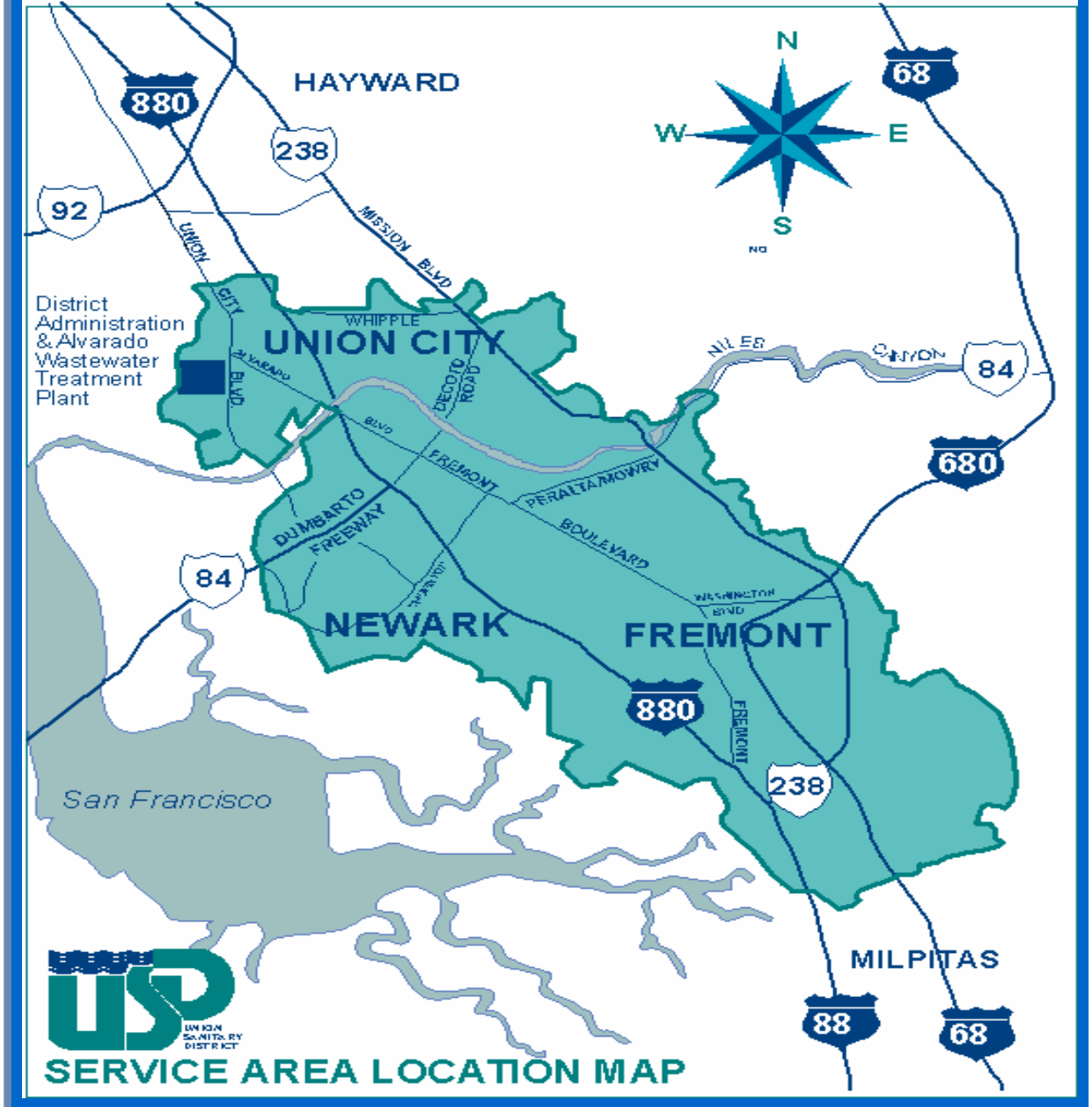

Union Sanitary District Sewer System Management Plan

Sewer System
Management Plan (SSMP)

Table of Contents

SSMP Background

a) Letter from SF Bay Regional Water Quality Control Board
b) Fact Sheet
c) MRP – Monitoring Reporting Programs
d) GWDR – General Water Discharge Requirements

Elements of SSMP

(i) Goals
(ii) Organization
(iii) Legal Authority
(iv.) Operation & Maintenance Program
  a. CS Map
  b. GIS Integration Layers
  c. USD Transport System Schematic
  d. USD Block Book Grid
  e. Fiscal Operating Budget
  f. CS PMP Programs
  g. Fiscal Training Plan
  h. Contingency Equip-Replacement Inventories
  i. Vehicle-Equip Renew-Replacement
  j. Public Notices/Newsletters
  k. Preventing Spills-Impact to Environment Brochure
  l. Traps & Vents Brochure
(v) Design & Performance Provisions
(vi) Overflow Emergency Response Plan
(vii) FOG Control Program
(viii) System Evaluation & Capacity Assurance Plan
(ix) Monitoring, Measuring & Program Modifications
(x) SSMP Program Audits
(xi) Communication Program
(xii) Certification

Sewer System Management Plan (SSMP)

B a c k g r o u n d

In July 2005, the San Francisco Bay Regional Water Quality Control Board issued a letter requiring Sanitary Sewer Collection System Agencies to prepare an SSMP.

Union Sanitary District had already been addressing all of the elements identified in the SSMP Development Guide. Since the SSMP elements already existed, the original version of USD's SSMP summarized existing programs and documents in the format outlined in the SSMP Development Guide.

In May 2006, the State Water Board adopted the GWDR (General Waste Discharge Requirements for Wastewater Collection Agencies). The GWDR contains requirements that differ slightly from the SF Bay Region's requirements.

On September 29, 2006, the San Francisco Bay Regional Water Quality Control Board issued a letter outlining the differences and explaining that only one SSMP is required and it must meet requirements of both the State's GWDR and the SSMP Development Guide.

In July 2007, we updated our existing SSMP to the format outlined by the State's GWDR, and the Board of Directors certified it as required.

CALIFORNIA
Water Boards

EDMUND G. BROWN JR.
GOVERNOR

MATTHEW RODRIGUEZ
SECRETARY FOR
ENVIRONMENTAL PROTECTION

State Water Resources Control Board

July 26, 2013

All Enrollees Subject to the Statewide General Waste Discharge Requirements for Sanitary Sewer Systems

Dear Enrollees:

AMENDMENT OF STATEWIDE MONITORING AND REPORTING PROGRAM (MRP) REQUIREMENTS FOR SANITARY SEWER OVERFLOWS; MRP ORDER 2006-0003-DWQ

Effective September 9, 2013, the MRP for the Statewide General Waste Discharge Requirements for Sanitary Sewer Systems (Order 2006-0003-DWQ) are amended. The amendments to the MRP set forth in Order 2013-0058-EXEC address compliance and enforceability in the existing MRP. The amendments additionally address stakeholder concern regarding cost of compliance issues. A copy of the amending Order and corresponding Fact Sheet describing my Executive Officer action, are enclosed.

Monitoring and reporting requirements in MRP Order 2008-0002-EXEC that have been effective since 2008 are superseded by the amended requirements set forth in Order 2013-0058-EXEC. If you have any questions regarding these amendments, please contact Russell Norman, Water Resource Control Engineer at (916) 323-5598 or rnorman@waterboards.ca.gov.

Sincerely,

Thomas Howard

Thomas Howard
Executive Director

Enclosures

cc: Regional Water Quality Control Board Executive Officers

Fact Sheet

STATE WATER RESOURCES CONTROL BOARD | 1001 I Street, Sacramento, CA 95814 | Mailing Address: P. O. Box 100, Sacramento, CA 95812-0100 | www.waterboards.ca.gov

AMENDED MONITORING AND REPORTING PROGRAM FOR THE STATEWIDE GENERAL WASTE DISCHARGE REQUIREMENTS FOR SANITARY SEWER SYSTEMS

BACKGROUND

Water Code section 13193 (2001, A.B. 285) requires the State Water Resources Control Board (State Water Board) and Regional Water Quality Control Boards (collectively Water Boards) to gather comprehensive and specific Sanitary Sewer Overflow (SSO) information. Water Code section 13193 also requires the Water Boards to make available to the public information including but not limited to the cause, estimated volume, location, date, time, and duration of the SSO; whether the SSO reached or may have reached surface waters; the response and corrective action taken by the collection system owner or operator (hereafter, Enrollee) for each SSO event; and the contact information for each Enrollee.

On May 2, 2006 the State Water Board adopted Water Quality Order 2006-0003-DWQ, "Statewide Waste Discharge Requirements for Sanitary Sewer Systems" (hereafter, SSS WDRs) to address Water Code section 13193 requirements and develop the framework for the statewide Sanitary Sewer Overflow Reduction Program. The SSS WDRs' Monitoring and Reporting Program (MRP) includes specific SSO notification and reporting and record keeping requirements to meet SSO reporting requirements in the Water Code and facilitate compliance monitoring and enforcement for violations.

The State Water Board Executive Officer issued a revised MRP for the SSS WDRs on February 20, 2008 to rectify notification deficiencies that occurred early in program implementation and to ensure that first responders (e.g., Water Boards, California Office of Emergency Services, and County Health Departments) are notified in a timely manner for SSOs discharged to surface waters. Based on over six years of implementation of the SSS WDRs, the State Water Board concluded that the February 20, 2008 revised MRP is no longer adequate to advance the Sanitary Sewer Overflow Reduction Program objectives, assess compliance, and enforce the requirements of the SSS WDRs.

Following its January 24, 2012 workshop with stakeholders for the review and update of the SSS WDRs, the State Water Board directed staff to review and evaluate the existing monitoring and reporting requirements and prepare an amended MRP for the Executive Director's issuance. Staff worked with the key stakeholders (e.g., California Association of Sanitation Agencies) to revise the monitoring and reporting requirements. State Water Board staff distributed the draft versions of the MRP to all stakeholders registered on the Lyris e-mail list for the Sanitary Sewer Overflow Reduction Program, solicited comments on the draft versions of the MRP in January and March 2013, and considered all comments received in developing the final revised MRP.

INSPECTION AND AUDIT FINDINGS

Since January 2007, numerous violations of the SSS WDRs have been documented by the Water Boards through data review, compliance monitoring, and onsite inspections. The most common violations related to the MRP that the Water Boards have documented are:

- Failure to properly estimate and report SSO volumes discharged and recovered [violation of section G of the SSS WDRs]
- Failure of the Enrollee to comply with all minimum MRP record keeping requirements [violation of section G of the SSS WDRs]
- Failure of the Enrollee to implement feasible alternatives and actions necessary to identify and correct problems causing SSOs [violation of subsection D.6 of the SSS WDRs]
- Unauthorized use of legally responsible official's SSO Online Database login password and electronic signature; [violation of section J of the SSS WDRs]
- Failure of the Enrollee to develop and/or implement an Overflow Emergency Response Plan to ensure all reasonable steps are taken to contain and prevent the discharge of untreated and partially treated wastewater to waters of the United States and to minimize or correct any adverse impact on the environment resulting from the SSOs, including accelerated or additional monitoring necessary to determine the nature and impact of the SSO [violation of subsection D.13(vi) of the SSS WDRs]
- Failure of the Enrollee to implement required training for sewer system operators and contractors [violation of subsections D.13(iv) and D.13(vi) of the SSS WDRs]

Amendments made to the MRP in Order 2013-0058-EXEC address these and other issues that have become apparent in the implementation of the SSS WDRs in over six years.

MONITORING AND REPORTING PROGRAM AMENDMENTS

State Water Board staff and other members of the Data Review Committee reviewed the current SSS WDRs reporting requirements as part of the SSS WDRs review and update process. The Data Review Committee is open to all stakeholders. Consequently, enrollees, non-governmental organizations, and other agencies have participated. As a result of this process, new reporting requirements have been developed that address the compliance and enforcement issues noted above and improve the quality and usefulness of SSO data collected.

While the proposed changes streamline the reporting process overall, some fields have been added to the reports. These additions address critical information gaps in the current reporting that have been identified both internally and by stakeholders.

For example, many enrollees have noted that we need to be able to separate sewer lateral spills from spills occurring in other asset types like main lines or pump stations. The "where did the failure occur" question on the electronic spill report form was not a required field in the original or revised 2008 MRP. Many SSO reports do not have this information, thus, we cannot differentiate lateral spills from main line, pump station, or other types of spills. This is one example of the additions in the required data entry that have been addressed in the 2013 MRP revisions.

The following is a summary of major changes made to the existing MRP (Order 2008-0002-EXEC) and incorporated in the final revised MRP (Order 2013-0058-EXEC):

1. Change in Notification Requirement for spills that reach surface water:

    - Three notification calls were required (California Office of Emergency Services, Regional Water Quality Control Boards, and local Health Departments). Required notification has been changed to call California Office of Emergency Services (Cal OES) only since Cal OES notifies the Regional Water Quality Control Boards and local Health Departments when a spill notification is received.

    - Elimination of requirement to submit a certification to Regional Water Quality Control Boards within 24 hours of making notification calls.

    - Alignment of notification requirement with California Code of Regulations section 2250, Reportable Quantity of Sewage, by requiring notification calls for only spills of 1,000 gallons or more. Notification of Cal OES was required for all spills to surface water.

    - Addition of requirement to update Cal OES when there are substantial changes to previously reported spill volume estimates or impacts.

2. Defined new spill categories and refined spill report fields:

    - Replacement of spill Categories 1 and 2 with Categories 1, 2, and 3. Spills are now classified as follows:

        - Category 1 – Spills of any volume that reach surface water

        - Category 2 – Spills greater than or equal to 1,000 gallons that do not reach surface water

        - Category 3 (formerly Category 2) – Spills less than 1,000 gallons that do not reach surface water

    All spills to surface water will be in a distinct category with this change. Spill reporting fields were refined and streamlined with stakeholder input.

3. Addition of requirement to submit a technical report within 45 days of the end date for spills to surface water over 50,000 gallons.

4. Addition of requirement for all Permit enrollees to develop a Water Quality Monitoring plan to be implemented within 48 hours after initial notification for spills where 50,000 gallons or more reach surface water.

5. Addition of requirement for Permit enrollees to submit an electronic copy of their Sewer System Management Plan (SSMP) or provide the web address where their SSMP is posted.

6. Addition of enhanced record keeping requirements.

7. Elimination of requirement to certify Private Lateral Sewer Discharge reports.

8. Addition of a 120-day time limit for amending and re-certifying spill reports.

STATE OF CALIFORNIA
WATER RESOURCES CONTROL BOARD
ORDER NO. WQ 2013-0058-EXEC

AMENDING MONITORING AND REPORTING PROGRAM
FOR
STATEWIDE GENERAL WASTE DISCHARGE REQUIREMENTS FOR
SANITARY SEWER SYSTEMS

The State of California, Water Resources Control Board (hereafter State Water Board) finds:

1. The State Water Board is authorized to prescribe statewide general Waste Discharge Requirements (WDRs) for categories of discharges that involve the same or similar operations and the same or similar types of waste pursuant to Water Code section 13263(i).

2. Water Code section 13193 *et seq.* requires the Regional Water Quality Control Boards (Regional Water Boards) and the State Water Board (collectively, the Water Boards) to gather Sanitary Sewer Overflow (SSO) information and make this information available to the public, including but not limited to, SSO cause, estimated volume, location, date, time, duration, whether or not the SSO reached or may have reached waters of the state, response and corrective action taken, and an enrollee's contact information for each SSO event. An enrollee is defined as the public entity having legal authority over the operation and maintenance of, or capital improvements to, a sanitary sewer system greater than one mile in length.

3. Water Code section 13271, *et seq.* requires notification to the California Office of Emergency Services (Cal OES), formerly the California Emergency Management Agency, for certain unauthorized discharges, including SSOs.

4. On May 2, 2006, the State Water Board adopted Order 2006-0003-DWQ, "Statewide Waste Discharge Requirements for Sanitary Sewer Systems"[1] (hereafter SSS WDRs) to comply with Water Code section 13193 and to establish the framework for the statewide SSO Reduction Program.

5. Subsection G.2 of the SSS WDRs and the Monitoring and Reporting Program (MRP) provide that the Executive Director may modify the terms of the MRP at any time.

6. On February 20, 2008, the State Water Board Executive Director adopted a revised MRP for the SSS WDRs to rectify early notification deficiencies and ensure that first responders are notified in a timely manner of SSOs discharged into waters of the state.

7. When notified of an SSO that reaches a drainage channel or surface water of the state, Cal OES, pursuant to Water Code section 13271(a)(3), forwards the SSO notification information[2] to local government agencies and first responders including local public health officials and the applicable Regional Water Board. Receipt of notifications for a single SSO event from both the SSO reporter

---

[1] Available for download at:
http://www.waterboards.ca.gov/board_decisions/adopted_orders/water_quality/2006/wqo/wqo2006_0003.pdf

[2] Cal OES Hazardous Materials Spill Reports available Online at:
http://w3.calema.ca.gov/operational/malhaz.nsf/$defaultview and http://w3.calema.ca.gov/operational/malhaz.nsf

and Cal OES is duplicative. To address this, the SSO notification requirements added by the February 20, 2008 MRP revision are being removed in this MRP revision.

8. In the February 28, 2008 Memorandum of Agreement between the State Water Board and the California Water and Environment Association (CWEA), the State Water Board committed to re-designing the CIWQS[3] Online SSO Database to allow "event" based SSO reporting versus the original "location" based reporting. Revisions to this MRP and accompanying changes to the CIWQS Online SSO Database will implement this change by allowing for multiple SSO appearance points to be associated with each SSO event caused by a single asset failure.

9. Based on stakeholder input and Water Board staff experience implementing the SSO Reduction Program, SSO categories have been revised in this MRP. In the prior version of the MRP, SSOs have been categorized as Category 1 or Category 2. This MRP implements changes to SSO categories by adding a Category 3 SSO type. This change will improve data management to further assist Water Board staff with evaluation of high threat and low threat SSOs by placing them in unique categories (i.e., Category 1 and Category 3, respectively). This change will also assist enrollees in identifying SSOs that require Cal OES notification.

10. Based on over six years of implementation of the SSS WDRs, the State Water Board concludes that the February 20, 2008 MRP must be updated to better advance the SSO Reduction Program[4] objectives, assess compliance, and enforce the requirements of the SSS WDRs.

IT IS HEREBY ORDERED THAT:

Pursuant to the authority delegated by Water Code section 13267(f), Resolution 2002-0104, and Order 2006-0003-DWQ, the MRP for the SSS WDRs (Order 2006-0003-DWQ) is hereby amended as shown in Attachment A and shall be effective on September 9, 2013.

8/6/13
Date

Thomas Howard
Executive Director

[3] California Integrated Water Quality System (CIWQS) publicly available at http://www.waterboards.ca.gov/ciwqs/publicreports.shtml

[4] Statewide Sanitary Sewer Overflow Reduction Program information is available at: http://www.waterboards.ca.gov/water_issues/programs/sso/

ATTACHMENT A

STATE WATER RESOURCES CONTROL BOARD
ORDER NO. WQ 2013-0058-EXEC

AMENDING MONITORING AND REPORTING PROGRAM
FOR
STATEWIDE GENERAL WASTE DISCHARGE REQUIREMENTS FOR
SANITARY SEWER SYSTEMS

This Monitoring and Reporting Program (MRP) establishes monitoring, record keeping, reporting and public notification requirements for Order 2006-0003-DWQ, "Statewide General Waste Discharge Requirements for Sanitary Sewer Systems" (SSS WDRs). This MRP shall be effective from September 9, 2013 until it is rescinded. The Executive Director may make revisions to this MRP at any time. These revisions may include a reduction or increase in the monitoring and reporting requirements. All site specific records and data developed pursuant to the SSS WDRs and this MRP shall be complete, accurate, and justified by evidence maintained by the enrollee. Failure to comply with this MRP may subject an enrollee to civil liabilities of up to $5,000 a day per violation pursuant to Water Code section 13350; up to $1,000 a day per violation pursuant to Water Code section 13268; or referral to the Attorney General for judicial civil enforcement. The State Water Resources Control Board (State Water Board) reserves the right to take any further enforcement action authorized by law.

A. SUMMARY OF MRP REQUIREMENTS

Table 1 – Spill Categories and Definitions

CATEGORIES	DEFINITIONS [see Section A on page 5 of Order 2006-0003-DWQ, for Sanitary Sewer Overflow (SSO) definition]
CATEGORY 1	Discharges of untreated or partially treated wastewater of **any volume** resulting from an enrollee's sanitary sewer system failure or flow condition that: • Reach surface water and/or reach a drainage channel tributary to a surface water; or • Reach a Municipal Separate Storm Sewer System (MS4) and are not fully captured and returned to the sanitary sewer system or not otherwise captured and disposed of properly. Any volume of wastewater not recovered from the MS4 is considered to have reached surface water unless the storm drain system discharges to a dedicated storm water or groundwater infiltration basin (e.g., infiltration pit, percolation pond).
CATEGORY 2	Discharges of untreated or partially treated wastewater of **1,000 gallons or greater** resulting from an enrollee's sanitary sewer system failure or flow condition that **do not** reach surface water, a drainage channel, or a MS4 unless the entire SSO discharged to the storm drain system is fully recovered and disposed of properly.
CATEGORY 3	All other discharges of untreated or partially treated wastewater resulting from an enrollee's sanitary sewer system failure or flow condition.
PRIVATE LATERAL SEWAGE DISCHARGE (PLSD)	Discharges of untreated or partially treated wastewater resulting from blockages or other problems **within a privately owned sewer lateral** connected to the enrollee's sanitary sewer system or from other private sewer assets. PLSDs that the enrollee becomes aware of may be voluntarily reported to the California Integrated Water Quality System (CIWQS) Online SSO Database.

Table 2 – Notification, Reporting, Monitoring, and Record Keeping Requirements

ELEMENT	REQUIREMENT	METHOD
NOTIFICATION **(see section B of MRP)**	• Within two hours of becoming aware of any Category 1 SSO **greater than or equal to 1,000 gallons discharged to surface water or spilled in a location where it probably will be discharged to surface water**, notify the California Office of Emergency Services (Cal OES) and obtain a notification control number.	Call Cal OES at: **(800) 852-7550**
REPORTING **(see section C of MRP)**	• Category 1 SSO: Submit draft report within three business days of becoming aware of the SSO and certify within 15 calendar days of SSO end date. • Category 2 SSO: Submit draft report within 3 business days of becoming aware of the SSO and certify within 15 calendar days of the SSO end date. • Category 3 SSO: Submit certified report within 30 calendar days of the end of month in which SSO the occurred. • SSO Technical Report: Submit within 45 calendar days after the end date of any Category 1 SSO in which 50,000 gallons or greater are spilled to surface waters. • "No Spill" Certification: Certify that no SSOs occurred within 30 calendar days of the end of the month or, if reporting quarterly, the quarter in which no SSOs occurred. • Collection System Questionnaire: Update and certify every 12 months.	Enter data into the CIWQS Online SSO Database (http://ciwqs.waterboards.ca.gov/), certified by enrollee's Legally Responsible Official(s).
WATER QUALITY MONITORING **(see section D of MRP)**	• Conduct water quality sampling **within 48 hours** after initial SSO notification for Category 1 SSOs in which 50,000 gallons or greater are spilled to surface waters.	Water quality results are required to be uploaded into CIWQS for Category 1 SSOs in which 50,000 gallons or greater are spilled to surface waters.
RECORD KEEPING **(see section E of MRP)**	• SSO event records. • Records documenting Sanitary Sewer Management Plan (SSMP) implementation and changes/updates to the SSMP. • Records to document Water Quality Monitoring for SSOs of 50,000 gallons or greater spilled to surface waters. • Collection system telemetry records if relied upon to document and/or estimate SSO Volume.	Self-maintained records shall be available during inspections or upon request.

B. NOTIFICATION REQUIREMENTS

Although Regional Water Quality Control Boards (Regional Water Boards) and the State Water Board (collectively, the Water Boards) staff do not have duties as first responders, this MRP is an appropriate mechanism to ensure that the agencies that have first responder duties are notified in a timely manner in order to protect public health and beneficial uses.

1. For any Category 1 SSO greater than or equal to 1,000 gallons that results in a discharge to a surface water or spilled in a location where it probably will be discharged to surface water, either directly or by way of a drainage channel or MS4, the enrollee shall, as soon as possible, but not later than two (2) hours after (A) the enrollee has knowledge of the discharge, (B) notification is possible, and (C) notification can be provided without substantially impeding cleanup or other emergency measures, notify the Cal OES and obtain a notification control number.

2. To satisfy notification requirements for each applicable SSO, the enrollee shall provide the information requested by Cal OES before receiving a control number. Spill information requested by Cal OES may include:

   i. Name of person notifying Cal OES and direct return phone number.
   ii. Estimated SSO volume discharged (gallons).
   iii. If ongoing, estimated SSO discharge rate (gallons per minute).
   iv. SSO Incident Description:
      a. Brief narrative.
      b. On-scene point of contact for additional information (name and cell phone number).
      c. Date and time enrollee became aware of the SSO.
      d. Name of sanitary sewer system agency causing the SSO.
      e. SSO cause (if known).
   v. Indication of whether the SSO has been contained.
   vi. Indication of whether surface water is impacted.
   vii. Name of surface water impacted by the SSO, if applicable.
   viii. Indication of whether a drinking water supply is or may be impacted by the SSO.
   ix. Any other known SSO impacts.
   x. SSO incident location (address, city, state, and zip code).

3. Following the initial notification to Cal OES and until such time that an enrollee certifies the SSO report in the CIWQS Online SSO Database, the enrollee shall provide updates to Cal OES regarding substantial changes to the estimated volume of untreated or partially treated sewage discharged and any substantial change(s) to known impact(s).

4. PLSDs: The enrollee is strongly encouraged to notify Cal OES of discharges greater than or equal to 1,000 gallons of untreated or partially treated wastewater that result or may result in a discharge to surface water resulting from failures or flow conditions within a privately owned sewer lateral or from other private sewer asset(s) if the enrollee becomes aware of the PLSD.

C. REPORTING REQUIREMENTS

1. **CIWQS Online SSO Database Account:** All enrollees shall obtain a CIWQS Online SSO Database account and receive a "Username" and "Password" by registering through CIWQS. These accounts allow controlled and secure entry into the CIWQS Online SSO Database.

2. **SSO Mandatory Reporting Information:** For reporting purposes, if one SSO event results in multiple appearance points in a sewer system asset, the enrollee shall complete one SSO report in the CIWQS Online SSO Database which includes the GPS coordinates for the location of the SSO appearance point closest to the failure point, blockage or location of the flow condition that caused the SSO, and provide descriptions of the locations of all other discharge points associated with the SSO event.

3. **SSO Categories**

   i. **Category 1** – Discharges of untreated or partially treated wastewater of any volume resulting from an enrollee's sanitary sewer system failure or flow condition that:

      a. Reach surface water and/or reach a drainage channel tributary to a surface water; or

      b. Reach a MS4 and are not fully captured and returned to the sanitary sewer system or not otherwise captured and disposed of properly. Any volume of wastewater not recovered from the MS4 is considered to have reached surface water unless the storm drain system discharges to a dedicated storm water or groundwater infiltration basin (e.g., infiltration pit, percolation pond).

   ii. **Category 2** – Discharges of untreated or partially treated wastewater greater than or equal to 1,000 gallons resulting from an enrollee's sanitary sewer system failure or flow condition that does not reach a surface water, a drainage channel, or the MS4 unless the entire SSO volume discharged to the storm drain system is fully recovered and disposed of properly.

   iii. **Category 3** – All other discharges of untreated or partially treated wastewater resulting from an enrollee's sanitary sewer system failure or flow condition.

4. **Sanitary Sewer Overflow Reporting to CIWQS - Timeframes**

   i. **Category 1 and Category 2 SSOs** – All SSOs that meet the above criteria for Category 1 or Category 2 SSOs shall be reported to the CIWQS Online SSO Database:

      a. Draft reports for Category 1 and Category 2 SSOs shall be submitted to the CIWQS Online SSO Database within three (3) business days of the enrollee becoming aware of the SSO. Minimum information that shall be reported in a draft Category 1 SSO report shall include all information identified in section 8.i.a. below. Minimum information that shall be reported in a Category 2 SSO draft report shall include all information identified in section 8.i.c below.

      b. A final Category 1 or Category 2 SSO report shall be certified through the CIWQS Online SSO Database within 15 calendar days of the end date of the SSO. Minimum information that shall be certified in the final Category 1 SSO report shall include all information identified in section 8.i.b below. Minimum information that shall be certified in a final Category 2 SSO report shall include all information identified in section 8.i.d below.

ii. **Category 3 SSOs** – All SSOs that meet the above criteria for Category 3 SSOs shall be reported to the CIWQS Online SSO Database and certified within 30 calendar days after the end of the calendar month in which the SSO occurs (e.g., all Category 3 SSOs occurring in the month of February shall be entered into the database and certified by March 30). Minimum information that shall be certified in a final Category 3 SSO report shall include all information identified in section 8.i.e below.

iii. **"No Spill" Certification** – If there are no SSOs during the calendar month, the enrollee shall either 1) certify, within 30 calendar days after the end of each calendar month, a "No Spill" certification statement in the CIWQS Online SSO Database certifying that there were no SSOs for the designated month, or 2) certify, quarterly within 30 calendar days after the end of each quarter, "No Spill" certification statements in the CIWQS Online SSO Database certifying that there were no SSOs for each month in the quarter being reported on. For quarterly reporting, the quarters are Q1 - January/ February/ March, Q2 - April/May/June, Q3 - July/August/September, and Q4 - October/November/December.

If there are no SSOs during a calendar month but the enrollee reported a PLSD, the enrollee shall still certify a "No Spill" certification statement for that month.

iv. **Amended SSO Reports** – The enrollee may update or add additional information to a certified SSO report within 120 calendar days after the SSO end date by amending the report or by adding an attachment to the SSO report in the CIWQS Online SSO Database. SSO reports certified in the CIWQS Online SSO Database prior to the adoption date of this MRP may only be amended up to 120 days after the effective date of this MRP. After 120 days, the enrollee may contact the SSO Program Manager to request to amend an SSO report if the enrollee also submits justification for why the additional information was not available prior to the end of the 120 days.

5. **SSO Technical Report**

The enrollee shall submit an SSO Technical Report in the CIWQS Online SSO Database within 45 calendar days of the SSO end date for any SSO in which 50,000 gallons or greater are spilled to surface waters. This report, which does not preclude the Water Boards from requiring more detailed analyses if requested, shall include at a minimum, the following:

i. **Causes and Circumstances of the SSO:**

a. Complete and detailed explanation of how and when the SSO was discovered.

b. Diagram showing the SSO failure point, appearance point(s), and final destination(s).

c. Detailed description of the methodology employed and available data used to calculate the volume of the SSO and, if applicable, the SSO volume recovered.

d. Detailed description of the cause(s) of the SSO.

e. Copies of original field crew records used to document the SSO.

f. Historical maintenance records for the failure location.

ii. **Enrollee's Response to SSO:**

a. Chronological narrative description of all actions taken by enrollee to terminate the spill.

b. Explanation of how the SSMP Overflow Emergency Response plan was implemented to respond to and mitigate the SSO.

c. Final corrective action(s) completed and/or planned to be completed, including a schedule for actions not yet completed.

iii. **Water Quality Monitoring:**

a. Description of all water quality sampling activities conducted including analytical results and evaluation of the results.

b. Detailed location map illustrating all water quality sampling points.

6. **PLSDs**

Discharges of untreated or partially treated wastewater resulting from blockages or other problems within a privately owned sewer lateral connected to the enrollee's sanitary sewer system or from other private sanitary sewer system assets may be voluntarily reported to the CIWQS Online SSO Database.

i. The enrollee is also encouraged to provide notification to Cal OES per section B above when a PLSD greater than or equal to 1,000 gallons has or may result in a discharge to surface water. For any PLSD greater than or equal to 1,000 gallons regardless of the spill destination, the enrollee is also encouraged to file a spill report as required by Health and Safety Code section 5410 et. seq. and Water Code section 13271, or notify the responsible party that notification and reporting should be completed as specified above and required by State law.

ii. If a PLSD is recorded in the CIWQS Online SSO Database, the enrollee must identify the sewage discharge as occurring and caused by a private sanitary sewer system asset and should identify a responsible party (other than the enrollee), if known. Certification of PLSD reports by enrollees is not required.

7. **CIWQS Online SSO Database Unavailability**

In the event that the CIWQS Online SSO Database is not available, the enrollee must fax or e-mail all required information to the appropriate Regional Water Board office in accordance with the time schedules identified herein. In such event, the enrollee must also enter all required information into the CIWQS Online SSO Database when the database becomes available.

8. **Mandatory Information to be Included in CIWQS Online SSO Reporting**

All enrollees shall obtain a CIWQS Online SSO Database account and receive a "Username" and "Password" by registering through CIWQS which can be reached at CIWQS@waterboards.ca.gov or by calling (866) 792-4977, M-F, 8 A.M. to 5 P.M. These accounts will allow controlled and secure entry into the CIWQS Online SSO Database. Additionally, within thirty (30) days of initial enrollment and prior to recording SSOs into the CIWQS Online SSO Database, all enrollees must complete a Collection System Questionnaire (Questionnaire). The Questionnaire shall be updated at least once every 12 months.

i. **SSO Reports**

At a minimum, the following mandatory information shall be reported prior to finalizing and certifying an SSO report for each category of SSO:

a. **Draft Category 1 SSOs**: At a minimum, the following mandatory information shall be reported for a draft Category 1 SSO report:

1. SSO Contact Information: Name and telephone number of enrollee contact person who can answer specific questions about the SSO being reported.
2. SSO Location Name.
3. Location of the overflow event (SSO) by entering GPS coordinates. If a single overflow event results in multiple appearance points, provide GPS coordinates for the appearance point closest to the failure point and describe each additional appearance point in the SSO appearance point explanation field.
4. Whether or not the SSO reached surface water, a drainage channel, or entered and was discharged from a drainage structure.
5. Whether or not the SSO reached a municipal separate storm drain system.
6. Whether or not the total SSO volume that reached a municipal separate storm drain system was fully recovered.
7. Estimate of the SSO volume, inclusive of all discharge point(s).
8. Estimate of the SSO volume that reached surface water, a drainage channel, or was not recovered from a storm drain.
9. Estimate of the SSO volume recovered (if applicable).
10. Number of SSO appearance point(s).
11. Description and location of SSO appearance point(s). If a single sanitary sewer system failure results in multiple SSO appearance points, each appearance point must be described.
12. SSO start date and time.
13. Date and time the enrollee was notified of, or self-discovered, the SSO.
14. Estimated operator arrival time.
15. For spills greater than or equal to 1,000 gallons, the date and time Cal OES was called.
16. For spills greater than or equal to 1,000 gallons, the Cal OES control number.

b. **Certified Category 1 SSOs**: At a minimum, the following mandatory information shall be reported for a certified Category 1 SSO report, in addition to all fields in section 8.i.a :

1. Description of SSO destination(s).
2. SSO end date and time.
3. SSO causes (mainline blockage, roots, etc.).
4. SSO failure point (main, lateral, etc.).
5. Whether or not the spill was associated with a storm event.
6. Description of spill corrective action, including steps planned or taken to reduce, eliminate, and prevent reoccurrence of the overflow; and a schedule of major milestones for those steps.
7. Description of spill response activities.
8. Spill response completion date.
9. Whether or not there is an ongoing investigation, the reasons for the investigation and the expected date of completion.

10. Whether or not a beach closure occurred or may have occurred as a result of the SSO.
11. Whether or not health warnings were posted as a result of the SSO.
12. Name of beach(es) closed and/or impacted. If no beach was impacted, NA shall be selected.
13. Name of surface water(s) impacted.
14. If water quality samples were collected, identify parameters the water quality samples were analyzed for. If no samples were taken, NA shall be selected.
15. If water quality samples were taken, identify which regulatory agencies received sample results (if applicable). If no samples were taken, NA shall be selected.
16. Description of methodology(ies) and type of data relied upon for estimations of the SSO volume discharged and recovered.
17. SSO Certification: Upon SSO Certification, the CIWQS Online SSO Database will issue a final SSO identification (ID) number.

c. **Draft Category 2 SSOs**: At a minimum, the following mandatory information shall be reported for a draft Category 2 SSO report:

1. Items 1-14 in section 8.i.a above for Draft Category 1 SSO.

d. **Certified Category 2 SSOs**: At a minimum, the following mandatory information shall be reported for a certified Category 2 SSO report:

1. Items 1-14 in section 8.i.a above for Draft Category 1 SSO and Items 1-9, and 17 in section 8.i.b above for Certified Category 1 SSO.

e. **Certified Category 3 SSOs**: At a minimum, the following mandatory information shall be reported for a certified Category 3 SSO report:

1. Items 1-14 in section 8.i.a above for Draft Category 1 SSO and Items 1-5, and 17 in section 8.i.b above for Certified Category 1 SSO.

ii. **Reporting SSOs to Other Regulatory Agencies**

These reporting requirements do not preclude an enrollee from reporting SSOs to other regulatory agencies pursuant to state law. In addition, these reporting requirements do not replace other Regional Water Board notification and reporting requirements for SSOs.

iii. **Collection System Questionnaire**

The required Questionnaire (see subsection G of the SSS WDRs) provides the Water Boards with site-specific information related to the enrollee's sanitary sewer system. The enrollee shall complete and certify the Questionnaire at least every 12 months to facilitate program implementation, compliance assessment, and enforcement response.

iv. **SSMP Availability**

The enrollee shall provide the publicly available internet web site address to the CIWQS Online SSO Database where a downloadable copy of the enrollee's approved SSMP, critical supporting documents referenced in the SSMP, and proof of local governing board approval of the SSMP is posted. If all of the SSMP documentation listed in this subsection is not publicly available on the Internet, the enrollee shall comply with the following procedure:

a. Submit an **electronic** copy of the enrollee's approved SSMP, critical supporting documents referenced in the SSMP, and proof of local governing board approval of the SSMP to the State Water Board, within 30 days of that approval and within 30 days of any subsequent SSMP re-certifications, to the following mailing address:

State Water Resources Control Board
Division of Water Quality
Attn: SSO Program Manager
1001 I Street, 15th Floor, Sacramento, CA 95814

D. WATER QUALITY MONITORING REQUIREMENTS:

To comply with subsection D.7(v) of the SSS WDRs, the enrollee shall develop and implement an SSO Water Quality Monitoring Program to assess impacts from SSOs to surface waters in which 50,000 gallons or greater are spilled to surface waters. The SSO Water Quality Monitoring Program, shall, at a minimum:

1. Contain protocols for water quality monitoring.

2. Account for spill travel time in the surface water and scenarios where monitoring may not be possible (e.g. safety, access restrictions, etc.).

3. Require water quality analyses for ammonia and bacterial indicators to be performed by an accredited or certified laboratory.

4. Require monitoring instruments and devices used to implement the SSO Water Quality Monitoring Program to be properly maintained and calibrated, including any records to document maintenance and calibration, as necessary, to ensure their continued accuracy.

5. Within 48 hours of the enrollee becoming aware of the SSO, require water quality sampling for, at a minimum, the following constituents:

   i. Ammonia

   ii. Appropriate Bacterial indicator(s) per the applicable Basin Plan water quality objective or Regional Board direction which may include total and fecal coliform, enterococcus, and e-coli.

E. RECORD KEEPING REQUIREMENTS:

The following records shall be maintained by the enrollee for a minimum of five (5) years and shall be made available for review by the Water Boards during an onsite inspection or through an information request:

1. General Records: The enrollee shall maintain records to document compliance with all provisions of the SSS WDRs and this MRP for each sanitary sewer system owned including any required records generated by an enrollee's sanitary sewer system contractor(s).

2. SSO Records: The enrollee shall maintain records for each SSO event, including but not limited to:

   i. Complaint records documenting how the enrollee responded to all notifications of possible or actual SSOs, both during and after business hours, including complaints that do not

result in SSOs. Each complaint record shall, at a minimum, include the following information:

a. Date, time, and method of notification.

b. Date and time the complainant or informant first noticed the SSO.

c. Narrative description of the complaint, including any information the caller can provide regarding whether or not the complainant or informant reporting the potential SSO knows if the SSO has reached surface waters, drainage channels or storm drains.

d. Follow-up return contact information for complainant or informant for each complaint received, if not reported anonymously.

e. Final resolution of the complaint.

ii. Records documenting steps and/or remedial actions undertaken by enrollee, using all available information, to comply with section D.7 of the SSS WDRs.

iii. Records documenting how all estimate(s) of volume(s) discharged and, if applicable, volume(s) recovered were calculated.

3. Records documenting all changes made to the SSMP since its last certification indicating when a subsection(s) of the SSMP was changed and/or updated and who authorized the change or update. These records shall be attached to the SSMP.

4. Electronic monitoring records relied upon for documenting SSO events and/or estimating the SSO volume discharged, including, but not limited to records from:

   i. Supervisory Control and Data Acquisition (SCADA) systems

   ii. Alarm system(s)

   iii. Flow monitoring device(s) or other instrument(s) used to estimate wastewater levels, flow rates and/or volumes.

F. CERTIFICATION

1. All information required to be reported into the CIWQS Online SSO Database shall be certified by a person designated as described in subsection J of the SSS WDRs. This designated person is also known as a Legally Responsible Official (LRO). An enrollee may have more than one LRO.

2. Any designated person (i.e. an LRO) shall be registered with the State Water Board to certify reports in accordance with the CIWQS protocols for reporting.

3. Data Submitter (DS): Any enrollee employee or contractor may enter draft data into the CIWQS Online SSO Database on behalf of the enrollee if authorized by the LRO and registered with the State Water Board. However, only LROs may certify reports in CIWQS.

4. The enrollee shall maintain continuous coverage by an LRO. Any change of a registered LRO or DS (e.g., retired staff), including deactivation or a change to the LRO's or DS's contact information, shall be submitted by the enrollee to the State Water Board within 30 days of the change by calling (866) 792-4977 or e-mailing help@ciwqs.waterboards.ca.gov.

5. A registered designated person (i.e., an LRO) shall certify all required reports under penalty of perjury laws of the state as stated in the CIWQS Online SSO Database at the time of certification.

CERTIFICATION

The undersigned Clerk to the Board does hereby certify that the foregoing is a full, true, and correct copy of an order amended by the Executive Director of the State Water Resources Control Board.

7/30/13
Date

Jeanine Townsend
Clerk to the Board

STATE WATER RESOURCES CONTROL BOARD
ORDER NO. 2006-0003

STATEWIDE GENERAL WASTE DISCHARGE REQUIREMENTS FOR SANITARY SEWER SYSTEMS

The State Water Resources Control Board, hereinafter referred to as "State Water Board", finds that:

1. All federal and state agencies, municipalities, counties, districts, and other public entities that own or operate sanitary sewer systems greater than one mile in length that collect and/or convey untreated or partially treated wastewater to a publicly owned treatment facility in the State of California are required to comply with the terms of this Order. Such entities are hereinafter referred to as "Enrollees".

2. Sanitary sewer overflows (SSOs) are overflows from sanitary sewer systems of domestic wastewater, as well as industrial and commercial wastewater, depending on the pattern of land uses in the area served by the sanitary sewer system. SSOs often contain high levels of suspended solids, pathogenic organisms, toxic pollutants, nutrients, oxygen-demanding organic compounds, oil and grease and other pollutants. SSOs may cause a public nuisance, particularly when raw untreated wastewater is discharged to areas with high public exposure, such as streets or surface waters used for drinking, fishing, or body contact recreation. SSOs may pollute surface or ground waters, threaten public health, adversely affect aquatic life, and impair the recreational use and aesthetic enjoyment of surface waters.

3. Sanitary sewer systems experience periodic failures resulting in discharges that may affect waters of the state. There are many factors (including factors related to geology, design, construction methods and materials, age of the system, population growth, and system operation and maintenance), which affect the likelihood of an SSO. A proactive approach that requires Enrollees to ensure a system-wide operation, maintenance, and management plan is in place will reduce the number and frequency of SSOs within the state. This approach will in turn decrease the risk to human health and the environment caused by SSOs.

4. Major causes of SSOs include: grease blockages, root blockages, sewer line flood damage, manhole structure failures, vandalism, pump station mechanical failures, power outages, excessive storm or ground water inflow/infiltration, debris blockages, sanitary sewer system age and construction material failures, lack of proper operation and maintenance, insufficient capacity and contractor-caused damages. Many SSOs are preventable with adequate and appropriate facilities, source control measures and operation and maintenance of the sanitary sewer system.

SEWER SYSTEM MANAGEMENT PLANS

5. To facilitate proper funding and management of sanitary sewer systems, each Enrollee must develop and implement a system-specific Sewer System Management Plan (SSMP). To be effective, SSMPs must include provisions to provide proper and efficient management, operation, and maintenance of sanitary sewer systems, while taking into consideration risk management and cost benefit analysis. Additionally, an SSMP must contain a spill response plan that establishes standard procedures for immediate response to an SSO in a manner designed to minimize water quality impacts and potential nuisance conditions.

6. Many local public agencies in California have already developed SSMPs and implemented measures to reduce SSOs. These entities can build upon their existing efforts to establish a comprehensive SSMP consistent with this Order. Others, however, still require technical assistance and, in some cases, funding to improve sanitary sewer system operation and maintenance in order to reduce SSOs.

7. SSMP certification by technically qualified and experienced persons can provide a useful and cost-effective means for ensuring that SSMPs are developed and implemented appropriately.

8. It is the State Water Board's intent to gather additional information on the causes and sources of SSOs to augment existing information and to determine the full extent of SSOs and consequent public health and/or environmental impacts occurring in the State.

9. Both uniform SSO reporting and a centralized statewide electronic database are needed to collect information to allow the State Water Board and Regional Water Quality Control Boards (Regional Water Boards) to effectively analyze the extent of SSOs statewide and their potential impacts on beneficial uses and public health. The monitoring and reporting program required by this Order and the attached **Monitoring and Reporting Program No. 2006-0003**, are necessary to assure compliance with these waste discharge requirements (WDRs).

10. Information regarding SSOs must be provided to Regional Water Boards and other regulatory agencies in a timely manner and be made available to the public in a complete, concise, and timely fashion.

11. Some Regional Water Boards have issued WDRs or WDRs that serve as National Pollution Discharge Elimination System (NPDES) permits to sanitary sewer system owners/operators within their jurisdictions. This Order establishes minimum requirements to prevent SSOs. Although it is the State Water Board's intent that this Order be the primary regulatory mechanism for sanitary sewer systems statewide, Regional Water Boards may issue more stringent or more

prescriptive WDRs for sanitary sewer systems. Upon issuance or reissuance of a Regional Water Board's WDRs for a system subject to this Order, the Regional Water Board shall coordinate its requirements with stated requirements within this Order, to identify requirements that are more stringent, to remove requirements that are less stringent than this Order, and to provide consistency in reporting.

REGULATORY CONSIDERATIONS

12. California Water Code section 13263 provides that the State Water Board may prescribe general WDRs for a category of discharges if the State Water Board finds or determines that:

    - The discharges are produced by the same or similar operations;
    - The discharges involve the same or similar types of waste;
    - The discharges require the same or similar treatment standards; and
    - The discharges are more appropriately regulated under general discharge requirements than individual discharge requirements.

    This Order establishes requirements for a class of operations, facilities, and discharges that are similar throughout the state.

13. The issuance of general WDRs to the Enrollees will:
    a) Reduce the administrative burden of issuing individual WDRs to each Enrollee;
    b) Provide for a unified statewide approach for the reporting and database tracking of SSOs;
    c) Establish consistent and uniform requirements for SSMP development and implementation;
    d) Provide statewide consistency in reporting; and
    e) Facilitate consistent enforcement for violations.

14. The beneficial uses of surface waters that can be impaired by SSOs include, but are not limited to, aquatic life, drinking water supply, body contact and non-contact recreation, and aesthetics. The beneficial uses of ground water that can be impaired include, but are not limited to, drinking water and agricultural supply. Surface and ground waters throughout the state support these uses to varying degrees.

15. The implementation of requirements set forth in this Order will ensure the reasonable protection of past, present, and probable future beneficial uses of water and the prevention of nuisance. The requirements implement the water quality control plans (Basin Plans) for each region and take into account the environmental characteristics of hydrographic units within the state. Additionally, the State Water Board has considered water quality conditions that could reasonably be achieved through the coordinated control of all factors that affect

water quality in the area, costs associated with compliance with these requirements, the need for developing housing within California, and the need to develop and use recycled water.

16. The Federal Clean Water Act largely prohibits any discharge of pollutants from a point source to waters of the United States except as authorized under an NPDES permit. In general, any point source discharge of sewage effluent to waters of the United States must comply with technology-based, secondary treatment standards, at a minimum, and any more stringent requirements necessary to meet applicable water quality standards and other requirements. Hence, the unpermitted discharge of wastewater from a sanitary sewer system to waters of the United States is illegal under the Clean Water Act. In addition, many Basin Plans adopted by the Regional Water Boards contain discharge prohibitions that apply to the discharge of untreated or partially treated wastewater. Finally, the California Water Code generally prohibits the discharge of waste to land prior to the filing of any required report of waste discharge and the subsequent issuance of either WDRs or a waiver of WDRs.

17. California Water Code section 13263 requires a water board to, after any necessary hearing, prescribe requirements as to the nature of any proposed discharge, existing discharge, or material change in an existing discharge. The requirements shall, among other things, take into consideration the need to prevent nuisance.

18. California Water Code section 13050, subdivision (m), defines nuisance as anything which meets all of the following requirements:
    a. Is injurious to health, or is indecent or offensive to the senses, or an obstruction to the free use of property, so as to interfere with the comfortable enjoyment of life or property.
    b. Affects at the same time an entire community or neighborhood, or any considerable number of persons, although the extent of the annoyance or damage inflicted upon individuals may be unequal.
    c. Occurs during, or as a result of, the treatment or disposal of wastes.

19. This Order is consistent with State Water Board Resolution No. 68-16 (Statement of Policy with Respect to Maintaining High Quality of Waters in California) in that the Order imposes conditions to prevent impacts to water quality, does not allow the degradation of water quality, will not unreasonably affect beneficial uses of water, and will not result in water quality less than prescribed in State Water Board or Regional Water Board plans and policies.

20. The action to adopt this General Order is exempt from the California Environmental Quality Act (Public Resources Code §21000 et seq.) because it is an action taken by a regulatory agency to assure the protection of the environment and the regulatory process involves procedures for protection of the environment. (Cal. Code Regs., tit. 14, §15308). In addition, the action to adopt

this Order is exempt from CEQA pursuant to Cal.Code Regs., title 14, §15301 to the extent that it applies to existing sanitary sewer collection systems that constitute "existing facilities" as that term is used in Section 15301, and §15302, to the extent that it results in the repair or replacement of existing systems involving negligible or no expansion of capacity.

21. The Fact Sheet, which is incorporated by reference in the Order, contains supplemental information that was also considered in establishing these requirements.

22. The State Water Board has notified all affected public agencies and all known interested persons of the intent to prescribe general WDRs that require Enrollees to develop SSMPs and to report all SSOs.

23. The State Water Board conducted a public hearing on February 8, 2006, to receive oral and written comments on the draft order. The State Water Board received and considered, at its May 2, 2006, meeting, additional public comments on substantial changes made to the proposed general WDRs following the February 8, 2006, public hearing. The State Water Board has considered all comments pertaining to the proposed general WDRs.

IT IS HEREBY ORDERED, that pursuant to California Water Code section 13263, the Enrollees, their agents, successors, and assigns, in order to meet the provisions contained in Division 7 of the California Water Code and regulations adopted hereunder, shall comply with the following:

A. DEFINITIONS

1. **Sanitary sewer overflow (SSO)** - Any overflow, spill, release, discharge or diversion of untreated or partially treated wastewater from a sanitary sewer system. SSOs include:
   (i) Overflows or releases of untreated or partially treated wastewater that reach waters of the United States;
   (ii) Overflows or releases of untreated or partially treated wastewater that do not reach waters of the United States; and
   (iii) Wastewater backups into buildings and on private property that are caused by blockages or flow conditions within the publicly owned portion of a sanitary sewer system.

2. **Sanitary sewer system** – Any system of pipes, pump stations, sewer lines, or other conveyances, upstream of a wastewater treatment plant headworks used to collect and convey wastewater to the publicly owned treatment facility. Temporary storage and conveyance facilities (such as vaults, temporary piping, construction trenches, wet wells, impoundments, tanks, etc.) are considered to be part of the sanitary sewer system, and discharges into these temporary storage facilities are not considered to be SSOs.

For purposes of this Order, sanitary sewer systems include only those systems owned by public agencies that are comprised of more than one mile of pipes or sewer lines.

3. **Enrollee** - A federal or state agency, municipality, county, district, and other public entity that owns or operates a sanitary sewer system, as defined in the general WDRs, and that has submitted a complete and approved application for coverage under this Order.

4. **SSO Reporting System** – Online spill reporting system that is hosted, controlled, and maintained by the State Water Board. The web address for this site is http://ciwqs.waterboards.ca.gov. This online database is maintained on a secure site and is controlled by unique usernames and passwords.

5. **Untreated or partially treated wastewater** – Any volume of waste discharged from the sanitary sewer system upstream of a wastewater treatment plant headworks.

6. **Satellite collection system** – The portion, if any, of a sanitary sewer system owned or operated by a different public agency than the agency that owns and operates the wastewater treatment facility to which the sanitary sewer system is tributary.

7. **Nuisance** - California Water Code section 13050, subdivision (m), defines nuisance as anything which meets all of the following requirements:
    a. Is injurious to health, or is indecent or offensive to the senses, or an obstruction to the free use of property, so as to interfere with the comfortable enjoyment of life or property.
    b. Affects at the same time an entire community or neighborhood, or any considerable number of persons, although the extent of the annoyance or damage inflicted upon individuals may be unequal.
    c. Occurs during, or as a result of, the treatment or disposal of wastes.

B. APPLICATION REQUIREMENTS

1. Deadlines for Application – All public agencies that currently own or operate sanitary sewer systems within the State of California must apply for coverage under the general WDRs within six (6) months of the date of adoption of the general WDRs. Additionally, public agencies that acquire or assume responsibility for operating sanitary sewer systems after the date of adoption of this Order must apply for coverage under the general WDRs at least three (3) months prior to operation of those facilities.

2. Applications under the general WDRs – In order to apply for coverage pursuant to the general WDRs, a legally authorized representative for each agency must submit a complete application package. Within sixty (60) days of adoption of the general WDRs, State Water Board staff will send specific instructions on how to

apply for coverage under the general WDRs to all known public agencies that own sanitary sewer systems. Agencies that do not receive notice may obtain applications and instructions online on the Water Board's website.

3. Coverage under the general WDRs – Permit coverage will be in effect once a complete application package has been submitted and approved by the State Water Board's Division of Water Quality.

C. PROHIBITIONS

1. Any SSO that results in a discharge of untreated or partially treated wastewater to waters of the United States is prohibited.

2. Any SSO that results in a discharge of untreated or partially treated wastewater that creates a nuisance as defined in California Water Code Section 13050(m) is prohibited.

D. PROVISIONS

1. The Enrollee must comply with all conditions of this Order. Any noncompliance with this Order constitutes a violation of the California Water Code and is grounds for enforcement action.

2. It is the intent of the State Water Board that sanitary sewer systems be regulated in a manner consistent with the general WDRs. Nothing in the general WDRs shall be:

   (i) Interpreted or applied in a manner inconsistent with the Federal Clean Water Act, or supersede a more specific or more stringent state or federal requirement in an existing permit, regulation, or administrative/judicial order or Consent Decree;
   (ii) Interpreted or applied to authorize an SSO that is illegal under either the Clean Water Act, an applicable Basin Plan prohibition or water quality standard, or the California Water Code;
   (iii) Interpreted or applied to prohibit a Regional Water Board from issuing an individual NPDES permit or WDR, superseding this general WDR, for a sanitary sewer system, authorized under the Clean Water Act or California Water Code; or
   (iv) Interpreted or applied to supersede any more specific or more stringent WDRs or enforcement order issued by a Regional Water Board.

3. The Enrollee shall take all feasible steps to eliminate SSOs. In the event that an SSO does occur, the Enrollee shall take all feasible steps to contain and mitigate the impacts of an SSO.

4. In the event of an SSO, the Enrollee shall take all feasible steps to prevent untreated or partially treated wastewater from discharging from storm drains into

flood control channels or waters of the United States by blocking the storm drainage system and by removing the wastewater from the storm drains.

5. All SSOs must be reported in accordance with Section G of the general WDRs.

6. In any enforcement action, the State and/or Regional Water Boards will consider the appropriate factors under the duly adopted State Water Board Enforcement Policy. And, consistent with the Enforcement Policy, the State and/or Regional Water Boards must consider the Enrollee's efforts to contain, control, and mitigate SSOs when considering the California Water Code Section 13327 factors. In assessing these factors, the State and/or Regional Water Boards will also consider whether:

   (i) The Enrollee has complied with the requirements of this Order, including requirements for reporting and developing and implementing a SSMP;

   (ii) The Enrollee can identify the cause or likely cause of the discharge event;

   (iii) There were no feasible alternatives to the discharge, such as temporary storage or retention of untreated wastewater, reduction of inflow and infiltration, use of adequate backup equipment, collecting and hauling of untreated wastewater to a treatment facility, or an increase in the capacity of the system as necessary to contain the design storm event identified in the SSMP. It is inappropriate to consider the lack of feasible alternatives, if the Enrollee does not implement a periodic or continuing process to identify and correct problems.

   (iv) The discharge was exceptional, unintentional, temporary, and caused by factors beyond the reasonable control of the Enrollee;

   (v) The discharge could have been prevented by the exercise of reasonable control described in a certified SSMP for:
   - Proper management, operation and maintenance;
   - Adequate treatment facilities, sanitary sewer system facilities, and/or components with an appropriate design capacity, to reasonably prevent SSOs (e.g., adequately enlarging treatment or collection facilities to accommodate growth, infiltration and inflow (I/I), etc.);
   - Preventive maintenance (including cleaning and fats, oils, and grease (FOG) control);
   - Installation of adequate backup equipment; and
   - Inflow and infiltration prevention and control to the extent practicable.

   (vi) The sanitary sewer system design capacity is appropriate to reasonably prevent SSOs.

(vii) The Enrollee took all reasonable steps to stop and mitigate the impact of the discharge as soon as possible.

7. When a sanitary sewer overflow occurs, the Enrollee shall take all feasible steps and necessary remedial actions to 1) control or limit the volume of untreated or partially treated wastewater discharged, 2) terminate the discharge, and 3) recover as much of the wastewater discharged as possible for proper disposal, including any wash down water.

   The Enrollee shall implement all remedial actions to the extent they may be applicable to the discharge and not inconsistent with an emergency response plan, including the following:

   (i) Interception and rerouting of untreated or partially treated wastewater flows around the wastewater line failure;
   (ii) Vacuum truck recovery of sanitary sewer overflows and wash down water;
   (iii) Cleanup of debris at the overflow site;
   (iv) System modifications to prevent another SSO at the same location;
   (v) Adequate sampling to determine the nature and impact of the release; and
   (vi) Adequate public notification to protect the public from exposure to the SSO.

8. The Enrollee shall properly, manage, operate, and maintain all parts of the sanitary sewer system owned or operated by the Enrollee, and shall ensure that the system operators (including employees, contractors, or other agents) are adequately trained and possess adequate knowledge, skills, and abilities.

9. The Enrollee shall allocate adequate resources for the operation, maintenance, and repair of its sanitary sewer system, by establishing a proper rate structure, accounting mechanisms, and auditing procedures to ensure an adequate measure of revenues and expenditures. These procedures must be in compliance with applicable laws and regulations and comply with generally acceptable accounting practices.

10. The Enrollee shall provide adequate capacity to convey base flows and peak flows, including flows related to wet weather events. Capacity shall meet or exceed the design criteria as defined in the Enrollee's System Evaluation and Capacity Assurance Plan for all parts of the sanitary sewer system owned or operated by the Enrollee.

11. The Enrollee shall develop and implement a written Sewer System Management Plan (SSMP) and make it available to the State and/or Regional Water Board upon request. A copy of this document must be publicly available at the Enrollee's office and/or available on the Internet. This SSMP must be approved by the Enrollee's governing board at a public meeting.

12. In accordance with the California Business and Professions Code sections 6735, 7835, and 7835.1, all engineering and geologic evaluations and judgments shall be performed by or under the direction of registered professionals competent and proficient in the fields pertinent to the required activities. Specific elements of the SSMP that require professional evaluation and judgments shall be prepared by or under the direction of appropriately qualified professionals, and shall bear the professional(s)' signature and stamp.

13. The mandatory elements of the SSMP are specified below. However, if the Enrollee believes that any element of this section is not appropriate or applicable to the Enrollee's sanitary sewer system, the SSMP program does not need to address that element. The Enrollee must justify why that element is not applicable. The SSMP must be approved by the deadlines listed in the SSMP Time Schedule below.

Sewer System Management Plan (SSMP)

(i) **Goal**: The goal of the SSMP is to provide a plan and schedule to properly manage, operate, and maintain all parts of the sanitary sewer system. This will help reduce and prevent SSOs, as well as mitigate any SSOs that do occur.

(ii) **Organization**: The SSMP must identify:

(a) The name of the responsible or authorized representative as described in Section J of this Order.

(b) The names and telephone numbers for management, administrative, and maintenance positions responsible for implementing specific measures in the SSMP program. The SSMP must identify lines of authority through an organization chart or similar document with a narrative explanation; and

(c) The chain of communication for reporting SSOs, from receipt of a complaint or other information, including the person responsible for reporting SSOs to the State and Regional Water Board and other agencies if applicable (such as County Health Officer, County Environmental Health Agency, Regional Water Board, and/or State Office of Emergency Services (OES)).

(iii) **Legal Authority:** Each Enrollee must demonstrate, through sanitary sewer system use ordinances, service agreements, or other legally binding procedures, that it possesses the necessary legal authority to:

(a) Prevent illicit discharges into its sanitary sewer system (examples may include I/I, stormwater, chemical dumping, unauthorized debris and cut roots, etc.);

(b) Require that sewers and connections be properly designed and constructed;

(c) Ensure access for maintenance, inspection, or repairs for portions of the lateral owned or maintained by the Public Agency;

(d) Limit the discharge of fats, oils, and grease and other debris that may cause blockages, and

(e) Enforce any violation of its sewer ordinances.

(iv) **Operation and Maintenance Program**. The SSMP must include those elements listed below that are appropriate and applicable to the Enrollee's system:

(a) Maintain an up-to-date map of the sanitary sewer system, showing all gravity line segments and manholes, pumping facilities, pressure pipes and valves, and applicable stormwater conveyance facilities;

(b) Describe routine preventive operation and maintenance activities by staff and contractors, including a system for scheduling regular maintenance and cleaning of the sanitary sewer system with more frequent cleaning and maintenance targeted at known problem areas. The Preventative Maintenance (PM) program should have a system to document scheduled and conducted activities, such as work orders;

(c) Develop a rehabilitation and replacement plan to identify and prioritize system deficiencies and implement short-term and long-term rehabilitation actions to address each deficiency. The program should include regular visual and TV inspections of manholes and sewer pipes, and a system for ranking the condition of sewer pipes and scheduling rehabilitation. Rehabilitation and replacement should focus on sewer pipes that are at risk of collapse or prone to more frequent blockages due to pipe defects. Finally, the rehabilitation and replacement plan should include a capital improvement plan that addresses proper management and protection of the infrastructure assets. The plan shall include a time schedule for implementing the short- and long-term plans plus a schedule for developing the funds needed for the capital improvement plan;

(d) Provide training on a regular basis for staff in sanitary sewer system operations and maintenance, and require contractors to be appropriately trained; and

(e) Provide equipment and replacement part inventories, including identification of critical replacement parts.

(v) **Design and Performance Provisions**:

(a) Design and construction standards and specifications for the installation of new sanitary sewer systems, pump stations and other appurtenances; and for the rehabilitation and repair of existing sanitary sewer systems; and

(b) Procedures and standards for inspecting and testing the installation of new sewers, pumps, and other appurtenances and for rehabilitation and repair projects.

(vi) **Overflow Emergency Response Plan -** Each Enrollee shall develop and implement an overflow emergency response plan that identifies measures to protect public health and the environment. At a minimum, this plan must include the following:

(a) Proper notification procedures so that the primary responders and regulatory agencies are informed of all SSOs in a timely manner;

(b) A program to ensure an appropriate response to all overflows;

(c) Procedures to ensure prompt notification to appropriate regulatory agencies and other potentially affected entities (e.g. health agencies, Regional Water Boards, water suppliers, etc.) of all SSOs that potentially affect public health or reach the waters of the State in accordance with the MRP. All SSOs shall be reported in accordance with this MRP, the California Water Code, other State Law, and other applicable Regional Water Board WDRs or NPDES permit requirements. The SSMP should identify the officials who will receive immediate notification;

(d) Procedures to ensure that appropriate staff and contractor personnel are aware of and follow the Emergency Response Plan and are appropriately trained;

(e) Procedures to address emergency operations, such as traffic and crowd control and other necessary response activities; and

(f) A program to ensure that all reasonable steps are taken to contain and prevent the discharge of untreated and partially treated wastewater to waters of the United States and to minimize or correct any adverse impact on the environment resulting from the SSOs, including such accelerated or additional monitoring as may be necessary to determine the nature and impact of the discharge.

(vii) **FOG Control Program:** Each Enrollee shall evaluate its service area to determine whether a FOG control program is needed. If an Enrollee determines that a FOG program is not needed, the Enrollee must provide justification for why it is not needed. If FOG is found to be a problem, the Enrollee must prepare and implement a FOG source control program to reduce the amount of these substances discharged to the sanitary sewer system. This plan shall include the following as appropriate:

(a) An implementation plan and schedule for a public education outreach program that promotes proper disposal of FOG;

(b) A plan and schedule for the disposal of FOG generated within the sanitary sewer system service area. This may include a list of acceptable disposal facilities and/or additional facilities needed to adequately dispose of FOG generated within a sanitary sewer system service area;

(c) The legal authority to prohibit discharges to the system and identify measures to prevent SSOs and blockages caused by FOG;

(d) Requirements to install grease removal devices (such as traps or interceptors), design standards for the removal devices, maintenance requirements, BMP requirements, record keeping and reporting requirements;

(e) Authority to inspect grease producing facilities, enforcement authorities, and whether the Enrollee has sufficient staff to inspect and enforce the FOG ordinance;

(f) An identification of sanitary sewer system sections subject to FOG blockages and establishment of a cleaning maintenance schedule for each section; and

(g) Development and implementation of source control measures for all sources of FOG discharged to the sanitary sewer system for each section identified in (f) above.

(viii) **System Evaluation and Capacity Assurance Plan**: The Enrollee shall prepare and implement a capital improvement plan (CIP) that will provide hydraulic capacity of key sanitary sewer system elements for dry weather peak flow conditions, as well as the appropriate design storm or wet weather event. At a minimum, the plan must include:

(a) **Evaluation**: Actions needed to evaluate those portions of the sanitary sewer system that are experiencing or contributing to an SSO discharge caused by hydraulic deficiency. The evaluation must provide estimates of peak flows (including flows from SSOs

that escape from the system) associated with conditions similar to those causing overflow events, estimates of the capacity of key system components, hydraulic deficiencies (including components of the system with limiting capacity) and the major sources that contribute to the peak flows associated with overflow events;

(b) **Design Criteria:** Where design criteria do not exist or are deficient, undertake the evaluation identified in (a) above to establish appropriate design criteria; and

(c) **Capacity Enhancement Measures:** The steps needed to establish a short- and long-term CIP to address identified hydraulic deficiencies, including prioritization, alternatives analysis, and schedules. The CIP may include increases in pipe size, I/I reduction programs, increases and redundancy in pumping capacity, and storage facilities. The CIP shall include an implementation schedule and shall identify sources of funding.

(d) **Schedule:** The Enrollee shall develop a schedule of completion dates for all portions of the capital improvement program developed in (a)-(c) above. This schedule shall be reviewed and updated consistent with the SSMP review and update requirements as described in Section D. 14.

(ix) **Monitoring, Measurement, and Program Modifications:** The Enrollee shall:

(a) Maintain relevant information that can be used to establish and prioritize appropriate SSMP activities;

(b) Monitor the implementation and, where appropriate, measure the effectiveness of each element of the SSMP;

(c) Assess the success of the preventative maintenance program;

(d) Update program elements, as appropriate, based on monitoring or performance evaluations; and

(e) Identify and illustrate SSO trends, including: frequency, location, and volume.

(x) **SSMP Program Audits** - As part of the SSMP, the Enrollee shall conduct periodic internal audits, appropriate to the size of the system and the number of SSOs. At a minimum, these audits must occur every two years and a report must be prepared and kept on file. This audit shall focus on evaluating the effectiveness of the SSMP and the

Enrollee's compliance with the SSMP requirements identified in this subsection (D.13), including identification of any deficiencies in the SSMP and steps to correct them.

(xi) **Communication Program** – The Enrollee shall communicate on a regular basis with the public on the development, implementation, and performance of its SSMP. The communication system shall provide the public the opportunity to provide input to the Enrollee as the program is developed and implemented.

The Enrollee shall also create a plan of communication with systems that are tributary and/or satellite to the Enrollee's sanitary sewer system.

14. Both the SSMP and the Enrollee's program to implement the SSMP must be certified by the Enrollee to be in compliance with the requirements set forth above and must be presented to the Enrollee's governing board for approval at a public meeting. The Enrollee shall certify that the SSMP, and subparts thereof, are in compliance with the general WDRs within the time frames identified in the time schedule provided in subsection D.15, below.

    In order to complete this certification, the Enrollee's authorized representative must complete the certification portion in the Online SSO Database Questionnaire by checking the appropriate milestone box, printing and signing the automated form, and sending the form to:

    State Water Resources Control Board
    Division of Water Quality
    Attn: SSO Program Manager
    P.O. Box 100
    Sacramento, CA 95812

    The SSMP must be updated every five (5) years, and must include any significant program changes. Re-certification by the governing board of the Enrollee is required in accordance with D.14 when significant updates to the SSMP are made. To complete the re-certification process, the Enrollee shall enter the data in the Online SSO Database and mail the form to the State Water Board, as described above.

15. The Enrollee shall comply with these requirements according to the following schedule. This time schedule does not supersede existing requirements or time schedules associated with other permits or regulatory requirements.

Sewer System Management Plan Time Schedule

Task and Associated Section	**Completion Date**			
	Population > 100,000	Population between 100,000 and 10,000	Population between 10,000 and 2,500	Population < 2,500
Application for Permit Coverage ***Section C***	6 months after WDRs Adoption			
Reporting Program ***Section G***	6 months after WDRs Adoption[1]			
SSMP Development Plan and Schedule ***No specific Section***	9 months after WDRs Adoption[2]	12 months after WDRs Adoption[2]	15 months after WDRs Adoption[2]	18 months after WDRs Adoption[2]
Goals and Organization Structure ***Section D 13 (i) & (ii)***	12 months after WDRs Adoption[2]		18 months after WDRs Adoption[2]	
Overflow Emergency Response Program ***Section D 13 (vi)***	24 months after WDRs Adoption[2]	30 months after WDRs Adoption[2]	36 months after WDRs Adoption[2]	39 months after WDRs Adoption[2]
Legal Authority ***Section D 13 (iii)***				
Operation and Maintenance Program ***Section D 13 (iv)***				
Grease Control Program ***Section D 13 (vii)***				
Design and Performance ***Section D 13 (v)***	36 months after WDRs Adoption	39 months after WDRs Adoption	48 months after WDRs Adoption	51 months after WDRs Adoption
System Evaluation and Capacity Assurance Plan ***Section D 13 (viii)***				
Final SSMP, incorporating all of the SSMP requirements ***Section D 13***				

1. In the event that by July 1, 2006 the Executive Director is able to execute a memorandum of agreement (MOA) with the California Water Environment Association (CWEA) or discharger representatives outlining a strategy and time schedule for CWEA or another entity to provide statewide training on the adopted monitoring program, SSO database electronic reporting, and SSMP development, consistent with this Order, then the schedule of Reporting Program Section G shall be replaced with the following schedule:

Reporting Program ***Section G***	
Regional Boards 4, 8, and 9	8 months after WDRs Adoption
Regional Boards 1, 2, and 3	12 months after WDRs Adoption
Regional Boards 5, 6, and 7	16 months after WDRs Adoption

If this MOU is not executed by July 1, 2006, the reporting program time schedule will remain six (6) months for all regions and agency size categories.

2. In the event that the Executive Director executes the MOA identified in note 1 by July 1, 2006, then the deadline for this task shall be extended by six (6) months. The time schedule identified in the MOA must be consistent with the extended time schedule provided by this note. If the MOA is not executed by July 1, 2006, the six (6) month time extension will not be granted.

E. WDRs and SSMP AVAILABILITY

1. A copy of the general WDRs and the certified SSMP shall be maintained at appropriate locations (such as the Enrollee's offices, facilities, and/or Internet homepage) and shall be available to sanitary sewer system operating and maintenance personnel at all times.

F. ENTRY AND INSPECTION

1. The Enrollee shall allow the State or Regional Water Boards or their authorized representative, upon presentation of credentials and other documents as may be required by law, to:

    a. Enter upon the Enrollee's premises where a regulated facility or activity is located or conducted, or where records are kept under the conditions of this Order;

    b. Have access to and copy, at reasonable times, any records that must be kept under the conditions of this Order;

c. Inspect at reasonable times any facilities, equipment (including monitoring and control equipment), practices, or operations regulated or required under this Order; and

d. Sample or monitor at reasonable times, for the purposes of assuring compliance with this Order or as otherwise authorized by the California Water Code, any substances or parameters at any location.

G. GENERAL MONITORING AND REPORTING REQUIREMENTS

1. The Enrollee shall furnish to the State or Regional Water Board, within a reasonable time, any information that the State or Regional Water Board may request to determine whether cause exists for modifying, revoking and reissuing, or terminating this Order. The Enrollee shall also furnish to the Executive Director of the State Water Board or Executive Officer of the applicable Regional Water Board, upon request, copies of records required to be kept by this Order.

2. The Enrollee shall comply with the attached Monitoring and Reporting Program No. 2006-0003 and future revisions thereto, as specified by the Executive Director. Monitoring results shall be reported at the intervals specified in Monitoring and Reporting Program No. 2006-0003. Unless superseded by a specific enforcement Order for a specific Enrollee, these reporting requirements are intended to replace other mandatory routine written reports associated with SSOs.

3. All Enrollees must obtain SSO Database accounts and receive a “Username” and “Password” by registering through the California Integrated Water Quality System (CIWQS). These accounts will allow controlled and secure entry into the SSO Database. Additionally, within 30days of receiving an account and prior to recording spills into the SSO Database, all Enrollees must complete the “Collection System Questionnaire”, which collects pertinent information regarding a Enrollee’s collection system. The “Collection System Questionnaire” must be updated at least every 12 months.

4. Pursuant to Health and Safety Code section 5411.5, any person who, without regard to intent or negligence, causes or permits any untreated wastewater or other waste to be discharged in or on any waters of the State, or discharged in or deposited where it is, or probably will be, discharged in or on any surface waters of the State, as soon as that person has knowledge of the discharge, shall immediately notify the local health officer of the discharge. Discharges of untreated or partially treated wastewater to storm drains and drainage channels, whether man-made or natural or concrete-lined, shall be reported as required above.

   Any SSO greater than 1,000 gallons discharged in or on any waters of the State, or discharged in or deposited where it is, or probably will be, discharged in or on any surface waters of the State shall also be reported to the Office of Emergency Services pursuant to California Water Code section 13271.

H. CHANGE IN OWNERSHIP

1. This Order is not transferable to any person or party, except after notice to the Executive Director. The Enrollee shall submit this notice in writing at least 30 days in advance of any proposed transfer. The notice must include a written agreement between the existing and new Enrollee containing a specific date for the transfer of this Order's responsibility and coverage between the existing Enrollee and the new Enrollee. This agreement shall include an acknowledgement that the existing Enrollee is liable for violations up to the transfer date and that the new Enrollee is liable from the transfer date forward.

I. INCOMPLETE REPORTS

1. If an Enrollee becomes aware that it failed to submit any relevant facts in any report required under this Order, the Enrollee shall promptly submit such facts or information by formally amending the report in the Online SSO Database.

J. REPORT DECLARATION

1. All applications, reports, or information shall be signed and certified as follows:

    (i) All reports required by this Order and other information required by the State or Regional Water Board shall be signed and certified by a person designated, for a municipality, state, federal or other public agency, as either a principal executive officer or ranking elected official, or by a duly authorized representative of that person, as described in paragraph (ii) of this provision. (For purposes of electronic reporting, an electronic signature and accompanying certification, which is in compliance with the Online SSO database procedures, meet this certification requirement.)

    (ii) An individual is a duly authorized representative only if:

        (a) The authorization is made in writing by a person described in paragraph (i) of this provision; and

        (b) The authorization specifies either an individual or a position having responsibility for the overall operation of the regulated facility or activity.

K. CIVIL MONETARY REMEDIES FOR DISCHARGE VIOLATIONS

1. The California Water Code provides various enforcement options, including civil monetary remedies, for violations of this Order.

2. The California Water Code also provides that any person failing or refusing to furnish technical or monitoring program reports, as required under this Order, or

falsifying any information provided in the technical or monitoring reports is subject to civil monetary penalties.

L. SEVERABILITY

1. The provisions of this Order are severable, and if any provision of this Order, or the application of any provision of this Order to any circumstance, is held invalid, the application of such provision to other circumstances, and the remainder of this Order, shall not be affected thereby.

2. This order does not convey any property rights of any sort or any exclusive privileges. The requirements prescribed herein do not authorize the commission of any act causing injury to persons or property, nor protect the Enrollee from liability under federal, state or local laws, nor create a vested right for the Enrollee to continue the waste discharge.

CERTIFICATION

The undersigned Clerk to the State Water Board does hereby certify that the foregoing is a full, true, and correct copy of general WDRs duly and regularly adopted at a meeting of the State Water Resources Control Board held on May 2, 2006.

AYE: Tam M. Doduc
Gerald D. Secundy

NO: Arthur G. Baggett

ABSENT: None

ABSTAIN: None

Song Her
Clerk to the Board

Sewer System
Management Plan (SSMP)

S S M P Goals

The Goals of the Union Sanitary District for the Maintenance and Management of our Collection System are to:

- **Provide a safe work environment for our employees**
- **Minimize preventable SSO's**
- **Understand the condition of and maintain our infrastructure to maximize the life of the collection system**
- **Operate & maintain our system to minimize impacts on our customers**
- **Prepare for emergencies**
- **Be a part of the community & be a responsive public agency**
- **Involve our employees in the strategic planning process for Collection System**
- **Effectively plan system expansion to meet the capacity needs of the three cities we serve**
- **Set high, achievable standards for the construction of new infrastructure.**

To achieve these goals, we will continue to implementation of the following programs:

- **Using the "Balance Scorecard" model to focus on SSO Reduction**
- **84-Month Cleaning & TV inspection of all pipe except plastic pipe in one of the seven maintenance sections. TV inspection of only plastic pipe (in whole residential/commercial developments where plastic pipe is installed) will occur every other cycle in one of the seven maintenance sections.**
- **Selective Line Cleaning Program**
- **Fats, Oil & Grease (FOG) Control Program**
- **Root Control Program**

S S M P Goals
(continued)

- **Easement Maintenance Program**
- **Vector Control Program**
- **Corrosion & Odor Control Program**
- **Pump Station & Lift Station Inspection & Maintenance Program**
- **Force Main Maintenance Program**
- **Periodic updates to the Basin Master Plans & Equalization Storage Plan**
- **Capital Improvement Program**
- **Inspecting & Testing of pipes and manholes prior to acceptance**
- **Vehicle & Equipment Renewal & Replacement Program**
- **Emergency Response Program**
- **Technical & Safety Training Program**

FY20 PLAN

Cleaning Actual Footages/Costs — **Aug-19 Clean Cost/Ft = $0.96**

Description	Jul-19 Footage	Aug-19 Footage	FY20 Q1 Footage	FY20 YTD Footage	FY20 YE Goal	FY19 YTD Footage	% Cmpl to Plan
84 Month Hydro-jet Clean	72,508	68,197	140,705	140,705	605,190	388,628	23.2%
Selective Line Cleaning	8,315	3,440	11,755	11,755	114,574	177,381	10.3%
Special Condition Clean	0	747	747	747	31,599	31,514	2.4%
Root Control/Chemical Cln	18,573	10,237	28,810	28,810	298,028	294,349	9.7%
Cast Iron Proj/Other (not included in Cost Per Foot)	0	0	0	0	0	0	
Totals	99,396	82,621	182,017	182,017	1,049,391	891,872	17.3%

FY20 PLAN

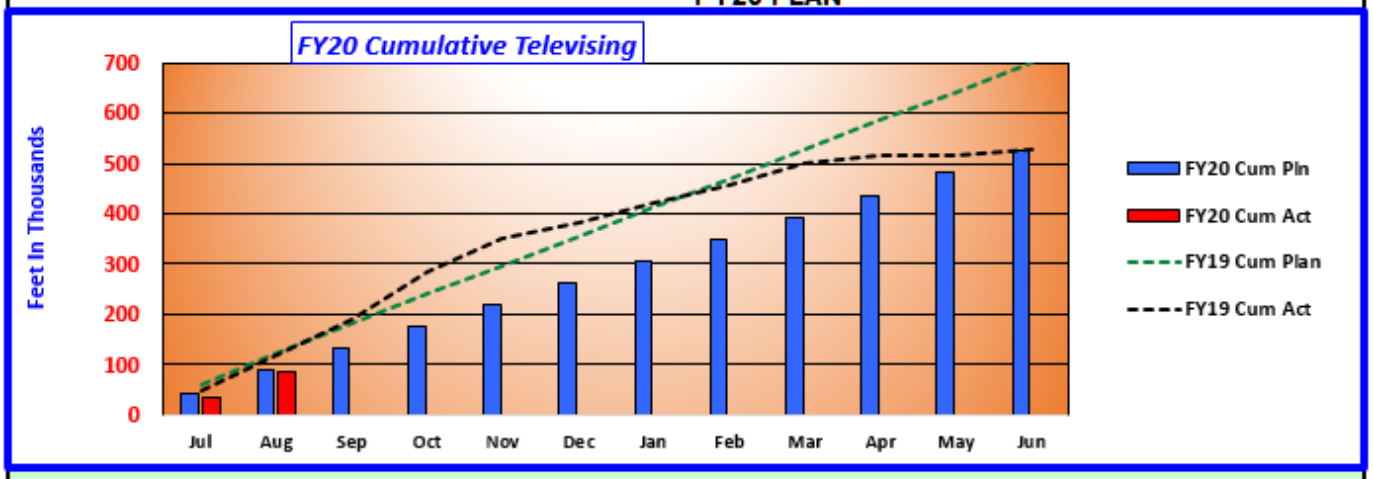

Televising Actual Footages/Costs — **Aug-19 TV Cost/Ft = $1.13**

Description	Jul-19 Footage	Aug-19 Footage	FY20 Q1 Footage	FY20 YTD Footage	FY20 YE Goal	FY19 YTD Footage	% Cmpl to Plan
84 Month TV Inspection	32,117	46,846	78,963	78,963	416,533	432,269	19.0%
Visual/Condition,Pre/Post Cnst TV	917	490	1,407	1,407	23,481	28,651	6.0%
New Development, CIP, Misc.	0	3,848	3,848	3,848	44,852	46,736	8.6%
QA/QC Line Condition	0	0	0	0	17,186	7,044	0.0%
QA/QC Root Control	0	0	0	0	22,352	14,260	0.0%
Totals	33,034	51,184	84,218	84,218	524,404	528,960	16.1%

FY20 ANNUAL PM PLAN

7-17-19

FY20 84 Mo PM Plan Goals:

~ PM 84 Mos

Cleaning Projections:			Televising Projections:		
PM Annual Goal Area B	605,190		PM Annual Goal Area B	416,533	
TRUNK LINES			TRUNK LINES		
All PM Annual Cleaning	605,190		All PM Annual Cleaning	416,533	
Selective Lines	114,574	Crystl Pln	Visual/Cond/Cnst Avg - FY17 Yr Avg	23,481	2 Yr Avg
Saw & R/C	298,028	Crystl Pln	Accept/CIP TV Avg - FY17 Avg	44,852	2 Yr Avg
Special Cond Avg - 2 Yr Avg	31,599	2 Yr Avg	QA/QC Line Condition	17,186	15% of SEL
			QA/QC Root Control	22,352	15% of R/C
Cast Iron Proj.					
Total FY20 Annual Cleaning Plan	1,049,391	3.6	Total FY20 Annual Televising Plan	524,404	2.5
12 Mos Annualized =>	87,449		12 Mo Annualized =>	43,700	
FY19 Plan	1,038,531		FY19 Plan	700,312	

Objectives	FY19 Collection Services BSC Measures	2nd Qtr		3rd Qtr		4th Qtr		FY 19 To Date		FY 19 Target
Customer Perspective:										
▪ Minimize Overflows SSO's	· # of Category 3 SSOs (See Comment Note==>)	1	SSOs	0	SSOs	0	SSOs	1	SSOs	≤ 10 Category 3 SSOs
	· # of Category 2 SSOs	0	SSOs	1	SSOs	0	SSOs	1	SSOs	▪ Zero Category 2 SSOs
	· # of Category 1 SSOs	0	SSOs	0	SSOs	0	SSOs	0	SSOs	▪ Zero Category 1 SSOs
▪ Minimize Negative Impact on Environment	· Percent of spill recovery	100.0%	Recovery	100.0%	Recovery	0.0%	Recovery	100.0%	Recovery	▪ 50% Recovery
	· SSO's # of Repeats	0	Repeats	0	Repeats	0	SSO Repeats	0	SSO Repeats	▪ Zero Repeats
Manage and maintain assets and infrastructure	▪ Critical Asset Failures Sewer Main or MH Deficiency resulting in Category 1 SSO, sink hole, injury or resulting property damage > $2,000 due to one or more of the following: – Break, collapse, offset or hole in pipe or – PMP not followed – Corrosion – Defect identified & corrective action not	0	Asset failure	0	Failures	0	Failures	0	Asset failure	▪ Asset failure
	▪ Stoppage in > 12" diameter mainline	0	Stoppages	0	Stoppages	0	Stoppages	0	Stoppages	▪ Zero Stoppages
	▪ # of times building becomes dangerous or unsuitable for occupation.	0	Incidents	0	Incidents	0	Incidents	0	Incidents	▪ Zero Incidents
	Critical asset failure with a negative impact on customers or the environment	0	Incidents	0	Incidents	0	Incidents	0	Incidents	Zero Incidents
▪ Provide Prompt Service	Response Time from notification thru initial contact includes dispatch time	96.4%	w/i 1 hour	95.8%	w/i 1 hour	97.9%	w/i 1 hour	96.9%	w/i 1 hour	≥ 95% w/i 1 hr
▪ Reduce negative impacts of District	Number of odor complaints attributable to sewer	0	Odors	0	Odor	0	Odors	0	Odor	≤ 2 Odor
Financial Perspective:										
▪ Provide competitive service Cost per feet/day	Cleaning – cost per ft/day/crew	$0.96	Per ft	$1.22	Per ft	$1.98	Per ft	$1.15	Clean Per Ft	Clean - $0.79 to $1.42
	Televising – cost per ft/day/crew	$1.23	Per ft	$1.50	Per ft	$1.71	Per ft	$1.32	TV Per Ft	TV - $1.02 to $1.78
▪ Minimize Claims & Fines	Total Cost of Claims/Fines (from SSO's &	$0	Total Claims	$0	Total Claims	$0	Total Claims	$0	Total Claims	Claims ≤$2000
		$0	Total Fines	$0	Total Fines	$0	Total Fines	$0	Total Fines	Fines-$0
	Average cost per claim/fine	$0	Avg Claims	$0	Avg Claims	$0	Avg Claims	$0	Avg Claims	Avg Claims ≤$1000
		$0	Avg Fines	$0	Avg Fines	$0	Avg Fines	$0	Avg Fines	Avg Fines-$0
Internal Process Perspective:										
▪ Pipe/Problem Assessment	Number of Repeat Spills	0	Zero	0	Zero	0	Zero	0	per year	≤ 2 per year
▪ Preventative Maint. Program	Cleaning Goal Footage % Complete	31.2%	% Complete	15.4%	% Complete	14.6%	% Complete	85.9%	YTD % Complete	Annual Goal = 100%
	Televising Goal Footage % Complete	27.3%	% Complete	17.2%	% Complete	4.0%	% Complete	75.5%	YTD % Complete	Annual Goal = 100%
▪ Cleaning (other cleaning omitted)	Per Month Cleaning Footages	108,066	Avg Ft Per Mo	53,359	Avg Per Mo	50,450	Avg Per Mo	74,323	Avg Mo	86,544 Mo; 1,038,531
o Feet per crew day	o Feet Per Crew/Day	2,541	Ft Per Crew/Da	2,884	Ft Per Crew/Day	1,478	Ft Per Crew/Day	2,361	AvgFt Per Cre	2,500 to 4,500 Per Crew Day
o # of Crew Days	o # of Crew Days	19.3	# of Crew Day	12.3	# of Crew Days	21.3	# of Crew Days	18.5	Avg # of Crew	19 to 35 Crew Days
▪ Televising	Per Month Televising Footages	63,695	Avg Ft Per Mo	40,218	Avg Per Mo	9,279	Avg Per Mo	44,110	Avg Mo	58,359 Mo; 700,312
o Feet per crew day	o Feet Per Crew/Day	2,118	Ft Per Crew/Da	1,547	Ft Per Crew/Day	2,093	Ft Per Crew/Day	1,910	Avg Ft Per Cr	2,000 to 3,500 Per Crew Day
o # of Crew Days	o # of Crew Days	16.3	# of Crew Day	17.3	# of Crew Days	6.3	# of Crew Days	15.7	Avg # of Crew	17 to 29 Crew Days
▪ Key Vehicles not Available For Preventative Maintenance	Days Per Mo 2 Hydrojets Not Available	0	Days	0	Days	0	Days	0	Days	< 3 Days
	Days Per Mo 2 TV Vans Not Available	0	Days	0	Days	0	Days	0	Days	< 3 Days
Learning & Growth:										
▪ Maintain and increase employee skills	# Training modules updated & taught	0	Module	2	Modules	3	Modules	10	Modules	9
	# of Training Modules w/instructions com							0	Mentoring	2
	# of individual Competency Assessments	0	Assessments	19	Assessments	0	Assessments	24	Assessments	43
▪ Communicate Performance Data to Teams	# of time info shared with Team	3	Min. per mo	3	Min. per mo	3	Min. per mo	12	Min. per mo	12 Total, Min. 1 per/mo

Sewer System
Management Plan (SSMP)

O r g a n i z a t i o n

- **<u>LRO – Legally Responsible Official, General Manager, Paul Eldredge, (510) 477-7502</u>**
- **<u>Collection Services Manager, James Schofield, (510) 477-7553, Office, or (510) 206-4018, Cell</u> – The person responsible for implementing, managing and updating the SSMP.**

- **Chain of Communication for responding to SSO's:**
  - **Initial call is received and dispatched by:**
    - **Customer Service Team during normal business hours – (510) 477-7500**
    - **Total Productive Operations Team after normal business hours – (510) 477-7500**
  - **Dispatched call is received by:**
    - **Construction or Maintenance/TV Team 24/7/265**
    - **Or Fabrication, Maintenance & Construction Team 24/7/365 if it is related to Pump Stations, Lift Stations or Force Mains**

- **Chain of Communication for reporting SSO's:**
  - **Either a Coach or Manager from Collection Services will report SSO's from the gravity system – James Schofield, (510) 477-7553, Office, or (510) 206-4018, Cell**
  - **Or the FMC Manager will report SSO's from Pump Stations, Lift Stations or Force Mains – Robert Simonich, (510) 477-7518, Office, or (510) 701-4337, Cell**

- **Other Points of Contact:**
    - **New Sewer Installations – Rollie Arbolante, (510) 477-7602, Office, or (510) 828-0000, Cell**
    - **Engineering Plan/Designs – Raymond Chau, (510) 477-7606, Office, or (510) 896-5072, Cell**
    - **Environmental Compliance – Michael Dunning, (510) 477-7369, Office, or (510) 579-3404, Cell**

UNION SANITARY DISTRICT

Board of Directors

Manny Fernandez Tom Handley Pat Kite Anjali Lathi Jennifer Toy

General Manager / District Engineer
Paul Eldridge
(144)

ETSU Steering Committee

Technical Services Manager
Sami Ghossain
(35)

- Coach
  - Capital Improvements Projects Team (8)
    - Administrative Specialist I(1)
    - Assistant Engineer (2)
    - Associate Engineer (2)
    - Engineering Technician III (1)
    - Senior Engineer (1)
    - Assistant/Associate Engineer – Limited Duration (1)
- Coach
  - Customer Service Team (12)
    - As-needed Receptionist (1)
    - Engineer Technician I (1)
    - Exec. Assistant to the GM/Board Clerk(1)
    - Associate Engineer (1)
    - C&IG Coordinator (1)
    - Construction Inspector II (2)
    - Customer Service Fee Analyst (2)
    - Engineer Technician II (1)
    - Receptionist (1)
    - Limited-term Construction Inspector I (1)
- Coach
  - Environmental Compliance Team (11)
    - Adm. Specialist I (2)
    - EC Inspector II (3)
    - EC Inspector III (3)
    - EC Inspector IV (1)
    - EC Outreach Rep (1)
    - Environmental Program Coordinator (1)

Collection Services Manager
James Schofield
(31)

- Coach
  - Maint./ TV Team (12)
    - Collection Services Trainer (1)
    - Collection System Worker I (4)
    - Collection System Worker II (4)
    - Lead Collection System Worker(3)
- Coach
  - Support Team (8)
    - Adm. Specialist II (1)
    - Fleet Mechanic II (2)
    - Janitor (2)
    - Maintenance Assistant (1)
    - Mechanic II (1)
    - Planner/ Scheduler (1)
  - Construction Team (9)
    - Collection System Worker II (8)
    - Lead Collection System Worker (1)

Treatment & Disposal Services Manager
Armando Lopez
(26)

- Coach
  - Research & Support Team (6)
    - Adm. Specialist I (1)
    - Chemist II (3)
    - Lab Director(1)
    - Sr. Process Engineer (1)
- Coach (Day)
  - Total Productive Operations (9)
    - Plant Operator III (8)
    - Plant Operations Trainer (1)
- Coach – LD (Night)
  - Total Productive Operations (7)
    - Plant Operator III (6)
    - Plant Operator III Trainee (1)

Fabrication, Maintenance, & Construction Manager
Robert Simonich
(28)

- Coach
  - Electrical/ Support Team (8)
    - Adm. Specialist I (1)
    - Instrument Technician/ Electrician (4)
    - Painter (2)
    - Planner/ Scheduler II (1)
  - Information Technology Team (5)
    - Sr. GIS DBA(1)
    - IT Administrator (1)
    - Sr. Network Administrator (1)
    - Sr. Developer/ DBA (1)
    - Sr. IT Analyst (1)
- Coach
  - Mechanical Team (12)
    - Mechanic I (2)
    - Mechanic II (10)

Business Services Manager/CFO
Vacant
(19)

- Coach/ HR Mgr
  - Organizational Support Team (6)
    - Adm. Specialist II (1)
    - Environmental Health & Safety Program Manager (2)
    - Human Resources Analyst II (1)
    - Org Performance Manager(1)
    - Org Performance Coordinator II(1)
- Coach
  - Finance & Acquisition Services Team (10)
    - Acct. & Financial Analyst II (2)
    - Acct. Technical Specialist (2)
    - Acct. Technician I (1)
    - Adm. Specialist I (1)
    - Buyer I (1)
    - Purchasing Agent (1)
    - Storekeeper I (1)
    - Storekeeper II (1)

Enhanced Treatment Site Upgrade Program Mgr., Rick Pipkin
(4)

- Assistant Program Mgr
  - Enhanced Treatment Site Upgrade (2)
    - Adm. Specialist (1)
    - Assistant Engineer (1)

Vacancy

November 1, 2019

Sewer System Management Plan (SSMP)

Legal Authority

Union Sanitary District has the following documents which provide the legal authority to meet this part of the SSMP requirements.

- **August 2019 Ordinance 36.04 – Pretreatment Ordinance and Technically Based Local Limits – Addresses illicit discharges, prohibited discharges, and enforcement**
- **July 2019 Ordinance 34.08 – Provides for Plan Review, Issuance of Construction Permits, Inspection of Sewerage Installation, and the Collection of Fees for these services – Address access, laterals, and enforcement**
- **2017 Standard Specifications and Information Bulletin – Establishes design and construction standards**
- **May 2004 Ordinance 38 – Fats, Oils and Grease Control Ordinance**

UNION
SANITARY
DISTRICT

UNION SANITARY DISTRICT
SEWER USE ORDINANCE

ORDINANCE NO. 36.04

TABLE OF CONTENTS

SECTION 1
GENERAL PROVISIONS
1.01 Purpose & Policy 1
1.02 Definitions 2-11
1.03 Analytical & Sampling Methodology & Procedures 11

SECTION 2
REGULATIONS
2.01 Sewer Use Requirements 11
2.01.1 Prohibited Discharges 11-13
2.01.2 No person shall discharge the following wastes to the community sewer 13
2.02 Requirements for Dental Facilities that Remove or Place Amalgam Fillings 14-15
2.03 Prohibitions on Storm Drainage and Groundwater 15-16
2.04 Acceptance of Groundwater from Cleanup Projects 16
2.05 Prohibition on Unpolluted Water 16
2.06 Limitations on Radioactive Wastes 16-17
2.07 Limitations on the Use of Garbage Grinders 17
2.08 Limitations on Points of Discharge 17
2.09 Holding Tank Waste 17-18
2.10 Limitations on Wastewater Strength 18-20
2.11 Prohibition on Slug Discharges 20
2.12 Prohibition on Use of Dilution 20
2.13 Prohibition of Bypass 21
2.14 Prohibition of the Discharge of Process Solution Tanks 21-22
2.15 Prohibition of the Discharge of Petroleum or Mineral Oil Causing Pass-through or Interference 22
2.16 Prohibition of the Discharge of Trucked or Hauled Wastes 22
2.17 Prohibition of the Discharge from Containment Areas 22
2.18 Prohibition of Unapproved Sanitary Sewer Connections 22

SECTION 3
WASTEWATER VOLUME DETERMINATION
3.01 Application 22
3.02 Metered Water Supply 22-23

SECTION 4
ADMINISTRATION
4.01 Application 23
4.02 Discharge Reports 24

TABLE OF CONTENTS

4.03 Wastewater Discharge Reports 23-24
4.04 Permit Application 25-26
4.05 Permit Conditions 26-28
4.06 Duration of Permits 28
4.07 Modification of Permit 27
4.08 Wastewater Discharge Permit Transfer 29
4.09 Revocation of Permit 29-30
4.10 Monitoring Facilities 30-31
4.11 Inspection and Sampling 31
4.12 Search Warranties 31
4.13 Pretreatment 32
4.14 Protection from Accidental Discharge 32
4.15 Confidential Information 32
4.16 Signature Requirement 33-34
4.17 Retention of Records 34
4.18 Notice to Employees 34
4.19 Preventive Measures 34-35
4.20 Notification of Changed Conditions 35
4.21 Notification of Hazardous Waste Discharge 35
4.22 Special Agreements 36
4.23 Immediate Notification of Slug Loadings to the POTW 36
4.24 Industrial User Self-Monitoring Requirements 36-37
4.25 Special Agreements 37-40

SECTION 5
WASTEWATER CHARGES & FEES
5.01 Schedule of Charges & Fees 40
5.02 Environmental Compliance Charges & Fees 40

SECTION 6
ENFORCEMENT
6.01 Notification of Discharge 41
6.02 Notification of Violation 41
6.03 Consent Orders 41
6.04 Show Cause Hearing 42
6.05 Administrative Orders 42
6.06 Issuance of Cease & Desist Orders 42
6.07 Legal Authority to Administrative Fines 43
6.08 Administrative Procedures & Penalties 43-46
6.09 Submission of Compliance Time Schedule 46
6.10 Compliance Schedule Progress Reports 46-47
6.11 Appeals 47

TABLE OF CONTENTS

6.12 Reports of Potential Problems 47-48
6.13 Notice of Violation/Repeat Sampling & Reporting 48
6.14 Reports from Unpermitted Users 48
6.15 Public Notification of Dischargers Found to be in Significant Non-Compliance 48

SECTION 7
ABATEMENT
7.01 Public Nuisance 48-49
7.02 Recovery of Expenses 49
7.03 Injunctive Relief 49
7.04 Damage to Facilities 49
7.05 Civil Penalties 49
7.06 Court Imposed Civil & Criminal Penalties 50
7.07 Falsifying Information 50
7.08 Termination of Service 51
7.09 Emergency Suspension of Service 51
7.10 Immediate termination of Discharge 52
7.11 Nonexclusive Remedies 52

SECTION 8
SEVERABILITY
Section 8 –Severability 53

SECTION 9
Section 9 53

SECTION 10
PUBLICATION AND MINUTE ENTRY 53

SUPPLEMENT 54
40 CFR Part 2.302(2): Definition of Effluent Data 54-55
40 CFR Part 136: Environmental Protection Agency Regulations on Test Procedures for the Analysis of Pollutants 55
40 CFR Part 261: Environmental Protection Agency Regulations for Identifying Hazardous Waste 55
40 CFR Part 403.5: National Pretreatment Standards: Prohibited Discharges 55-57
40 CFR Part 403.8(f)(2)(vi): Slug Control Plans 58
40 CFR Part 403.12 Reporting Requirements for POTWs & Industrial Users .. 58

TABLE OF CONTENTS

40 CFR Part 403.12(h): Reporting Requirements for Industrial Users Not Subject to Categorical Standards 58
40 CFR Part 403.12 (p): Hazardous Waste Discharge Notification..... 59
40 CFR Part 405 – 471: Categorical Standards & Requirements.....60
Locally regulated Toxic Organic Pollutants.....61

Section 1

GENERAL PROVISIONS

1.01 Purpose and Policy

This ordinance sets forth uniform requirements for users of the Publicly Owned Treatment Works of the Union Sanitary District and enables the Agency to comply with all applicable Local, State and Federal laws, including the Clean Water Act (33 United States Code § 1251 *et seq.),* the General Pretreatment Regulations (40 Code of Federal Regulations Part 403) and the water quality requirements set by the Regional Water Quality Control Board and/or the State of California Water Resource Control Board. The objectives of this ordinance are:

(a) To prevent the introduction of pollutants into the Publicly Owned Treatment Works that will interfere with its operation;

(b) To prevent the introduction of pollutants into the Publicly Owned Treatment Works that will pass through the Publicly Owned Treatment Works, inadequately treated, into receiving waters, or otherwise be incompatible with the Publicly Owned Treatment Works;

(c) To protect both Publicly Owned Treatment Works personnel who may be affected by wastewater and sludge in the course of their employment and the general public;

(d) To promote reuse and recycling of industrial wastewater and sludge from the Publicly Owned Treatment Works;

(e) To provide revenues derived from the application of this Ordinance which shall be used to defray the Agency's cost of operating and maintaining adequate wastewater collection and treatment systems and to provide sufficient funds for capital outlay, bond service costs, capital improvements, and depreciation for the equitable distribution of the cost of operation, maintenance, and improvement of the Publicly Owned Treatment Works; and

(f) To enable Agency to comply with its National Pollutant Discharge Elimination System permit conditions, sludge use and disposal requirements, and any other Federal, State or Local laws to which the Publicly Owned Treatment Works is subject.

This ordinance shall apply to all users of the Publicly Owned Treatment Works. The ordinance authorizes the issuance of wastewater discharge permits; provides for monitoring, compliance, and enforcement activities; establishes administrative review procedures; requires user reporting; and provides for the setting of fees for the equitable distribution of costs resulting from the program established herein.

1.02 Definitions

Unless otherwise defined herein, terms shall be as found in Title 40 Code of Federal Regulations (CFR) Parts 403 and 136.

(a) *Agency:* Union Sanitary District.

(b) *Amalgam:* an alloy containing mercury, tin, silver, or copper that is used in dentistry to restore teeth.

(c) *Amalgam Separator:* a device that applies filtration, settlement, centrifugation, or ion exchange to remove amalgam and its metal constituents from a dental office vacuum system before it discharges to the sewer.

(d) *Amalgam Waste:* includes non-contact amalgam (amalgam scrap that has not been in contact with the patient); contact amalgam (including, but not limited to, extracted teeth containing amalgam); amalgam sludge captured by chair-side traps, vacuum pump filters, screens and other amalgam trapping devices; used amalgam capsules; and leaking or unusable amalgam capsules.

(e) *Authority:* The East Bay Dischargers Authority.

(f) *Batch Discharge:* A definite quantity or volume of wastewater produced under conditions that are considered uniform.

(g) *Beneficial Uses:* Uses of the waters of the state that may be protected against quality degradation include, but are not necessarily limited to, domestic, municipal, agricultural and industrial supply, power generation, recreation, aesthetic enjoyment, navigation and the preservation and enhancement of fish, wildlife and other aquatic resources or reserves, and other uses, both tangible or intangible, as specified by federal or state law.

(h) *Best Management Practices or BMPs:* Schedules of activities, prohibitions of practices, maintenance procedures, and other management practices to implement the prohibitions listed in 40 CFR 403.5(a)(1) and (b). BMPs also include treatment requirements, operating procedures, and practices to control plant site runoff, spillage and leaks, sludge or waste disposal, or drainage from raw materials.

(i) *Building Sewer:* A sewer conveying wastewater from a point 30 inches or less from the building or structure to a main sewer. The building sewer includes that portion on the property and that portion from the property line or easement line to the sewer main (Lateral Sewer).

(j) *Bypass:* The intentional diversion of waste streams from any portion of an Industrial User's treatment facility.

(k) *Categorical Pretreatment Standard or Categorical Standard:* Standards specifying the quantity, concentration, or properties of pollutants that may be discharged to POTWs. EPA promulgates pretreatment standards for specific industry categories in accordance with Clean Water Act section 307. These standards are codified in 40 CFR chapter I, subchapter N, Parts 405–471.

(l) *Chemical Oxygen Demand or COD:* The measure of the oxygen equivalent of the organic matter content of a sample that is susceptible to oxidation by a strong chemical oxidant.

(m) *Community Sewer:* A sewer owned and operated by the Agency, a city, or other public agency tributary to a treatment facility operated by the Agency or the Authority.

(n) *Compatible Pollutant:* Biochemical oxygen demand, chemical oxygen demand, suspended solids, pH and fecal coliform bacteria, plus additional pollutants identified in the Agency's National Pollutant Discharge Elimination System (NPDES) permit if the publicly owned treatment works was designed to treat such pollutants, and in fact does remove such pollutants to a substantial degree.

(o) *Composite Sample:* A sample resulting from the combination of individual wastewater samples taken at selected intervals based on an increment of either flow or time. Samples may be taken manually or by using automatic equipment. Manual composite samples shall consist of a minimum of four (4) grab samples.

(p) *Contamination:* An impairment of the quality of the waters of the state by waste to a degree which creates a hazard to the public health through poisoning or through the spread of disease. Contamination shall include any equivalent effect resulting from the disposal of wastewater, whether or not waters of the state are affected.

(q) *District*: Union Sanitary District

(r) *Domestic Use:* Any single family or multifamily residence which discharges, or causes, or allows the discharge of domestic wastewater to the POTW.

(s) *Domestic Wastewater:* The liquid waste or liquid-borne waste discharged from residential units, normally resulting from the non-commercial preparation, cooking and handling of food, personal laundry, and wastes from sanitary conveniences or from sanitary devices in industrial or commercial establishments.

(t) *Environmental Protection Agency or EPA:* The U.S. Environmental Protection Agency or, where appropriate, the Regional Water Management Division Director, or other duly authorized official of said agency.

(u) *Federal Act, Clean Water Act:* The Federal Water Pollution Control Act, also known as the Clean Water Act, as amended, PL 92-500 Title 33 U.S. Code, section 1251 et seq. (and any amendments thereto; as well as any guidelines, limitations, and standards promulgated by the Environmental Protection Agency pursuant to the Act.)

(v) *Grab Sample:* A sample that is taken from a wastestream without regard to the flow in the wastestream and over a period of time not to exceed fifteen (15) minutes.

(w) *Hazardous Waste*: Waste substances which can pose a hazard to human health or the environment when improperly managed; or. waste that possesses at least one of these four characteristics: ignitability, corrosivity, reactivity or toxicity; or appears on special U.S. EPA lists. This definition also includes all wastes covered in the California Code of Regulations, Title 22, Division 4.5 Environmental Health Standards for the Management of Hazardous Waste.

(x) *Holding Tank Waste:* Any waste from temporary or permanent containers such as holding tanks, vessels, truck tanks, chemical toilets, campers, trailers, septic tanks, totes, drums, vacuum pump tank trucks, etc.

(y) *Incompatible Pollutant:* Any pollutant, which is not a compatible pollutant as defined in this section.

(z) *Industrial User*: An industrial or commercial business, which discharges, or causes, or allows the discharge of non-domestic wastewater to the POTW.

(aa) *Industrial Wastewater:* Liquid waste or liquid-borne waste that is generated in a commercial or industrial process.

(bb) *Indirect Discharge or Discharge:* The introduction of pollutants into the POTW from any non-domestic source regulated under Section 307(b), (c), or (d) of the Clean Water Act.

(cc) *Interference:* A discharge that, alone or in conjunction with discharges from other sources, both:

(1) inhibits or disrupts the POTW, its treatment processes or operations, or its sludge processes, use or disposal; and therefore

(2) is a cause of a violation of any requirement of the POTW's NPDES permit (including an increase in the magnitude or duration of a violation) or of the prevention of sewage sludge use or disposal in compliance with the following statutory provisions and regulations or permits issued there under (or more stringent state or local regulations): Section 405 of the Clean Water Act, the

Solid Waste Disposal Act (SWDA) (including Title II, more commonly referred to as the Resource Conservation and Recovery Act (RCRA), and including state regulations contained in any state sludge management plan prepared pursuant to subtitle D of the SWDA), the Clean Air Act, the Toxic Substances Control Act, and the Marine Protection, Research and Sanctuaries Act.

(dd) *Manager:* The General Manager of the District, or his or her designated representative.

(ee) *Mass Limit Rate:* The weight of material discharged to the sewer system during a given time interval. Unless otherwise specified, the mass limit rate shall mean pounds per day of a constituent or combination of constituents.

(ff) *Maximum Allowable Discharge Limit:* The maximum concentration of a pollutant allowed to be discharged at any time, determined from the analysis of any discrete or composite sample collected, independent of the industrial flow rate and the duration of the sampling event.

(gg) *Medical Waste:* Any waste, liquid or solid, generated by a medical facility which may pose a health and/or safety threat to Agency personnel.

(hh) *National Pretreatment Standard, Pretreatment Standard, or Standard:* Any regulation containing pollutant discharge limits or Best Management Practices promulgated by the EPA in accordance with section 307 (b) and (c) of the Clean Water Act, that applies to industrial users. This term includes prohibitive discharge limits established pursuant to 40 CFR 403.5.

(ii) *New Source:* Any building, structure, facility, or installation from which there is or may be a discharge of pollutants, the construction of which commenced after the publication of proposed pretreatment standards under Section 307c of the Clean Water Act that will be applicable to such source if such standards are thereafter promulgated, provided that:

(1) The building, structure, facility or installation is constructed at a site at which no other source is located; or

(2) The building, structure, facility or installation totally replaces the process or production equipment that causes the discharge of pollutants at an existing source; or

(3) The production or wastewater generating processes of the building, structure, facility or installation are substantially independent of an existing source at the same site. In determining whether these are substantially independent, factors such as the extent to which the new facility is integrated with the existing plant, and the extent to which the new facility is engaged in the same general type of activity as the existing source should be considered

(jj) *pH:* A measure of the acidity or alkalinity of a solution, expressed in standard units.

(kk) *POTW Treatment Plant:* That portion of the Publicly Owned Treatment Works which is designed to provide treatment (including recycling and reclamation) of municipal sewage and industrial waste.

(ll) *Pass Through:* A discharge that exits the POTW into waters of the United States in quantities or concentrations that, alone or in conjunction with a discharge or discharges from other sources, is a cause of a violation of any requirement of the POTW's NPDES permit (including an increase in the magnitude or duration of a violation).

(mm) *Person:* Any individual, partnership, co-partnership, firm, company, corporation, association, joint stock company, trust, estate, governmental entity, or any other legal entity; or their legal representatives, agents, or assigns. This definition includes any Federal, State and local governmental entity.

(nn) *Pesticides:* Total pesticides identified in Table 1, Section 307 of the Clean Water Act which are detectable by EPA approved methods.

(oo) *Phenolics:* Compounds having one or more hydroxy groups attached to a benzene or other polynuclear aromatic hydrocarbons as tested using EPA Method 420.

(pp) *Pollution:* An alteration of the quality of the waters of the state by waste to a degree which unreasonably affects such waters for beneficial use or facilities which serve such beneficial uses. Pollution may include contamination.

(qq) *Pollution Prevention:* Activities which reduce the amount of pollutants discharged to the community sewer, without transferring those pollutants to the air or land, including reduction in the use of chemicals containing regulated pollutants, reduction in the generation of wastes which contain pollutants, recovery and recycling of wastes and/or improved pretreatment of wastes prior to discharge.

(rr) *Polychlorinated biphenyls (PCB)*: Total PCBs detectable by EPA approved methods.

(ss) *Polynuclear Aromatic Hydrocarbons (PAH):* Total organic pollutants containing more than one fused aromatic ring, which are detectable by EPA approved methods.

(tt) *Premise:* A parcel of real estate including any improvements thereon which is determined by the Agency to be a single user for purposes of receiving, using, and paying for service.

(uu) *Pretreatment Requirement:* Any substantive or procedural pretreatment requirement other than a national pretreatment standard.

(vv) *Private Sewer Lateral:* The pipeline that conveys wastewater from a residence or any other building foundation to the main District sewer line.

(ww) *Prohibited Discharge Standards or Prohibited Discharges:* Absolute prohibitions against the discharge of certain substances; these prohibitions appear in Section 2.01 of this ordinance.

(xx) *Publicly Owned Treatment Works or "POTW":* A treatment works as defined by section 212 of the Clean Water Act, which is owned by a state or municipality (as defined by section 502(4) of the Clean Water Act). This definition includes any devices and systems used in the storage, treatment, recycling, and reclamation of municipal sewage or industrial wastes of a liquid nature. It also includes sewers, pipes, and other conveyances only if they convey wastewater to a POTW treatment plant. The term also means the municipality as defined in section 502(4) of the Clean Water Act, that has jurisdiction over the indirect discharges to and the discharges from such a treatment works.

(yy) *Sample points:*

(1) Facility (FAC) – a sample point whereby the total, combined waste stream, both process and domestic, from a facility is monitored for compliance with local discharge limitations or requirements.

(2) "001" – a sample point whereby a facility's federally regulated process waste stream/streams, immediately after treatment, is/are monitored for compliance with federally imposed discharge limitations or requirements.

(3) "002" – a sample point whereby all process waste streams (non-categorical), excluding domestic, from a facility are monitored for compliance with local discharge limitations.

(zz) *Septic Tank Waste:* Any sewage from holding tanks such as vessels, chemical toilets, campers, trailers, and septic tanks.

(aaa) *Severe Property Damage:* Substantial physical damage to property, damage to the treatment facilities which causes them to become inoperable, or substantial and permanent loss of natural resources which can reasonably be expected to occur in the absence of a bypass. Severe property damage does not mean economic loss caused by delays in production.

(bbb) *Significant Industrial User (SIU):*

(1) A user subject to categorical pretreatment standards; or

(2) A user that:

(i) Discharges an average of twenty-five thousand (25,000) gallons per day or more of process wastewater to the POTW (excluding sanitary, noncontact cooling, and boiler blowdown wastewater);

(ii) Contributes a process waste stream which makes up five (5) percent or more of the average dry weather hydraulic or organic capacity of the POTW treatment plant; or

(iii) Is designated as such by the Agency on the basis that it has a reasonable potential for adversely affecting the POTW's operation or for violating any pretreatment standard or requirement.

(3) Upon finding that a User meeting the criteria in Subsection (2) of this part has no reasonable potential for adversely affecting the POTW's operation or for violating any Pretreatment Standard or Requirement, the Agency may at any time, on its own initiative or in response to a petition received from an Industrial User, and in accordance with procedures in 40 CFR 403.8(f)(6), determine that such User should not be considered a Significant Industrial User.

(ccc) *Significant Noncompliance:* An industrial user is in significant noncompliance with applicable pretreatment requirements if any violation meets one or more of the following criteria:

(1) Chronic violations of wastewater discharge limits defined here as those in which 66 percent or more of all the measurements taken for the same pollutant parameter during a 6-month period exceed (by any magnitude) a numeric Pretreatment Standard or Requirement, including instantaneous limits, as defined by 40 CFR 403.3(l).

(2) Technical Review Criteria (TRC) violations, defined here as those in which 33 percent or more of all the measurements taken for the same pollutant parameter during a 6-month period are equal to or exceed the product of the numeric Pretreatment Standard or Requirement, including instantaneous limits, as defined by 40 CFR 403.3(l) multiplied by the applicable TRC (TRC = 1.4 for BOD, TSS, fats, oil and grease and 1.2 for all other pollutants except pH.)

(3) Any other violation of a Pretreatment Standard or Requirement as defined by 40 CFR 403.3(l) (daily maximum, long-term average, instantaneous limit, or narrative standard) that the POTW determines has caused, alone or in combination with other discharges, Interference or Pass Through (including endangering the health of POTW personnel or the general public).

(4) Any discharge of a pollutant that has caused imminent endangerment to human health, welfare or to the environment or has resulted in the POTW's exercise of its emergency authority under paragraph (f)(1)(vi)(B) of 40 CFR 403.8 to halt or prevent such a discharge.

(5) Failure to meet, within 90 days after the due date, a compliance schedule milestone contained in a local control mechanism or enforcement order for starting construction, completing construction or attaining final compliance.

(6) Failure to provide, within 45 days after the due date, required reports such as baseline monitoring reports, 90-day compliance reports, periodic self-monitoring reports and reports on compliance with compliance schedules.

(7) Failure to accurately report noncompliance.

(8) Any other violation or group of violations, which may include a violation of Best Management Practices (BMPs), that the Agency determines will adversely affect the operation or implementation of the local pretreatment program.

(ddd) *Slug Load or Slug:* Any discharge at a flow rate or concentration which could cause a violation of the prohibited discharge standards in Section 2.01 of this ordinance. A Slug Discharge is any Discharge of a non-routine, episodic nature, including but not limited to an accidental spill or a non-customary batch Discharge, that has a reasonable potential to cause Interference or Pass Through, or in any other way violate the POTW's regulations, Local Limits or Permit conditions.

(eee) *Stormwater:* The runoff generated when precipitation from rain and snowmelt events flow over land or impervious surfaces without percolating into the ground.

(fff) *The District:* Union Sanitary District.

(ggg) *Total Halogenated Organics (THO):* Total halogenated organic pollutants identified in Table 1, Section 307 of the Clean Water Act which are detectable by EPA approved methods.

(hhh) *Total Organics (TO):* Total organic pollutants as specified by the Agency which are detectable by EPA approved methods.

(iii) *Total Toxic Organics (TTO):* Total organic pollutants including polynuclear aromatic hydrocarbons (PAHs), but excluding pesticides, PCBs, and phenols, which are detectable by EPA approved methods. The TTO value is determined as the summation of all quantifiable values greater than 0.01 milligrams per liter for the regulated toxic organics.

(jjj) *Unpolluted Water:* Water to which no constituent has been added, either intentionally or accidentally, which would render such water unacceptable to the

agency having jurisdiction thereof for disposal to storm or natural drainages or directly to surface waters.

(kkk) *User:* Any person that discharges, causes, or permits the discharge of wastewater into a community sewer.

(lll) *User Classification:* A classification of user based on the latest edition of the Standard Industrial Classification (SIC) Manual prepared by the Executive Office of Management and Budget.

(mmm) *Waste:* Includes sewage and any and all other waste substances, liquid, solid, gaseous, or radioactive, associated with human habitation, or of human or animal origin, or from any producing, manufacturing, or processing operation of whatever nature, including such waste placed within containers of whatever nature prior to, and for purposes of, disposal.

(nnn) Wastewater*:* Waste and water, whether treated or untreated, discharged into or permitted to enter a community sewer.

(ooo) *Wastewater Constituents and Characteristics:* The individual chemical, physical, bacteriological and radiological parameters, including volume and flow rate and such other parameters that serve to define, classify or measure the contents, quality, quantity, and strength of wastewater.

(ppp) *Wastewater Discharge Permit:* A legal document used as a control mechanism to ensure compliance with regulations that grants revocable permission to discharge wastewater to the sanitary sewer, including the following types of Wastewater Discharge Permit:

Class I Permit	-	Issued to Significant Industrial Users both Categorical and Non-Categorical
Class II Permit	-	Issued to Non-Significant Industrial Users.
Class III Permit	-	Issued to Industrial or Commercial Users determined by the Agency not to fall in the Class I or Class II categories.
General Permit	-	Similar to a Class III permit, issued to Industrial or Commercial User groups that perform similar functions or activities.
Groundwater Permit	-	Issued for the discharge of treated groundwater from contaminated site remediation, excavation groundwater or potable water related projects.

Temporary Permit - Issued for single or short term (less than one year) discharges of wastewater or contaminated ground water.

(qqq) *Waters of the State:* Any water, surface or underground, including saline waters within the boundaries of the state.

1.03 Analytical and Sampling Methodology and Procedures

(a) The method and procedures utilized for all analyses which are reported under the requirements of these regulations shall be as specified by the provisions of 40 CFR Part 136.

(b) The methods and procedures utilized for all sampling performed and/or reported under the requirements of these regulation shall be as specified by the provisions of 40 CFR Part 136.

(c) If 40 CFR Part 136 does not contain sampling or analytical techniques for the pollutant in question, sampling and analyses must be performed in accordance with procedures approved by the District or EPA.

(d) Analytical data collected to satisfy reporting requirements must be based on data obtained through appropriate sampling and analysis performed during the period covered by the report and is representative of conditions occurring during the reporting period.

Section 2

REGULATIONS

2.01 Sewer Use Requirements

2.01.1 Prohibited Discharges

(a) General Prohibitions: No User shall introduce or cause to be introduced into the POTW any pollutant or wastewater which causes Pass Through or Interference. These general prohibitions apply to all Users of the POTW whether or not they are subject to categorical Pretreatment Standards or any other National, State or Local Pretreatment Standards or Requirements.

(b) Specific Prohibitions: No user shall introduce or cause to be introduced into the community sewer system any pollutants, substances, or wastewater which cause,

threaten to cause, or are capable of causing, either alone or by interaction with other substances:

(1) a fire or explosion, including but not limited to discharges with a closed cup flashpoint of less than 140° F (60° C) using the test methods specified in 40CFR261.21;

(2) obstruction of flow in a sewer system or injury of the system or damage to the wastewater collection, treatment, or disposal facilities;

(3) danger to life or safety of personnel;

(4) a nuisance or prevention of the effective maintenance or operation of the sewer system, through having a strong, unpleasant odor;

(5) air pollution by the release of toxic or malodorous gases or malodorous gas-producing substances;

(6) interference with the wastewater treatment process; and/or pass through of any pollutant which causes a violation of the Agency's National Pollutant Discharge Elimination System (NPDES) permit;

(7) the Agency's effluent or any other product of the treatment process, residues, sludges, or scums, to be unsuitable for reclamation and reuse or to interfere with the reclamation process;

(8) a detrimental environmental impact or a nuisance in the waters of the state or a condition unacceptable to any public agency having regulatory jurisdiction over the Agency;

(9) discoloration or any other condition in the quality of the Agency's treatment works effluent in such a manner that receiving water quality requirements established by law cannot be met;

(10) conditions at or near the Agency's treatment works which violate any statute or any rule, regulation, or ordinance of any public agency or state or federal regulatory body;

(11) quantities or rates of flow which overload the Agency's collection or treatment facilities or cause excessive Agency collection or treatment costs, or may use a disproportionate share of the Agency facilities;

(12) the evolution of toxic gases, fumes, or vapors in quantities injurious to the health and safety of Agency personnel;

(13) the temperature at the treatment plant headworks to exceed 104° F (40°C) or temperature which will inhibit biological activity in the treatment plant resulting in Interference;

(14) wastewater having a pH less than 5.0 or greater than 12.0, or otherwise causing corrosive structural damage to the collection system, POTW or equipment;

(15) an exceedance of the permitted Mass Limit Rate established in the Local Limits or discharge permits; or

(16) settlement of materials or obstruction to flow resulting in interference, such as, but not limited to, sand, mud, glass, metal, filings, diatomaceous earth, cat litter, asphalt, wood, bones, hair, fleshings, food packaging, product containers and non-dispersible products.

2.01.2 No person shall discharge the following wastes to the community sewer:

(a) Pollutants, including oxygen-demanding pollutants (for example, COD), released in a discharge at a flow rate and/or pollutant concentration which, either singly or by interaction with other pollutants, will cause interference with the POTW;

(b) Wastewater containing any radioactive wastes or isotopes except in compliance with applicable State or Federal regulations;

(c) Sludges, screenings, or other residues (solid or liquid) from the pretreatment of industrial wastes;

(d) Medical wastes, except as specifically authorized by the Agency;

(e) All prescription and non-prescription (over the counter) pharmaceutical drugs or medications;

(f) Wastewater causing, alone or in conjunction with other sources, the treatment plant's effluent to fail a toxicity test;

(g) Detergents, surface-active agents, or other substances which may cause excessive foaming in the POTW;

(h) Wastewater containing pesticides, dioxins and dioxin-like compounds, and/or polychlorinated biphenyls (PCB) at levels detectable by EPA approved methods;

(i) Hazardous wastes or materials, as defined by California Code of Regulations Title 22 or Subtitles C and D of the Federal Resource Conservation and Recovery Act;

Pollutants, substances, or wastewater prohibited by this section shall not be processed or stored in such a manner that they could be discharged to the POTW.

2.02 Requirements for Dental Facilities that Remove or Place Amalgam Fillings

(a) All owners and operators of dental facilities that remove or place amalgam fillings shall comply with the following waste management practices:

(1) No person shall rinse chair-side traps, vacuum screens, or amalgam separator equipment in a sink or other connection to the community sewer per 40CFR441.30(b)(1). Such traps, vacuum screens or amalgam separator equipment must be recycled or disposed of in an appropriate manner according to recycler or equipment manufacturer.

(2) Amalgam waste and other hazardous solutions shall be properly collected, packaged, labeled, stored, managed, and disposed.

(3) Dental unit water lines, chair-side traps, and vacuum lines that discharge amalgam process wastewater to a community sewer must not be cleaned with oxidizing or acidic cleaners, including but not limited to bleach, chlorine, iodine and peroxide that have a pH lower than 6 or greater than 8 per 40CFR441.30(b)(2).

(4) Owners and operators of dental facilities shall ensure that all staff members who handle amalgam waste are trained in the proper handling, management and disposal of mercury-containing material and other hazardous solutions and shall maintain training records that will be made available for inspection by an employee of the District during normal business hours.

(5) The use of bulk mercury is prohibited. Only pre-capsulated dental amalgam is allowed.

(b) All owners and operators of dental vacuum suction systems, except as set forth in subsection (c) of this section, shall comply with the following:

(1) Install amalgam separator device compliant with 40CFR441.30 (existing offices) or 40CFR441.40 (new offices). Amalgam separator device must achieve at least a 95 percent removal efficiency. No bypass of separator device or related plumbing shall be allowed.

(2) Per 40CFR441.50, a One-Time Compliance Report must be submitted to the District from existing offices by no later than October 12, 2020, or 90 days after a transfer of ownership. For new offices, a One-Time Compliance Report must be submitted to the District no later than 90 days following the introduction of wastewater into the community sewer.

(3) Amalgam separators shall be installed, operated and maintained in accordance with manufacturer recommendations per 40CFR441.30 (existing offices) or 40CFR441.40 (new offices).

(4) Dental Dischargers or an agent or representative of the dental discharger must maintain for a minimum of three years and make available for immediate inspection the following documentation per 40CFR441.50(b):

- Documentation of the date, person(s) conducting the inspection, and results of each inspection of the amalgam separator(s) and a summary of follow-up actions, if needed.

- Documentation of amalgam retaining container replacement (including installation date, as applicable).

- Documentation of all dates that collected dental amalgam is picked up or shipped for proper disposal in accordance with 40 CFR 261.5(g)(3), and the name of the permitted or licensed treatment, storage or disposal facility receiving the amalgam waste.

- Documentation of any repair or replacement of an amalgam separator, including the date, person(s) making the repair or replacement, and a description of the repair or replacement (including make and model).

- Dischargers or an agent or representative of the dental discharger must maintain and make available for inspection in either physical or electronic form the manufacturers operating manual for the current device.

(c) Specialty dental offices where the practice of dentistry consists exclusively of one or more of the following are exempt from this requirement (Section 2.02) per 40CFR441.10(c), provided that the District receives written certification that removal or placement of amalgam fillings does not take place:

- Orthodontics
- Periodontics
- Oral and Maxillofacial Surgery
- Oral and Maxillofacial Radiology
- Oral Pathology or Oral Medicine
- Prosthodontics

2.03 Prohibitions on Storm Drainage and Groundwater

Storm water, groundwater, rainwater, street drainage, subsurface drainage or yard drainage shall not be discharged through direct or indirect connections to a community

sewer unless a permit is issued by the Agency. The Agency may approve the discharge of such water at its discretion and only when no reasonable alternative method of disposal is available.

If the permit is granted for the discharge of such water into a community sewer, the user shall pay the applicable charges and fees and meet such other conditions as required by the Agency. For the purpose of permits and fees, the discharge shall be considered a Class I discharge subject to permit requirements in Section 4 and discharge limitations or prohibitions of Section 2. The Agency retains the right to terminate the discharge at any time for cause. Each discharge permit must be reviewed on an annual basis.

2.04 Acceptance of Groundwater from Remediation Projects

Wastewater generated from the cleanup of spills, leaking underground storage tanks, groundwater remediation, monitoring wells, excavation groundwater, potable water projects or other similar sources shall not be discharged through direct or indirect connections to a community sewer unless a discharge permit is issued by the Agency. The Agency may approve the discharge of such water at its discretion only when no reasonable alternative method of disposal is available.

If a discharge permit is granted for the discharge of such water into the community sewer, the user shall pay the applicable charges and fees and meet such other conditions as required by the Agency. For the purpose of permits and fees, the discharge shall be considered a Class I discharge subject to permit requirements in Section 4 and discharge limitations or prohibitions of Section 2. The Agency retains the right to terminate the discharge at any time for cause. Each discharge permit must be reviewed on an annual basis.

2.05 Prohibition on Unpolluted Water

Unpolluted water, including but not limited to cooling water, process water, or blow-down from cooling towers or evaporative coolers, will not be discharged through direct or indirect connection to a community sewer unless a permit is issued by the Agency. The Agency may approve the discharge of such water at its discretion and only when no reasonable alternative method of disposal is available.

If authorization is granted for the discharge of such water into a community sewer, the user shall pay the applicable user charges and fees and shall meet such other requirements and/or conditions as required by the Agency.

2.06 Limitations on Radioactive Wastes

No person shall discharge or cause to be discharged any radioactive waste into a community sewer except:

(a) when a person is authorized to use radioactive materials by the State Department of Health or other governmental agency empowered to regulate the use of radioactive materials; and

(b) when the waste is discharged in strict conformity with the requirements of the United States Nuclear Regulatory Commission, the United States Department of Energy, and/or the California Radiation Control Regulations; and

(c) when the person is in compliance with all rules and regulations of all other applicable regulatory agencies.

2.07 Limitations on the Use of Garbage Grinders

Waste from garbage grinders, food waste liquefiers, aerobic and anaerobic bio-digesters, food composters and similar devices shall not be discharged into the community sewer excepts as approved in writing by the Agency.

Garbage grinders and similar devices shall not be used for grinding plastic, paper products, inert materials, or garden refuse.

2.08 Limitations on Points of Discharge

No person shall discharge any substances directly into a manhole or other opening in a community sewer other than through an approved building sewer unless, upon written application by the user and payment of the applicable user charges and fees, the Agency issues a permit for such direct discharges.

2.09 Waste Holding Tanks, Vessels and Containers

No person shall discharge any holding tank or vessel waste into a community sewer unless a wastewater discharge permit is issued by the Agency. Unless otherwise allowed by the Agency under the terms and conditions of the permit, a separate permit must be secured for each separate discharge. This permit may state the specific location of discharge, the time of day the discharge is to occur, the volume of the discharge and the wastewater constituents and characteristics. If a permit is granted for discharge of such waste into a community sewer, the user shall pay the applicable charges and fees and shall meet such other conditions as required by the Agency. An exception to the above is that no permit will be required for discharge of domestic wastes from mobile home holding

tanks provided that such discharges are made into an Agency approved facility designed to receive such wastes.

2.10 Limitations on Wastewater Strength

(a) The Manager is authorized to establish Local Limits or Best Management Practices (BMP's) pursuant to 40 CFR 403.5(c).

(b) The following pollutant limits are established to protect against Pass Through and Interference.

(1) The following limits are maximum allowable discharge limits (the maximum concentration of a pollutant allowed to be discharged at any time, determined from the analysis of any discrete or composite sample collected, independent of the industrial flow rate and the duration of the sampling event). Limits for metals are for total recoverable metals.

No person shall discharge wastewater containing in excess of:

Arsenic	0.35	mg/L
Cadmium	0.2	mg/L
Copper	2.0	mg/L
Cyanide	0.65	mg/L
Lead	1.0	mg/L
Mercury	0.01	mg/L
Nickel	1.0	mg/L
Silver	0.5	mg/L
Total Chromium	2.0	mg/L
Zinc	3.0	mg/L
TTO	2.13	mg/L
Formaldehyde	50.0	mg/L
Phenolics	5.0	mg/L

(2) No person shall discharge wastewater:

(A) having a temperature higher than 150° F (65.5° C), or any thermal discharge which as a result of temperature and/or volume causes the influent of the wastewater treatment plant to exceed 104° F (40° C);

(B) containing more than 300 mg/L of oil or grease of animal or vegetable origin, unless specifically approved by the District. The District may approve, on a case by case basis, a modification to the analytical method if the discharger can demonstrate that constituents in their wastewater interfere with the freon extraction, hexane extraction or current EPA approved procedure and have no negative impact on the POTW and/or receiving waters.

(C) containing more than 100 mg/L of oil or grease of mineral or petroleum origin;

(D) having a pH lower than 6.0 or higher than 12.0 units, or otherwise causing corrosive structural damage to the collection system, POTW or equipment, unless specifically approved by the District. Under no circumstances will a pH of less than 5.0 or higher than 12.5 pH units be approved.

(3) The following limits for ammonia are maximum allowable average concentrations. Limits are for total ammonia expressed as nitrogen. Limits are tiered based on average daily flow, which is the arithmetic average of the permitted industrial user's daily flows for the preceding calendar year and is equivalent to the flow rate used in establishing sewer service charges:

Average Daily Flow	**Ammonia Limit**
<10,000 gallons per day (gpd)	225 mg/L as N
10,000 – 25,000 gpd	150 mg/L as N
>25,000 gpd	75 mg/L as N

Compliance determination shall be based on the average of all valid and representative analyses occurring within a 6-month period

For industrial users holding permits issued prior to January 1, 2014, the Manager may issue compliance schedules for ammonia as described in Sections 6.09 and 6.10. In no case may these compliance schedules exceed 5 years. All new permitted industrial users must comply with these limits upon initial discharge.

(4) Additional Limits

Limits for pollutants not listed in this section 2.10 may be established in a wastewater discharge permit based on available treatment technology, existing wastewater conditions in the District's facilities or other factors determined by the Manager. The Manager may also establish wastewater strength limits on the wastewater discharge permits at locations within a premises whenever non-process water many dilute wastewater discharging from side sewers.

(c) National Categorical Standards, found in 40 CFR Chapter I, Subchapter N, Parts 405-471, as may be amended from time to time, are hereby incorporated into these regulations. Effluent limitations promulgated by the Clean Water Act shall apply in any instance where they are more stringent than those in these regulations.

(d) Additional limits specific to the discharge of groundwater or surface water. No person shall discharge groundwater or surface water in excess of:

Total Halogenated Organics (THO)	0.02mg/L
Total Organics	2.0mg/L

2.10.1 Mass Limit Rate Determination

(a) Mass Limit Rates for non-compatible or compatible pollutants that are present or anticipated in the User's wastewater discharge may be set for each User and made an applicable part of each User's wastewater discharge permit. These rates shall be based on Maximum Allowable Local Discharge Limits, Federal Categorical Pretreatment Standards, the User's average daily wastewater discharge for the past three years, the most recent representative data, or other data or factors determined by the Manager

(b) To verify the User's operating data, the User may be required to submit an inventory of all wastewater streams and/or records indicating production rates.

(c) The District may revise limits or Mass Limit Rates previously established in the User's permit at any time, based on current or anticipated operating data of the User or the District the District's ability to meet NPDES limits, or changes in the requirements of regulatory agencies.

(d) The excess use of water to establish artificially high flow rate for the Mass Limit Rate determination is prohibited.

2.11 Prohibition on Slug Discharges

No user shall discharge any pollutant, including oxygen-demanding pollutants, at a flow rate and/or pollutant concentration which causes or threatens to cause interference with the wastewater treatment process. For the purposes of this section, any discharge at a flow rate or concentration which could cause a violation of the prohibited discharge standards or limitations in Section 2 of this ordinance shall be deemed a slug discharge.

2.12 Prohibition on Use of Dilution

Except where expressly authorized to do so by an applicable pretreatment standard or requirement, no user shall increase the use of process water, or in any other way attempt to dilute a discharge as a partial or complete substitute for adequate pretreatment to achieve compliance with a pretreatment standard, requirement or discharge limitation.

2.13 Prohibition of Bypass

(a) Bypass of pretreatment equipment and/or discharge points is prohibited and the Agency may take enforcement action against any user for bypass unless:

(1) bypass was unavoidable to prevent loss of life, personal injury, or severe property damage;

(2) there were no feasible alternatives to the bypass, such as the use of auxiliary treatment facilities, retention of untreated wastes, or maintenance during normal periods of equipment downtime. This condition is not satisfied if adequate backup equipment should have been installed in the exercise of reasonable engineering judgment to prevent a bypass which occurred during normal periods of equipment downtime or preventative maintenance; and

(3) the industrial user submits the following notices:

(i) If an Industrial User knows in advance of the need for a bypass, it shall submit prior notice to the Agency, if possible at least ten days before the date of the bypass.

(ii) An Industrial User shall submit oral notice of an unanticipated bypass that exceeds applicable Pretreatment Standards to the Agency within 24 hours from the time the Industrial User becomes aware of the bypass. A written submission shall also be provided within 5 days of the time the Industrial User becomes aware of the bypass. The written submission shall contain a description of the bypass and its cause; the duration of the bypass, including exact dates and times, and, if the bypass has not been corrected, the anticipated time it is expected to continue; and steps taken or planned to reduce, eliminate, and prevent reoccurrence of the bypass. The Agency may waive the written report on a case-by-case basis if the oral report has been received within 24 hours.

(b) The Agency may approve an anticipated bypass, after considering its adverse effects, if the Agency determines that it will meet the three conditions specified in part (a) of this section.

2.14 Prohibition of the Discharge of Chemical Solutions and Sludges

No user shall, without prior written approval of the Agency, discharge any unused or waste chemical solutions to the community sewer. For the purposes of this section, such materials include, but are not limited to, concentrated solutions utilized within any commercial or industrial operation, containerized liquids of any description, spoiled or otherwise unusable raw materials of any description, or spoiled or otherwise unusable products of any description.

The Agency may approve the discharge of such wastes at its sole and absolute discretion.

2.15 Prohibition of the Discharge of Petroleum or Mineral Oil Causing Pass-through or Interference

Notwithstanding the provisions of section 2.10(b), no user may discharge petroleum oil, non-biodegradable cutting oil or other products of mineral origin in any amount that causes interference or pass-through.

2.16 Prohibition of the Discharge of Trucked or Hauled Wastes

The discharge of any trucked or otherwise hauled wastes to the sanitary sewer system is prohibited except as the Agency may permit under the provisions of section 2.09.

2.17 Prohibition of the Discharge from Containment Areas

The discharge of waste (solid or liquid), wastewater or chemicals from a chemical storage containment area is prohibited unless expressly authorized by the Agency.

2.18 Prohibition of Unapproved Sanitary Sewer Connections

Unapproved connections to the community sewer are strictly prohibited.
Any building sewers that have not been permitted, inspected, or where capacity and/or current sewer service charges have not been paid, are subject to the conditions of Ordinance 34, Article 2, Section 7, Connection of Building Drains.

Section 3

WASTEWATER VOLUME DETERMINATION

3.01 Application

Section 3 does not apply to "dwelling units" as defined in Agency Ordinance 31.

3.02 Metered Water Supply

User charges and fees shall be applied against the total amount of water used from all sources unless, in the opinion of the Agency, significant portions of water received are

not discharged to a community sewer. The total amount of water used from public and private sources will be determined by means of public meters or private meters, installed and maintained at the expense of the user and approved by the Agency.

(a) Metered Wastewater Volume and Metered Diversions. For users where, in the opinion of the Agency, a significant portion of the water received from any metered source does not flow into a community sewer because of the principal activity of the user or removal by other means, the user charges and fees will be applied against the volume of water discharged from such premises into a community sewer. Written notification and proof of the diversion of water must be provided by the user if the user is to avoid the application of the user charges and fees against the total amount of water used from all sources. The user may install a meter of a type and at a location approved by the Agency and at the user's expense. Such meters may measure either the amount of sewage discharged or the amount water diverted. Such meters shall be tested for accuracy at the expense of the user when deemed necessary by the Manager.

(b) Users With Source Meters. For users who, in the opinion of the Agency, divert a significant portion of their metered water supply from a community sewer, the user charges may be based upon an estimate of the volume to be discharged, provided the user obtains authorization from the agency and pays the applicable user charges and fees. The estimate must include the method and calculations used to determine the wastewater volume and may consider such factors as the number of fixtures, seating capacity, population equivalents, annual production of goods and services, or such other determinations of water use necessary to estimate the wastewater volume discharged.

(c) Users Without Source Meters. The agency may require the installation of water meters; however, for users where, in the opinion of the Agency, it is unnecessary or impractical to install meters, the quantity of wastewater may be based upon an estimate prepared by the Agency. This estimate shall be based upon a rational determination of the wastewater discharged and may consider such factors as the number of fixtures, seating capacity, population equivalent, annual production of goods and services, or such other determinants of water use necessary to estimate the wastewater volume discharged.

Section 4

ADMINISTRATION

4.01 Application

Section 4 does not apply to "dwelling units" as defined in Agency Ordinance 31.

4.02 Discharge Reports

(a) The Agency, or the Authority through the Agency, may require that any person discharging or proposing to discharge wastewater into a community sewer file a periodic discharge report. The discharge report may include, but not be limited to, nature of process, volume, rates of flow, mass emission rate, production quantities, hours of operation, number and classification of employees, or other information which relates to the generation of waste including wastewater constituents and characteristics in the wastewater discharge and sample analysis demonstrating compliance with Section 2. Such reports may also include the chemical constituents and quantity of liquid or gaseous materials stored on site even though they may not normally be discharged.

(b) The agency may prohibit, authorize or condition any discharge into the sanitary sewer in accordance with this ordinance and applicable state and federal regulations, whether or not a Discharge Permit is issued.

(c) Acceptance of any new discharge is contingent on available capacity in the collection system and/or treatment plant, as determined by the District Engineering Division and Operations Department.

4.03 Wastewater Discharge Permits

4.03.1 Class I Permits. All significant industrial users (SIU), as defined in Section 1.02 (bbb), must have a current Class I Wastewater Discharge Permit.

Each new SIU, if not connected to a community sewer, must obtain a Class I Wastewater Discharge Permit before connecting to or discharging into a community sewer.

Any user currently connected to the community sewer who in the future is deemed to be an SIU shall be required to obtain a Class I permit. User will be required to pay all applicable fees as set forth in the Agency's current fee schedule.

4.03.2 Class II Permits. Users who, as determined by the Agency, do not fall within the requirements for a Class I Permit, yet require some sampling and regular monitoring of wastewater discharge, if connected to a community sewer, may be required to obtain a Class II Wastewater Discharge Permit before connecting to or discharging into a community sewer. User will be required to pay all applicable fees as set forth in the Agency's current fee schedule.

4.03.3 Class III Permits. Users who, as determined by the Agency, do not fall within the requirements for a Class I or II permit, yet have a wastewater discharge that the Agency may decide requires oversight due to potential risks associated with said discharge, if connected to a community sewer, may be required to obtain a Class III wastewater

discharge permit before connecting to or discharging into the community sewer. User will be required to pay all applicable fees as set forth in the Agency's current fee schedule. Class III permits may include General permits or any other as determined by the Manager.

4.03.4 Temporary and/or Groundwater Permits. Users who, as determined by the Agency, do not fall within the requirements for a Class I, II, or III permit, yet have a wastewater discharge that the Agency may decide requires oversight due to potential risks associated with said discharge if connected to the community sewer. Temporary permits will be issued for one time, or for a discharge period not to exceed one year. User will be required to pay all applicable fees as set forth in the Agency's current fee schedule.

The Manager may modify wastewater discharge requirements for the following types of facilities:

(a) Industrial Facilities that have a wastewater discharge with no treatment (beyond simple filtration) in place and do not require routine monitoring or inspection.

(b) Commercial Facilities that have a wastewater discharge that may have detectable amounts of one or more priority or conventional pollutants present in their waste stream. The Agency may require some level of treatment at such facilities, however, do not require routine monitoring or inspection. (Examples: dentists, photo processors, printers, and restaurants.)

4.04 Permit Application

Users seeking a Wastewater Discharge Permit shall complete and file with the Manager an application in the form prescribed by the Manager and accompanied by the applicable fees. The applicant may be required to submit, in units and terms appropriate for evaluation, the following information:

(a) name, address, and SIC number of applicant;

(b) volume of wastewater to be discharged;

(c) sampling of wastewater to determine constituents and characteristics including, but not limited to, those listed in Section 2.10 as determined by a laboratory approved by the Agency;

(d) time and duration of discharge;

(e) average and 30-minute peak wastewater flow rates, including daily, monthly, and seasonal variations, if any;

(f) site plans, floor plans, mechanical and plumbing plans, and details to show all sewers and appurtenances by function, size, location, and elevation;

(g) Description of activities, facilities, and plant processes on the premises, including a list of all raw materials and chemicals used or stored at the facility which are, or could accidentally or intentionally be, discharged to the POTW;

(h) each product produced by type, amount, and rate of production;

(i) number and type of employees, and hours of work;

(j) description of wastewater treatment system(s), and/or procedures, including system design, piping, layout, hydraulic and pollutant removal capacity, design criteria, calibration and maintenance procedures, alarm systems, sample points, treatment chemicals, excursion response procedures, and any other information necessary to evaluate the adequacy and appropriateness of the treatment system and/or procedures.

(k) management plans, including any or all of the following: solvent management plan, best management practice plan, slug control plan, hazardous materials management plan, emergency/violation response plan, and/or pollution prevention plan.

(l) any other information as may be deemed by the Manager to be necessary to evaluate the permit application.

The Manager will evaluate the data furnished by the user and may require additional information. After evaluation and acceptance of the data furnished, the Manager may issue a Wastewater Discharge Permit subject to terms and conditions provided herein.

4.05 Permit Conditions

Wastewater Discharge Permits shall be expressly subject to all provisions of these regulations and all other regulations, user charges, and fees established by the Agency. The conditions of Wastewater Discharge Permits shall be uniformly enforced by the Manager in accordance with these regulations, and applicable state and federal regulations. Permits may contain the following:

(a) A statement that indicates the duration of the wastewater discharge permit;

(b) A statement that the wastewater discharge permit is nontransferable without prior notification to the Agency in accordance with Section 4.08 of this ordinance;

(c) Effluent Limits, including Best Management Practices (BMPs), based on applicable pretreatment standards;

(d) Self-monitoring, sampling, reporting, notification, and record-keeping requirements. These requirements shall include an identification of pollutants (or Best

Management Practices) to be monitored, sampling location, sampling frequency, and sample type based on Federal, State, and local law.

(e) A statement of applicable civil and criminal penalties for violation of Pretreatment Standards and Requirements, and any applicable compliance schedule. Such schedule may not extend the time for compliance beyond that required by applicable Federal, State, or local law;

(f) Limits on the average and/or maximum rate of discharge, time of discharge, and/or requirements for flow regulation and equalization;

(g) The unit charge or schedule of user charges and fees for the wastewater to be discharged to a community sewer;

(h) The average and maximum wastewater constituent concentrations and characteristics;

(i) Limits on rate and time of discharge or requirements for flow regulations and equalization;

(j) Requirements for installation of inspection and sampling facilities;

(k) Pretreatment requirements;

(l) Specifications for monitoring programs which may include sampling locations, frequency and method of sampling, number, types and standards for tests, reporting schedules, and Best Management Practices;

(m) Requirements for submission of technical reports, self-monitoring reports, or discharge reports, including, but not limited to baseline monitoring reports, compliance schedule progress reports, reports of compliance with categorical pretreatment standard deadlines, periodic reports of continued compliance, or any report required by 40 CFR 403.12, and/or any other reports as required by the Agency;

(n) Requirements for maintaining plant records relating to wastewater discharge as specified by the Agency, and affording Agency access thereto;

(o) Mean and maximum mass emission rates, or other appropriate limits when incompatible pollutants (as defined by section 1.02(ee)) are proposed or presented in the user's wastewater discharge;

(p) Notification requirements;

(q) Requirements for the development and implementation of spill control plans or other special conditions including management practices necessary to adequately prevent accidental, unanticipated, or non-routine discharges;

(r) Development and implementation of pollution prevention plans to reduce the amount of pollutants discharged to the POTW;

(s) Other conditions as deemed appropriate by the Agency to insure compliance with these regulations;

(t) Requirements to control Slug Discharges, if determined by the Agency to be necessary.

4.06 Duration of Permits

Permits shall be issued for a specified time period, not to exceed five years. A permit may be issued for a period less than one year or may be stated to expire on a specific date. The terms and conditions of the permit may be subject to modification and change by the Agency during the life of the permit. The user shall be informed of any proposed changes in his or her permit at least 30 days prior to the effective date of change. Any changes or new conditions in the permit shall include a reasonable time schedule for compliance.

4.07 Modification of Permits

The Agency may modify an individual/general wastewater discharge permit for good cause, including, but not limited to, the following reasons:

(1) To incorporate any new or revised Federal, State, or local Pretreatment Standards or Requirements;

(2) To address significant alterations or additions to the User's operation, processes, or wastewater volume or character since the time of the individual/general wastewater discharge permit issuance;

(3) A change in the POTW that requires either a temporary or permanent reduction or elimination of the authorized discharge;

(4) Information indicating that the permitted discharge poses a threat to the Agency's POTW, Agency personnel, the beneficial use of the Agency's bio-solids, or the receiving waters;

(5) Violation of any terms or conditions of the individual/general wastewater discharge permit;

(6) Misrepresentations or failure to fully disclose all relevant facts in the wastewater discharge permit application or in any required reporting;

(7) Revision of or a grant of variance from categorical Pretreatment Standards pursuant to 40 CFR 403.13;

(8) To correct typographical or other errors in the individual/general wastewater discharge permit; or

(9) To reflect a transfer of the facility ownership or operation to a new owner or operator where requested in accordance with Section 4.08.

4.08 Wastewater Discharge Permit Transfer

Wastewater discharge permits may be transferred to a new owner or operator only if the permittee gives at least thirty (30) days advance notice to the Agency and the Agency approves the wastewater discharge permit transfer. The notice to the Agency must include a written certification by the new owner or operator which:

(a) States that the new owner and/or operator has no immediate intent to change the facility's operations and processes;

(b) Identifies the specific date on which the transfer is to occur; and

(c) Acknowledges full responsibility for complying with the existing wastewater discharge permit.

Failure to provide advance notice of a transfer renders the wastewater discharge permit void as of the date of facility transfer.

4.09 Revocation of Permit

Any user who violates the following conditions of the permit or any conditions of these regulations, or applicable state and federal regulations may be subject to permit revocation:

(a) failure of the user to factually report the wastewater constituents and characteristics of his or her discharge;

(b) violations of conditions of the permit.

(c) Failure to notify the Agency of significant changes to the wastewater prior to the changed discharge;

(d) Failure to provide prior notification to the Agency of changed conditions pursuant to Section 4.19 of this ordinance;

(e) Misrepresentation or failure to fully disclose all relevant facts in the wastewater discharge permit application;

(f) Falsifying self-monitoring reports;

(g) Tampering with monitoring equipment;

(h) Refusing to allow the Agency personnel timely access to the facility premises and records;

(i) Failure to meet effluent limitations;

(j) Failure to pay fines;

(k) Failure to pay sewer charges,

(l) Failure to meet compliance schedules;

(m) Failure to complete a wastewater survey or the wastewater discharge permit application;

(n) Failure to provide advance notice of the transfer of business ownership of a permitted facility; or

(o) Violation of any pretreatment standard or requirement, or any terms of the wastewater discharge permit or this ordinance.

4.10 Monitoring Facilities

The Agency may require the user to construct at his or her own expense, monitoring facilities to allow inspection, sampling, and flow measurement of the building sewer or internal drainage systems and may also require sampling or metering equipment to be provided, installed, and operated at the user's expense. The monitoring facility should normally be situated on the user's premises; but the Agency may, when such a location would be impractical or cause undue hardship on the user, allow the facility to be constructed in the public street or sidewalk area with the approval of the public agency having jurisdiction over that street or sidewalk, and located so that it will not be obstructed by landscaping or parked vehicles.

If the monitoring facility is inside the user's fence, there shall be accommodations to allow access for Agency personnel, such as a gate secured with an Agency lock. There shall be ample room in or near such sampling manhole to allow accurate sampling and

compositing of samples for analysis. The manhole, sampling, and measuring equipment shall be maintained at all times in a safe and proper operating condition at the expense of the user. Any temporary or permanent obstruction to safe and easy access to the facility to be inspected and/or sampled shall be promptly removed by the user at the written or oral request of the Manager and shall not be replaced. The costs of clearing such access shall be borne by the user.
Whether constructed on public or private property, the sampling and monitoring facilities shall be provided in accordance with the Agency's requirements and all applicable local agency construction standards and specifications. Construction shall be completed within 90 days following written notification by the Agency unless a time extension is otherwise granted by the Agency.

4.11 Inspection and Sampling

The Agency may inspect the facilities of any user to ascertain whether the purpose of these regulations is being met and all requirements are being complied with. Persons or occupants of premises where wastewater is created or discharged shall allow the Agency or its representative ready access at all reasonable times to all parts of the premises for the purposes of inspection, sampling, records examination and copying, or in the performance of any of their duties. The Agency shall have the right to set up on the user's property such devices as are necessary to conduct sampling or metering operations. Where a user has security measures in force which would require proper identification and clearance before entry into their premises, the user shall make necessary arrangements with their security personnel so that, upon presentation of suitable identification, personnel from the Agency will be permitted to enter without delay for the purposes of performing their specific responsibilities. Agency personnel will not be required to sign release forms prior to entry and may take appropriate photographs as necessary to document compliance and/or non-compliance with the provisions of this ordinance. Any temporary or permanent obstruction to safe and easy access to the facility to be inspected and/or sampled shall be promptly removed by the user at the written or oral request of the Manager and shall not be replaced. The costs of clearing such access shall be borne by the user. Unreasonable delays in allowing the Manager access to the user's premises shall be a violation of this ordinance.

4.12 Search Warrants

If the Manager has been refused access to a building, structure, or property, or any part thereof, and is able to demonstrate probable cause to believe that there may be a violation of this ordinance, or that there is a need to inspect and/or sample as part of a routine inspection and sampling program of the Agency designed to verify compliance with this ordinance or any permit or order issued here under, or to protect the overall public health, safety and welfare of the community, then the Manager may seek issuance of an inspection warrant and/or a search warrant.

4.13 Pretreatment

Users shall make wastewater acceptable under the limitations established herein before discharging to any community sewer. Any facilities required to pretreat wastewater to a level acceptable to the Agency shall be provided and maintained at the user's expense. Detailed plans showing the pretreatment facilities, design criteria and operating procedures shall be submitted to the Agency for review and shall be acceptable to the Agency before construction of the facility. The review of such plans, design criteria, and operating procedures will in no way relieve the user from the responsibility of modifying the facility as necessary to produce an effluent acceptable to the Agency under the provisions of these regulations. Any subsequent changes in the pretreatment facilities or method of operation shall be reported to and be acceptable to the Agency.

4.14 Protection from Accidental Discharge

Each user shall provide protection from accidental discharge of prohibited materials or other wastes regulated by these regulations. Such facilities shall be provided and maintained at the user's expense. Detailed plans showing facilities and operating procedures to provide this protection shall be submitted to the Agency for review and shall be acceptable to the Agency before construction of the facility.

The review of such plans and operating procedures will in no way relieve the user from the responsibility of modifying the facility as necessary to provide the protection necessary to meet the requirements of this section.

4.15 Confidential Information

Information and data on a user obtained from reports, surveys, wastewater discharge permit applications, wastewater discharge permits, and monitoring programs, and from the Agency's inspection and sampling activities, shall be available to the public without restriction, unless the user specifically requests, and is able to demonstrate to the satisfaction of the Manager, that the release of such information would divulge information, processes, or methods of production entitled to protection as trade secrets under applicable State and/or Federal law. Any such request must be asserted at the time of submission of the information or data. When requested and demonstrated by the user furnishing a report that such information should be held confidential, the portions of a report which might disclose trade secrets or secret processes shall not be made available for inspection by the public but shall be made available immediately to the EPA upon request. Such information will also be made available immediately upon request to other governmental agencies for uses related to the NPDES program or pretreatment program, and in enforcement proceedings involving the person furnishing the report. Wastewater constituents and characteristics and other "effluent data" as defined by 40 CFR 2.302 will not be recognized as confidential information and will be available to the public without restriction.

4.16 Signature Requirement

(a) All reports and/or permit applications received and/or required under these regulations shall be signed:

(1) By a responsible corporate officer, if the user submitting the reports is a corporation. For the purpose of this paragraph, a responsible corporate officer means:

(i) a president, secretary, treasurer, or vice president of the corporation in charge of a principal business function, or any other person who performs similar policy or decision-making functions for the corporation, or;

(ii) the manager of one or more manufacturing, production, or operating facilities, provided the manager is authorized to make management decisions which govern the operation of the regulated facility including having the explicit or implicit duty of making major capital investment recommendations, and initiate and direct other comprehensive measures to assure long-term environmental compliance with environmental laws and regulations; can ensure that the necessary systems are established or actions taken to gather complete and accurate information for control mechanism requirements; and where authority to sign documents has been assigned or delegated to the manager in accordance with corporate procedures.

(2) By a general partner or proprietor if the user submitting the reports is a partnership or sole proprietorship, respectively.

(3) By a duly authorized representative of the individual designated in paragraph (1) or (2);

(i) The authorization is made in writing by the individual designated in paragraph (1) or (2);

(ii) The authorization specifies either an individual or a position having responsibility for the overall operation of the facility from which the industrial discharge originates, such as the position of plant manager, operator of a well, or well field superintendent, or a position of equivalent responsibility, or having overall responsibility for environmental matters for the company; and

(iii) The written authorization is submitted to the Agency.

(4) If an authorization under paragraph (3) of this section is no longer accurate because a different individual or position has responsibility for the overall operation of the facility, or overall responsibility for environmental matters for the company, a new authorization satisfying the requirements of paragraph (3)

of this section must be submitted to the Agency prior to or together with any reports to be signed by an authorized representative.

(b) Reports and applications must include the following certification statement:

I certify under penalty of law that this document and all attachments were prepared under my direction or supervision in accordance with a system designed to assure that qualified personnel properly gather and evaluate the information submitted. Based on my inquiry of the person or persons who manage the system, or those persons directly responsible for gathering the information, the information submitted is, to the best of my knowledge and belief, true, accurate, and complete. I am aware that there are significant penalties for submitting false information, including the possibility of fine and imprisonment for knowing violations.

4.17 Retention of Records

Users subject to the reporting requirements of this ordinance shall retain, and make available for inspection and copying, all records of information obtained pursuant to any monitoring activities required by this ordinance, any additional records of information obtained pursuant to monitoring activities undertaken by the User independent of such requirements, and documentation associated with Best Management Practices established under Section 2.10(a), including but not limited to discharge reports, permits, self-monitoring data, pretreatment system process control logs, and relevant correspondence (whether or not required by these regulations). All records must be maintained by the user for a period of not less than three (3) years. All such records shall be made available for inspection and copying by a duly authorized representative of the Agency or any other governmental entity having jurisdiction. The retention period may be extended in the case of unresolved litigation or at any time at the request of the Agency, the State or US EPA.

4.18 Notices to Employees

In order that employees of users be informed of Agency requirements, users shall make available to their employees copies of these regulations together with such other wastewater information and notices which may be furnished by the Agency from time to time directed toward more effective water pollution control. A notice shall be furnished and permanently posted on the user's bulletin board advising employees whom to call in case of an accidental discharge in violation of these regulations.

4.19 Preventive Measures

Any direct or indirect connection or entry point for persistent or deleterious wastes to the user's plumbing or drainage system should be eliminated. Where such action is

impractical or unreasonable, the user shall appropriately label such entry points to warn against discharge of such wastes in violation of these regulations.

4.20 Notification of Changed Conditions

Each user must notify the Agency of any planned significant changes to the user's operations or system which might alter the nature, quality, or volume of its wastewater discharge prior to implementation of said change.

(a) The Manager may require the user to submit such information as may be deemed necessary to evaluate the changed condition, including the submission of a wastewater discharge permit application under Section 4.04 of this ordinance.

(b) The Manager may issue a wastewater discharge permit under Section 4.03 of this ordinance or modify an existing wastewater discharge permit under Section 4.06 of this ordinance in response to changed conditions or anticipated changed conditions.

(c) For purposes of this requirement, significant changes include, but are not limited to, significant flow increases or decreases (greater than 25%), modification of any pretreatment system, bypass of any portion of the pretreatment system, installation or removal of process tanks or equipment, discharge of any previously unreported pollutants, and the closure of a facility due to purchase by another party, relocation, changed business conditions, or other factor affecting the continued operation of the facility.

4.21 Notification of Hazardous Waste Discharge

(a) All industrial users discharging any substance which, if otherwise disposed of, would be a hazardous or acutely hazardous waste under 40 CFR 261, must comply with the reporting requirements of 40 CFR 403.12(p)(1) and (3) unless exempted under the provisions of 40 CFR 403.12(p)(2).

(b) In the case of any notification made under section (a) above, the industrial user shall certify that it has a program in place to reduce the volume and toxicity of hazardous wastes generated to the degree it has determined to be economically practical. The Agency may accept a copy of a hazardous waste reduction or minimization plan as otherwise required by law.

(c) This provision does not create a right to discharge any substance not otherwise permitted to be discharged by this ordinance, a permit issued thereunder, or any applicable Federal or State law.

4.22 Special Agreements

Special agreements and arrangements between the Agency and any persons or agencies may be established when, in the opinion of the Agency, unusual or extraordinary circumstances compel special terms and conditions. Under no circumstances, however, will any special agreement or arrangement be established which contravenes any federal pretreatment regulation, categorical pretreatment standard, or any other provision of state or federal law.

4.23 Immediate Notification of Slug Loadings to the POTW

All SIU's shall notify the Manager immediately of any slug loading, as defined by 40 CFR 403.5(b), or any other discharge that could adversely affect the POTW.

4.24 Industrial User Self-Monitoring Requirements

Samples collected to satisfy reporting requirements must be based on data obtained through appropriate sampling and analysis performed during the period covered by the report, based on data that is representative of conditions occurring during the reporting period.

(a) Except as indicated in Sections (b) or (c) below, the User must collect wastewater samples using 24-hour flow-proportional composite sampling techniques, unless time-proportional composite sampling or grab sampling is authorized by the District. Where time-proportional composite sampling or grab sampling is authorized by the District, the samples must be representative of the discharge. Using protocols (including appropriate preservation) specified in 40 CFR Part 136 and appropriate EPA guidance, multiple grab samples collected during a 24-hour period may be composited prior to the analysis as follows: for cyanide, total phenols, and sulfides, the samples may be composited in the laboratory or in the field; for volatile organics and oil and grease, the samples may be composited in the laboratory. Composite samples for other parameters unaffected by the compositing procedures as documented in approved EPA methodologies may be authorized by District, as appropriate. In addition, grab samples may be required to show compliance with Instantaneous Limits.

(b) Samples for oil and grease, temperature, pH, cyanide, phenolics, sulfides, and volatile organic compounds must be obtained using grab collection techniques.

(c) For sampling required in support of baseline monitoring and 90-day compliance reports required in Section 4.25(c) below [40 CFR 403.12(b) and (d)], A minimum of four (4) grab samples must be used for pH, cyanide, phenolics, oil and grease, sulfide and volatile organic compounds for facilities for which historical sampling data do not exist; for facilities for which historical sampling data are available, the District may

authorize a lower minimum. For the reports required by (40 CFR 403.12(e) and 403.12(h), the Industrial User is required to collect the number of grab samples necessary to assess and assure compliance by with applicable Pretreatment Standards and Requirements.

(d) If a user subject to reporting requirement monitors any regulated pollutant at a designated sampling location more frequently than required, the results of this monitoring shall be reported.

(e) The Manager may specify the type of sampling equipment that must be installed and used. pH monitoring and Flow monitoring equipment installed at an industrial user's sampling location shall be calibrated at the frequency specified in the industrial user's wastewater discharge permit or at the frequency recommended by the manufacturer.

(f) If 40 CFR Part 136 does not contain sampling or analytical techniques for the pollutant in question, or where the EPA determines that the Part 136 sampling and analytical techniques are inappropriate for the pollutant in question, sampling and analyses shall be performed using validated analytical methods or any other applicable sampling and analytical procedures suggested by the Manager or other parties approved by the EPA. Samples shall be analyzed at the discharges expense, by a laboratory accredited by the State of California Department of Public Health for such analysis.

(g) The Manager may require self-monitoring for facilities for which a wastewater discharge permit has not been issued.

4.25 Submission of Reports

The Agency has authority to require all Significant Industrial Users and any other designated dischargers to submit reports and schedules within a time-frame directed by the Agency. Required reports and schedules, include, but are not limited to, the following:

(a) Wastewater Discharge Surveys

(b) Chemical Use Reports

(c) Baseline Monitoring Reports (BMR) and 90-Day Monitoring Reports containing information as required under 40 CFR 403.12(b) and (d):

(1) Within (i)180 days after the effective date of a categorical standard in the case of an existing industrial user, or 90 days prior to commencement of discharge for a new source, all industrial users subject to categorical Pretreatment Standards must submit a Baseline Report; and (ii) 90-Days after commencement of discharge for a new source, all industrial users subject to categorical Pretreatment Standards must submit a 90-Day report. All Baseline Reports and 90-Day Report must contain the following information:

(A) The name and address of the facility including the name of the operator and owners;

(B) A list of any environmental control permits held by or for the facility;

(C) A brief description of the nature, average rate of production, and Standard Industrial Classification of the operation(s) carried out by such Industrial User. This description should include a schematic process diagram which indicates points of Discharge to the POTW from the regulated processes.

(D) The measured average daily and maximum daily flow, in gallons per day, to the POTW from each of the following:

(i) Regulated process streams; and

(ii) Other streams as necessary to allow use of the combined wastestream formula. The Control Authority may allow for verifiable estimates of these flows where justified by cost or feasibility considerations.

(E) The Pretreatment Standards applicable to each regulated process, and the results of sampling and analysis identifying the nature and concentration (or mass, where required by the Standard or Control Authority) of regulated pollutants in the Discharge from each regulated process. Both daily maximum and average concentration (or mass, where required) shall be reported. The sample shall be representative of daily operations;

(F) A statement, reviewed by an authorized representative of the Industrial User and certified to by a qualified professional, indicating whether Pretreatment Standards are being met on a consistent basis and, if not, whether additional operation and maintenance (O and M) and/or additional pretreatment is required for the Industrial User to meet the Pretreatment Standards and Requirements; and

(G) If additional pretreatment and/or O and M will be required to meet the Pretreatment Standards; the shortest schedule by which the Industrial User will provide such additional pretreatment and/or O and M. The completion date in this schedule shall not be later than the compliance date established for the applicable Pretreatment Standard.

New sources must give estimates of information requested in paragraphs (D) and (E) and must include information on the method of pretreatment that will be used to meet applicable pretreatment standards.

(d) Compliance Schedule Progress Reports

(e) Periodic Self-Monitoring Reports

(f) Periodic Report of Continued Compliance (PRCC) containing information as required under 40 CFR 403.12(e) and (h)
All Significant Industrial Users must, at a frequency determined by the Manager, submit no less than twice per year (June and December [or on dates specified by Manager]) reports indicating the nature, concentration of pollutants in the discharge which are limited by Pretreatment Standards and the measured or estimated average and maximum daily flows for the reporting period. In cases where the Pretreatment Standard requires compliance with a Best Management Practice (BMP) or pollution prevention alternative, the User must submit documentation required by the Manager or the Pretreatment Standard necessary to determine the compliance status of the User.

All periodic compliance reports must be signed and certified in accordance with Section 4.16 of this ordinance.

All wastewater samples must be representative of the User's discharge. Wastewater monitoring and flow measurement facilities shall be properly operated, kept clean, and maintained in good working order at all times. The failure of a User to keep its monitoring facility in good working order shall not be grounds for the User to claim that sample results are unrepresentative of its discharge.

If a User subject to the reporting requirement in this section monitors any regulated pollutant at the appropriate sampling location more frequently than required by the Agency, using the procedures prescribed in 40 CFR 403.12(g)(5), the results of this monitoring shall be included in the report.

(g) Hazardous Materials Management Plans

(h) Best Management Practice Plans

(i) Slug Control Plans containing information as required under 40 CFR 403.8(f)(2) (vi).

(j) Source Reduction Evaluation Review and Plans (SB14) and other pollution prevention plans

(k) SARA III Reports

(l) Written responses to Notices of Violation

(m) Facility Closure Plans

(n) Any data obtained from self-monitoring performed more frequently than required by the Agency

(o) Solvent Management Plan

(p) Any other reports, written documents, and/or analytical results as deemed necessary by the Agency, to determine a user's compliance status with local, state and federal limits or requirements.

Section 5

WASTEWATER CHARGES AND FEES

5.01 Schedule of Charges and Fees

The agency may adopt ordinances for the collection of charges and fees for, but not limited to, the following purposes:

- Capacity Charges
- Sewer Service Charges
- Annexation Fees
- Construction Permit Fees
- Construction Inspection Fees
- Wastewater Discharge Permit Fees

5.02 Environmental Compliance Charges and Fees

The Agency may adopt reasonable fees for reimbursement of costs of setting up and operating its Environmental Compliance Program including, but not limited to, the following:

(a) Fees for wastewater discharge permit applications including the cost of processing such applications;

(b) Fees for monitoring, inspection, and surveillance procedures including the cost of sample collection and analyzing a user's discharge, reviewing monitoring reports submitted by users, and conducting inspections of the user's facilities;

(c) Fees for reviewing and responding to discharge violations, accidental discharges and spills, and related enforcement activities.

(d) Fees for filing appeals; and

(e) Other fees as the Agency may deem necessary to carry out the requirements contained herein. These fees relate solely to the matters covered by this ordinance and are separate from all other fees, fines, and penalties chargeable by the Agency.

Section 6

ENFORCEMENT

6.01 Notification of Discharge

Users shall notify the Agency immediately upon accidentally discharging wastes in violation of these regulations and/or discharging any slug loading to enable countermeasures to be taken by the Agency to minimize damage to the community sewer, treatment facility, treatment processes, and the receiving waters.

This notification shall be followed, within five days of the date of occurrence, by a detailed written statement describing the causes of the accidental discharge and the measures being taken to prevent future occurrence.

Such notification will not relieve users of liability for any expense, loss, or damage to the sewer system, treatment plant, or treatment process, or for any fines imposed on the Agency on account thereof under section 13350 of the California Water Code, or for violations of section 5650 of the California Fish and Game Code.

6.02 Notification of Violation

When the Manager finds that a user has violated, or continues to violate, any provision of this ordinance, a wastewater discharge permit or order issued here under, or any other pretreatment standard or requirement, the Manager may serve upon that user a written Notice of Violation. Within 15 days of the receipt of this notice, an explanation of the violation and a plan for the satisfactory correction and prevention thereof, to include specific required actions, shall be submitted by the user to the Manager. Submission of this plan in no way relieves the user of liability for any violations occurring before or after receipt of the Notice of Violation. Nothing in this section shall limit the authority of the Manager to take any action, including emergency actions or any other enforcement action, without first issuing a Notice of Violation.

6.03 Consent Orders

The Manager may enter into Consent Orders, assurances of voluntary compliance, or other similar documents establishing an agreement with any user responsible for noncompliance. Such documents will include specific action to be taken by the user to correct the noncompliance within a time period specified by the document. Such documents shall have the same force and affect as the administrative orders issued pursuant to Sections 6.05 and 6.06 of this ordinance and shall be judicially enforceable.

6.04 Show Cause Hearing

The Manager may order a user which has violated, or continues to violate, any provision of this ordinance, a wastewater discharge permit or order issued here under, or any other pretreatment standard or requirement, to appear before the Manager and show cause why the proposed enforcement action should not be taken. Notice shall be served on the user specifying the time and place for the meeting, the proposed enforcement action, the reasons for such action, and a request that the user show cause why the proposed enforcement action should not be taken. The notice of the meeting shall be served personally or by registered or certified mail (return receipt requested). Such notice may be served on any authorized representative of the user. A Show Cause hearing shall not be a bar against, or prerequisite for, taking any other action against the user.

6.05 Administrative Orders

When the Manager finds that a user has violated, or continues to violate, any provision of this ordinance, a wastewater discharge permit or order issued here under, or any other pretreatment standard or requirement, the Manager may issue an order to the user responsible for the discharge directing that the user come into compliance within a specified time. If the user does not come into compliance within the time provided, sewer service may be discontinued unless adequate treatment facilities, devices, or other related appurtenances are installed and properly operated. Administrative orders also may contain other requirements to address the noncompliance, including additional self-monitoring and management practices designed to minimize the amount of pollutants discharged to the sewer. An administrative order may not extend the deadline for compliance established for a pretreatment standard or requirement, nor does an administrative order relieve the user of liability for any violation, including any continuing violation. Issuance of a compliance order shall not be a bar against, or a prerequisite for, taking any other action against the user.

6.06 Issuance of Cease and Desist Orders

When the Agency finds that a discharge of wastewater has taken place in violation of prohibitions or limitations of these regulations, or the provisions of a Wastewater Discharge Permit, the Manager may issue an order to cease and desist, and direct that those not complying with such prohibitions, limits, requirements, or provisions:

(a) comply forthwith;

(b) comply in accordance with a time schedule set forth by the Agency; or

(c) take such appropriate remedial or preventive action as may be needed to properly address a continuing or threatened violation, including halting operations and/or terminating the discharge.

6.07 Legal Authority to Administer Fines

In accordance with Section 54739 of the California Government Code, the agency may require any of the following:

(a) Pretreatment of any industrial waste which the local agency determines is necessary in order to meet standards established by the federal or California state government or other regulatory agencies or which the local agency determines is necessary in order to protect its treatment works or the proper and efficient operation thereof or the health or safety of its employees or the environment.

(b) The prevention of the entry of such industrial waste into the collection system and treatment works.

(c) The payment of excess costs to the system for supplementary treatment plants, facilities, or operations needed as a result of allowing the entry into the collection system and treatment works of such industrial waste.

(d) The provisions of this section shall be in addition to other requirements provided for in this or any other Agency ordinance.

6.08 Administrative Procedures and Penalties

(a) The agency may issue an administrative complaint to any person who violates any requirement adopted or ordered by the agency pursuant to paragraph (a) and (b) of Section 6.07. The administrative complaint shall allege the act or failure to act that constitutes the violation of the agency's requirements, the provisions of law authorizing civil liability to be imposed, and the proposed civil penalty.

(b) The administrative complaint shall be served by personal delivery or certified mail on the person subject to the agency's discharge requirements and shall inform the person served that a hearing shall be conducted within 60 days after the person has been served. In event no request for hearing is filed within 50 days after the service of the administrative complaint, the right to a hearing will be deemed waived. The hearing shall be before a hearing officer designated by the governing board of the agency. The person who has been issued an administrative complaint may waive the right to a hearing, in which case the agency shall not conduct a hearing. A person dissatisfied with the decision of the hearing officer may appeal to the governing board of the agency within 30 days of notice of the hearing officer's decision.

(c) If after any default in requesting a hearing, the holding of the hearing, or the conclusion of an appeal, it is found that the person has violated reporting or discharge requirements, the hearing officer or board may assess a civil penalty against that person in determining the amount of the civil penalty, the hearing officer or board may take into consideration all relevant circumstances, including, but not limited to, the extent of harm caused by the violation, the economic benefit derived

through any noncompliance, the nature and persistence of the violation, the length of time over which the violation occurs and corrective action, if any, attempted or taken by the discharger.

(d) Civil Penalties. In accordance with Section 54740.5 of the California Government Code, Civil penalties may be imposed by the agency as follows:

(1) In an amount which shall not exceed two thousand dollars ($2,000) for each day for failing or refusing to furnish technical or monitoring reports.

(2) In an amount which shall not exceed three thousand dollars ($3,000) for each day for failing or refusing to timely comply with any compliance schedule established by the local agency.

(3) In an amount which shall not exceed five thousand dollars ($5,000) per violation for each day for discharges in violation of any waste discharge limitation, permit condition, or requirement issued, reissued, or adopted by the local agency.

(4) In an amount which does not exceed ten dollars ($10) per gallon for discharges in violation of any suspension, cease and desist order or other orders, or prohibition issued, reissued, or adopted by the agency.

(5) The amount of any civil penalties imposed under this section which have remained delinquent for a period of 60 days after finality of the decision, can become a lien against the real property of the discharger from which the discharge originated resulting in the imposition of the civil penalty. In accordance with the procedures specified in Health & Safety Code Section 5473 et seq., the Board of Directors can have the lien imposed against the real property to be assessed on the tax roll, to be collected at the same time and in the same manner, together with and not separately from, general taxes, and shall be delinquent at the same time and thereafter be subject to the same delinquency penalties.

(6) In addition, in the event that the penalty is imposed as a court judgment in the same manner as in an arbitration award, the judgment thereon shall be renewable in accordance with the provisions of California Code of Civil Procedures Sections 683.110 through 683.220.

(7) Any legal action, including arbitration, shall allow attorneys' fees and costs to the prevailing party.

(e) Administrative Penalties

Administrative penalties shall be imposed for all violations of Union Sanitary District Pretreatment Ordinance No. 36 for which a Notice of Violation would be issued. The violations are categorized as discharge or non-discharge violations.

(1) Non-discharge Violations

Non-discharge violations shall be considered any violation of a reporting requirement, timeline, schedule or any other violation of Ordinance 36. A warning letter will be issued to the permittee informing them of an impending Notice of Violation and imposition of a six hundred dollar ($600) penalty for any future violations.

(2) Discharge Violation

A Discharge Violation is specifically related to a discharge event or release. The penalty for an actual discharge violation shall be one thousand four hundred dollars ($1400) for every incident or event.

These penalties are not exclusive and failure to comply could result in the District taking additional enforcement actions up to and including civil penalties and abatement.

(f) All moneys collected under this section shall be deposited in a special account of the agency and shall be made available for inspector training, environmental program enhancement, the monitoring, treatment, and control of discharges into the Agency's sanitary sewer system or for other mitigation measures.

(g) Unless appealed, orders setting administrative civil penalties shall become effective and final upon issuance thereof, and payment shall be made within 30 days. Copies of these orders shall be served by personal service or by certified mail upon the party served with the administrative complaint and upon other persons who appeared at the hearing and requested a copy.

(h) The Agency may, at its option, elect to petition the superior court to confirm any order establishing civil penalties and enter judgment in conformity therewith as though it were an arbitration award, in accordance with the provisions of California Code of Civil Procedure, Sections 1285 through 1287.6.

(i) No penalties shall be recoverable under this section for any violation for which civil liability is recovered under Section 7.06 of this ordinance.

(j) Any party aggrieved by a final order issued by the governing board of the agency under this Section, after granting review of the order of a hearing officer, may obtain review of the order of the board in the superior court by filing in the court a petition for writ of mandate within 30 days following the service of a copy of a decision and order issued by the board. Any party aggrieved by a final order of a hearing officer issued under this Section, for which the board denies review, may obtain review of the order of the hearing officer in the superior court by filing in the court a petition for

writ of mandate within 30 days following service of a copy of a decision and order denying review by the board.

(k) If no aggrieved party petitions for writ of mandate within the time provided by this section, an order of the board or a hearing officer shall not be subject to review by any court or agency, except that the board may grant review on its own motion of an order issued under this Section after the expiration of the time limits set by that section.

(l) The evidence before the court shall consist of the record before the board, including the hearing officer's record, and any other relevant evidence which, in the judgment of the court, should be considered to effectuate and implement policies of this division. In every such case, the court shall exercise its independent judgment on the evidence.

(m) Except as otherwise provided in this section, subdivisions (e) and (f) of Section 1094.5 of the California Government Code or the Code or Civil Procedure shall govern proceedings pursuant to this section.

6.09 Submission of Compliance Time Schedule

When the Agency finds that a discharge of wastewater has been taking place in violation of prohibitions or limitations prescribed in these regulations, or wastewater source control requirements, effluent limitations or pretreatment standards, or the provisions of a Wastewater Discharge Permit or at any time the Agency determines a time schedule to be necessary to comply with the requirements of Section 4.13, the Agency may require the user to submit for approval, with such modifications as it deems necessary, a detailed time schedule of specific actions which the user shall take in order to prevent or correct a violation of the requirements.

6.10 Compliance Schedule Progress Reports

The following conditions shall apply to the compliance schedule required by Section 6.09 of this ordinance:

(a) The schedule shall contain progress increments in the form of dates for the commencement and completion of major events leading to the construction and operation of additional pretreatment required for the user to meet the applicable pretreatment standards (such events include, but are not limited to, hiring an engineer, completing preliminary and final plans, executing contracts for major components, commencing and completing construction, and beginning and conducting routine operation);

(b) No increment referred to above shall exceed nine (9) months;

(c) The user shall submit a progress report to the Manager as specified but no later than fourteen (14) days following each date in the schedule and the final date of compliance including, as a minimum, whether or not it complied with the increment of progress, the reason for any delay, and, if appropriate, the steps being taken by the user to return to the established schedule; and

(d) In no event shall more than nine (9) months elapse between such progress reports to the Manager.

6.11 Appeals

Any user, permit applicant, or permit holder affected by any decision, action, or determination, including cease and desist orders made by the Manager or another employee of the Agency in interpreting or implementing the provisions of this ordinance or in any permit issued herein, may file with the Manager a written appeal or request for reconsideration, as applicable, within ten days of such decision, action, or determination, setting forth in detail the facts supporting the appeal or request for reconsideration.

If the ruling made by the Manager is unsatisfactory to the person appealing or requesting reconsideration, he or she may file a written appeal to the Agency's governing body within ten days after notification of Agency action. The written appeal shall be heard by the governing body within 30 days from the date of filing or as soon thereafter as reasonably possible. The Agency's governing body shall make a final ruling on the appeal within 30 days of the meeting. The Manager's decision, action, or determination shall remain in effect during such period of appeal. The determination of an appeal by the governing body of the Agency shall constitute a final determination of the Agency and shall be subject to judicial review.

6.12 Reports of Potential Problems

(a) In the case of any discharges including, but not limited to, accidental discharges, discharges of a non-routine, episodic nature, a non-customary batch discharge, or a slug load, that may cause potential problems for the POTW, the user shall immediately telephone and notify the Agency of the incident. This notification shall include the location of the discharge, type of waste, concentration and volume, if known, and corrective actions taken by the user and any other information the Agency deems appropriate.

(b) A notice shall be permanently posted on the user's bulletin board or other prominent place advising employees who to call in the event of a discharge described in paragraph A, above. Employers shall ensure that all employees, who may cause such a discharge to occur, are advised of the emergency notification procedure.

(c) All Users are required to notify the Agency of any changes at their facility affecting the potential for a Slug Discharge.

6.13 Notice of Violation/Repeat Sampling and Reporting

If sampling performed by a user indicates a violation, the user must notify the Agency within twenty-four (24) hours of becoming aware of the violation. The user shall also repeat the sampling and analysis and submit the results of the repeat analysis to the Agency within thirty (30) days after becoming aware of the violation.
Within five (5) days following such discharge, the user shall, unless waived by the Agency, submit a detailed written report describing the cause(s) of the discharge and the measures to be taken by the user to prevent similar future occurrences. Such notification shall not relieve the user of any expense, loss, damage, or other liability which may be incurred as a result of damage to the POTW, natural resources, or any other damage to person or property; nor shall such notification relieve the user of any fines, penalties, or other liability which may be imposed pursuant to this ordinance.

6.14 Reports from Unpermitted Users

All users not required to obtain a wastewater discharge permit shall provide appropriate reports to the Agency as the Manager may require.

6.15 Public Notification of Dischargers Found to be in Significant Non-Compliance

At an interval of not less than once per year, the Agency will publish the identities of any user(s) which is (are) found to be in significant non-compliance of any national pretreatment standard, discharge limitation or prohibition, or any other requirement of these regulations. The definition of significant non-compliance shall be as specified in Section 1.02 (bbb). The publication shall occur in the newspaper of general circulation that provides meaningful public notice within the service area of the Agency.

Section 7

ABATEMENT

7.01 Public Nuisance

Discharge of wastewater in any manner in violation of these regulations or of any order issued by the Manager as authorized by these regulations, is hereby declared a public nuisance and shall be corrected or abated as directed by the Manager. Any person

creating a public nuisance shall be subject to provisions of Agency codes or ordinances governing such nuisance.

7.02 Recovery of Expenses

In the event a discharge of wastewater occurs from a private sewer lateral that creates or threatens to create a public nuisance that the Agency must abate as directed by the Manager, the Agency may seek recovery of the cost of time and materials to abate said discharge from the property owner as well as interest and attorneys' fees as provided by Health & Safety Code § 5473.10.

7.03 Injunctive Relief

When the Agency finds that a User has violated, or continues to violate, any provision of this ordinance, an individual wastewater discharge permit, a general permit, or order issued hereunder, or any other Pretreatment Standard or Requirement, the Agency may petition the appropriate Court through the District's Attorney for the issuance of a temporary or permanent injunction, as appropriate, which restrains or compels the specific performance of an individual wastewater discharge permit, general permit, order or other requirement imposed by this ordinance on activities of the User. The Agency may also seek such other action as is appropriate for legal and/or equitable relief, including a requirement for the User to conduct environmental remediation. A petition for injunctive relief shall not be a bar against, or a prerequisite for, taking any other action against a User.

7.04 Damage to Facilities

When a discharge of wastes causes an obstruction, damage, or any other impairment to Agency facilities, the Agency may assess a charge against the user for the work required to clean or repair the facility and add such charge to the user's charges and fees.

7.05 Civil Penalties

Any person who violates any provision of these regulations or permit conditions, or who discharges wastewater which causes pollution, or who violates any cease and desist order, prohibition, effluent limitation, national standard of performance, pretreatment or toxicity standard, shall be liable civilly to penalties imposed by the Agency against which the violation occurs as provided for in Section 6.07 of this Ordinance.

7.06 Court Imposed Civil and Criminal Penalties

The Agency may refer any violations of these regulations to the office of the Alameda County District Attorney for civil or criminal prosecution under any applicable statute or provision of law.

In accordance with Section 54740 of the California Government Code:

(a) Any person who violates any requirement adopted or ordered by the Agency pursuant to Section 6.07 of this ordinance may be civilly liable in a sum of not to exceed twenty-five thousand dollars ($25,000) a day for each violation.

(b) The Agency may petition the superior court to impose, assess, and recover the sums provided for in paragraph (a). In determining the amount, the court shall take into consideration all relevant circumstances, including, but not limited to, the extent of harm caused by the violation, the economic benefit derived through any noncompliance, the nature and persistence of the violation, the length of time over which the violation occurs, and corrective action, if any, attempted or taken by the discharger.

(c) Notwithstanding any other provision of law, all civil penalties imposed by the court for any violation of this section shall be distributed to the local agency.

(d) Remedies under this section are in addition to and do not supersede or limit any and all other remedies, civil or criminal, but no liability shall be recoverable under this section for any violation for which liability is recovered under Section 6.07.

(e) Any person who violates any provision of these regulations, or of a permit or a cease and desist order issued pursuant to these regulations, is guilty of a public offense. The classification of such public offense and the punishment therefore shall be as provided by local, county, state and/or federal law.

7.07 Falsifying Information

Any person who knowingly makes any false statements, representation, record, report, plan, or other document filed with the Agency, or who falsifies, tampers with, or knowingly renders inaccurate any monitoring device or method required under these regulations, shall be punished in accordance with the Agency codes or ordinances governing such falsifications. The Agency may petition the Superior Court to impose, assess, and recover such sums as may be applicable or in accordance with Sections 7.05 and 7.06 of this ordinance.

7.08 Termination of Service

In order to effect its powers, the Agency may enter upon private property for the purpose of inspection and maintenance of sanitary and waste disposal facilities and may terminate service to property in which a violation of any rule, regulation, or this Ordinance is found to exist.
Prior to termination of service, however, the Agency Board shall notify, in writing, the owner and tenant, if any, of such property that service is intended to be so terminated and conduct a hearing thereon as herein provided. Such notice shall be mailed to the owner at the address shown on the records of the Assessor of the County, or as known to the Clerk, and a copy shall be delivered to the tenant or posted conspicuously on the property. The notice shall state the date of proposed termination of service and the reasons therefore and the date the Agency Board shall hold a hearing upon such intended termination. Such hearing shall not be held less than ten days subsequent to the giving of notice as herein required.

7.09 Emergency Suspension of Service

The Manager or designated representative may immediately suspend a User's discharge, after informal notice to the User, whenever such suspension is necessary to stop an actual or threatened discharge, which reasonably appears to present, or cause an imminent or substantial endangerment to the health or welfare of persons. The Manager may also immediately suspend a User's discharge, after notice and opportunity to respond, that threatens to interfere with the operation of the POTW, or which presents, or may present, an endangerment to the environment.

(a) Any User notified of a suspension of its discharge shall immediately stop or eliminate its contribution. In the event of a User's failure to immediately comply voluntarily with the suspension order, the Manager may take such steps as deemed necessary, including immediate severance of the sewer connection, to prevent or minimize damage to the POTW, its receiving stream, or endangerment to any individuals. The Manager may allow the User to recommence its discharge only when the User has demonstrated to the satisfaction of the Manager that the period of endangerment has passed, unless the termination proceedings in Section 7.10 of this ordinance are initiated against the User.

(b) A User that is responsible, in whole or in part, for any discharge presenting imminent endangerment shall submit a detailed written statement, describing the causes of the harmful contribution and the measures taken to prevent any future occurrence, to the Manager prior to the date of any show cause or termination hearing under sections 6.04 or 7.08 of this ordinance. Nothing in this section shall be interpreted as requiring a hearing prior to any emergency suspension under this section.

Section 8

SEVERABILITY

If any provision of these regulations or the application to any person or circumstances is held invalid, the remainder of the regulations or the application of such provisions to other persons or other circumstances shall not be affected.

Section 9

Union Sanitary District Ordinance No. 36 and all its amendments are hereby repealed.

Section 10

PUBLICATION AND MINUTE ENTRY

This Ordinance shall take effect and be in force as of September 12, 2019, and a summary of the Ordinance has been published in The Argus and Tri-City Voice, newspapers of general circulation published in the UNION SANITARY DISTRICT service area. This Ordinance shall be entered in the minutes of the District.

Passed and adopted by the Board of Directors of UNION SANITARY DISTRICT on this 12th day of August 2019, by the following vote:

AYES: Fernandez, Handley, Kite, Lathi, Toy

NOES: None

ABSENT: None

ABSTAIN: None

JENNIFER TOY
President, Board of Directors
UNION SANITARY DISTRICT

ATTEST:

PAT KITE
Secretary, Board of Directors
UNION SANITARY DISTRICT

7.10 Immediate Termination of Discharge

The manager or designated representative has the authority to immediately and effectively halt or prevent any actual or threatened discharge of pollutants to the Agency's facilities which:

- present, or may present, an imminent or substantial endangerment to the health or welfare of persons, to the environment or to the Agency's facilities;
- cause interferences with the operation of the Agency's facilities or the POTW;
- cause conditions (a) through (n) of Section 2.01.1 of this Ordinance;
- are prohibited by Section 2.01.2 of this Ordinance;
- are violations of individual wastewater discharge permit or general permit conditions;
- are a failure to accurately report the wastewater constituents and characteristics of the User's discharge;
- are a failure to report significant changes in operations or wastewater volume, constituents, and characteristics prior to discharge;
- are a result of refusal to reasonable access to the User's premises for the purpose of inspection, monitoring, or sampling.

Nothing in this section shall be interpreted as requiring a hearing prior to any emergency suspension under this section.

7.11 Nonexclusive Remedies

The remedies provided for in this ordinance are not exclusive except as specified in Section 7.06(d). The Manager may take any, all, or any combination of these actions against a noncompliant user. Enforcement of pretreatment violations will generally be in accordance with the Agency's Enforcement Response Plan. However, the Manager may take other action against any user when the circumstances warrant. Further, the Manager is empowered to take more than one enforcement action against any noncompliant user.

SUPPLEMENT

This Wastewater Discharge Regulations Supplement includes selected Code of Federal Regulations parts (listed as 40 CFR) referred to in the main section of this ordinance for convenience only. Other 40 CFR parts, which are too lengthy to include in their entirety, are summarized. More information relating to these Federal Regulation references is available in the Union Sanitary District's Environmental Compliance Division Office and the text of the regulations is available online at https://www.epa.gov/laws-regulations/regulations.

Federal Regulations are updated from time to time. This document contains current regulations as of April 2019. However, it is the responsibility of the user to ensure compliance with federal regulations, including any future amendments.

40 CFR Part 2.302(2): Definition of Effluent Data

"(i) Effluent data means, with reference to any source of discharge of any pollutant (as that term is defined in section 502(6) of the Act, 33 U.S.C. 1362 (6)):

(A) Information necessary to determine the identity, amount, frequency, concentration, temperature or other characteristics (to the extent related to water quality) of any pollutant which has been discharged by the source (or of any pollutant resulting from any discharge from the source), or any combination of the foregoing;

(B) Information necessary to determine the identity, amount, frequency, concentration, temperature or other characteristics (to the extent related to water quality) of the pollutants which, under an applicable standard or limitation, the source was authorized to discharge (including, to the extent necessary for such purpose, a description of the manner or rate of operation of the source); and

(C) A general description of the location and/or nature of the source to the extent necessary to identify the source and to distinguish it from other sources (including, to the extent necessary for such purposes, a description of the device, installation or operation constituting the source).

(ii) Notwithstanding paragraph (a)(2)(i) of this section, the following information shall be considered to be effluent data only to the extent necessary to allow EPA to disclose publicly that a source is (or is not) in compliance with an applicable standard or limitation, or to allow EPA to demonstrate the feasibility, practicability, or attainability (or lack thereof) of an existing or proposed standard or limitation:

(A) Information concerning research, or the results of research, on any product, method, device, or installation (or any component thereof) which was produced, developed, installed, and used only for research purposes; and

(B) Information concerning any product, method, device, or installation (or any component thereof) designed and intended to be marketed or used commercially but not yet so marketed or used."

40 CFR Part 136:Guidelines Establishing Test Procedures for the Analysis of Pollutants

(Summary) This part describes test procedures for performing analyses of wastewater constituents. Part 136 identifies test procedures and specifies application of and approval of alternate test procedures.

40 CFR Part 261: Environmental Protection Agency Regulations for Identification and Listing of Hazardous Waste

(Summary) This part includes criteria for identifying the characteristics of hazardous waste, as well as characteristics of hazardous waste and lists of hazardous wastes.

40 CFR Part 403.5: National Pretreatment Standards: Prohibited Discharges

(Summary) This part is commonly referred to as the General Pretreatment Regulations and includes discharge prohibitions and the requirement for development of local limits by the POTW.

403.5 National Pretreatment Standards: Prohibited Discharges

(a) (1) *General prohibitions.* A User may not introduce into a POTW any pollutant(s) which cause Pass Through or Interference. These general prohibitions and the specific prohibitions in paragraph (b) of this section apply to each User introducing pollutants into a POTW whether or not the User is subject to other National Pretreatment Standards or any national, State or local Pretreatment Requirements.

(2) *Affirmative Defenses:* A User shall have an affirmative defense in any action brought against it alleging a violation of the general prohibitions established in paragraph (a)(1) of this section and the specific prohibitions in paragraphs (b)(3), (b)(4), (b)(5), (b)(6) and (b)(7) of this section where the Users can demonstrate that:

(i) It did not know or have reason to know that its Discharge, alone or in conjunction with a discharge or discharges from other sources, would cause Pass Through or Interference; and

(ii) (A) A local limit designed to prevent Pass Through and/or Interference, as the case may be, was developed in accordance with paragraph (c) of this section for each pollutant in the User's Discharge that caused Pass Through or Interference, and the User was in compliance with each such local limit directly prior to and during the Pass Through or Interference; or

(B) If a local limit designed to prevent Pass Through and/or Interference, as the case may be, has not been developed in accordance with paragraph (c) of this section for the pollutant(s) that caused the Pass Through or Interference, the User's Discharge directly prior to and during the Pass Through or Interference did not change substantially in nature or constituents from the User's prior discharge activity when the POTW was regularly in compliance with the POTW's NPDES permit requirements and, in the case of Interference, applicable requirements-for sewage sludge use or disposal.

(b) *Specific prohibitions.* In addition, the following pollutants shall not be introduced into a POTW:

(1) Pollutants which create a fire or explosion hazard in the POTW, including, but not limited to, wastestreams with a close cup flashpoint of less than 140°F or 60°C using the test methods specified in 40 CFR 261.21.

(2) Pollutants which will cause corrosive structural damage to the POTW, but in no case Discharges with pH lower than 5.0, unless the works is specifically designed to accommodate such Discharges;

(3) Solid or viscous pollutants in amounts which will cause obstruction to the flow in the POTW resulting in Interference;

(4) Any pollutant, including oxygen demanding pollutants (BOD, COD) released in a Discharge at a flow rate and/or pollutant concentration which will cause Interference with the POTW.

(5) Heat in amounts which will inhibit biological activity in the POTW resulting in Interference, but in no case heat in such quantities that the temperature at the POTW Treatment Plant exceeds 40°C (104°F) unless the Approval Authority, upon request of the POTW, approves alternate temperature limits.

(6) Petroleum oil, nonbiodegradable cutting oil or products of mineral oil origin in amounts that will cause Interference or Pass Through;

(7) Pollutants which result in the presence of toxic gases, vapors, or fumes within the POTW in a quantity that may cause acute worker health and safety problems;

(8) Any trucked or hauled pollutants, except at discharge points designated by the POTW.

(c) *When specific limits must be developed by POTW. (1)* Each POTW developing a POTW Pretreatment Program pursuant to section 403.8 shall develop and enforce specific limits to implement the prohibitions listed in paragraphs (a)(1) and (b) of this section.

(1) Each POTW with an approved pretreatment program shall continue to develop these limits as necessary and effectively enforce such limits.

(2) All other POTW's shall, in cases where pollutants contributed by User(s) result in Interference or Pass Through, and such violation is likely to recur, develop and enforce specific effluent limits for Industrial User(s), and all other users, as appropriate, which, together with appropriate changes in the POTW Treatment Plant's facilities or operation, are necessary to ensure renewed and continued compliance with the POTW's NPDES permit or sludge use or disposal practices.

(3) Specific effluent limits shall not be developed and enforced without individual notice to persons or groups who have requested such notice and an opportunity to respond.

(4) POTWs may develop Best Management Practices (BMPs) to implement paragraphs (c)(1) and (c)(2) of this section. Such BMPs shall be considered local limits and Pretreatment Standards for the purposes of this part and section 307(d) of the Act.

(d) *Local limits.* Where specific prohibitions or limits on pollutants or pollutant parameters are developed by a POTW in accordance with paragraph (c) above, such limits shall be deemed Pretreatment Standards for the purposes of section 307(d) of the Act.

(e) *EPA enforcement actions under section 309(f) of the Clean Water Act.* If, within 30 days after notice of an Interference or Pass Through violation has been sent by EPA to the POTW, and to persons or groups who have requested such notice, the POTW fails to commence appropriate enforcement action to correct the violation, EPA may take appropriate enforcement action under the authority provided in section 309(f) of the Clean Water Act.

40 CFR Part 403.8(f)(2)(vi): Slug Control Plans

The District has the authority to evaluate whether each Significant Industrial User needs a plan to control slug discharges. For purposes of these regulations, a slug discharge is any discharge of a non-routine, episodic nature, including but not limited to an accidental spill or a non-customary batch discharge.

"If the POTW decides that a slug control plan is needed, the plan shall contain, at a minimum, the following elements:

(A) Description of discharge practices, including non-routine batch discharges;

(B) Description of stored chemicals;

(C) Procedures for immediately notifying the POTW of slug discharges, including any discharge that would violate a prohibition under 40 CFR 403.5(b), with procedures for follow-up written notification within five days;

(D) If necessary, procedures to prevent adverse impact from accidental spills, including inspection and maintenance of storage areas, handling and transfer of materials, loading and unloading operations, control of plant site run-off, worker training, building of containment structures or equipment, measures for containing toxic organic pollutants (including solvents), and/or measures and equipment for emergency response;"

40 CFR Part 403.12: Reporting Requirements for POTWs and Industrial Users

(Summary) This part contains the monitoring and reporting requirements for baseline monitoring reports and other required reports such as the periodic report of continued compliance. 40 CFR Part 403.12 is crucial to the implementation of and compliance with self-monitoring and reporting requirements. Portions of the regulations are summarized or cited below.

40 CFR Part 403.12(h): Reporting Requirements for Industrial Users Not Subject to Categorical Pretreatment Standards

At least once every 6 months, industrial users not subject to categorical Pretreatment Standards must submit a description of the nature, concentration and flow of the pollutants discharged to the POTW. These reports shall be based on sampling and analysis performed during the reporting period.

40 CFR Part 403.12 (p): Hazardous Waste Discharge Notification

(a) The user shall notify the POTW, the EPA Regional Waste Management Division Director, and State hazardous waste authorities, in writing, of any discharge into the POTW of a substance which, if otherwise disposed of, would be a hazardous waste under 40 CFR Part 261. Such notification must include the name of the hazardous waste as set forth in 40 CFR Part 261, the EPA hazardous waste number, and the type of discharge (continuous, batch, or other). If the user discharges more than one hundred (100) kilograms of such waste per calendar month to the POTW, the notification also shall contain the following information to the extent such information is known and readily available to the user: an identification of the hazardous constituents contained in the wastes, an estimation of the mass and concentration of such constituents in the waste stream discharged during that calendar month, and an estimation of the mass of constituents in the waste stream expected to be discharged during the following twelve (12) months. All notifications must take place within one hundred and eighty (180) days of the effective date of this rule. Users who commence discharging after the effective date of this rule shall provide the notification no later than 180 days after the discharge of the listed or characteristic hazardous waste. Any notification under this paragraph need be submitted only once for each hazardous waste discharged. However, notifications of changed discharges must be submitted under 40 CFR 403.12 (j) (Section 4.20 of this ordinance). The notification requirement in this section does not apply to pollutants already reported under the self-monitoring requirements of 40 CFR 403.12 (b), (d) and (e).

(b) Dischargers are exempt from the requirements of paragraph 1, above, during a calendar month in which they discharge no more than fifteen (15) kilograms of hazardous wastes, unless the wastes are acute hazardous wastes as specified in 40 CFR 261.30(d) and 261.33(e). Discharge of more than fifteen (15) kilograms of nonacute hazardous wastes in a calendar month, or of any quantity of acute hazardous wastes as specified in 40 CFR 261.30(d) and 261.33(e), requires a one-time notification. Subsequent months during which the user discharges more than such quantities of any hazardous waste do not require additional notification.

(c) In case of any new regulations under Section 3001 of RCRA identifying additional characteristics of hazardous waste or listing any additional substance as a hazardous waste, the user must notify the Agency, the EPA Regional Waste Management Waste Division Director, and State hazardous waste authorities of the discharge of such substance within ninety (90) days of the effective date of such regulations.

(d) In the case of any notification made under this section, the user shall certify that it has a program in place to reduce the volume and toxicity of hazardous wastes generated to the degree it has determined to be economically practical.

40 CFR Part 405-471: Categorical Standards and Requirements

(Summary) These parts describe the regulations applicable to categorical discharges. The following types of industries are currently subject to categorical standards:

Aluminum Forming
Asbestos Manufacturing
Battery Manufacturing
Builder's Paper
Carbon Black
Cement Manufacturing
Centralized Waste Treatment
Chemicals-Inorganic
Chemicals-Organic
Chemicals-Gum & Wood
Concentrated Animal Feeding Ops.
Coil Coating
Copper Forming
Dairy Products Processing
Electrical and Electronic Components
Electroplating
Explosives Mfg
Ferroalloy Manufacturing
Fertilizer Manufacturing
Fruit & Vegetable Processing
Glass Manufacturing
Grain Mills Manufacturing
Hospitals
Ink Formulating
Iron and Steel Manufacturing
Landfills
Leather Tanning and Finishing
Meat & Poultry Processing
Metal Finishing
Metal Molding and Casting
Metal products & Machinery
Mining – Coal
Mining – Mineral
Mining – Ore
Nonferrous Metals Forming
Nonferrous Metals Mfg
Oil & Gas Extraction
Paint Formulating
Paving and Roofing (Tars & Asphalt)
Pesticides
Petroleum Refining
Pharmaceuticals
Phosphate Manufacturing
Photographic
Plastics Molding and Forming
Porcelain Enameling
Pulp and Paper
Rubber Processing
Seafood Processing
Soaps and Detergents Mfg
Steam Electric
Sugar Processing
Timber Products Mfg
Transportation
Textile Mills
Waste Combustors

Locally Regulated Toxic Organic Pollutants

Volatiles

- [ ] Acrolein
- [ ] Acrylonitrile
- [ ] Benzene
- [ ] Bromoform
- [ ] Carbon tetrachloride
- [ ] Chlorobenzene
- [ ] Chloroethane
- [ ] 2-chloroethylvinyl ether
- [ ] Chloroform
- [ ] Dibromochloromethane
- [ ] Dichlorobromomethane
- [ ] 1,1-dichloroethane
- [ ] 1,2-dichloroethane
- [ ] 1,1-dichloroethylene
- [ ] 1,2-dichloropropane
- [ ] 1,3-dichloropropylene
- [ ] Ethylbenzene
- [ ] Methyl bromide
- [ ] Methyl chloride
- [ ] Methylene chloride
- [ ] Tetrachloroethylene (PCE)
- [ ] 1,1,2,2-tetrachloroethane
- [ ] 1,1,1-trichloroethane (TCA)
- [ ] 1,1,2-trichloroethane
- [ ] Toluene
- [ ] 1,2-trans-dichloroethylene
- [ ] Trichloroethylene (TCE)
- [ ] Vinyl chloride
- [ ]

Semi-Volatiles

- [ ] Acenaphthene
- [ ] Acenaphthylene
- [ ] Anthracene
- [ ] Benzidine
- [ ] Benzo(a)anthracene
- [ ] Benzo(a)pyrene

Semi-Volatiles (cont'd)

- [ ] Benzo(ghi)perylene
- [ ] Benzo(k)fluoranthene
- [ ] 3,4-benzofluoranthene
- [ ] Bis (2-chloroisopropyl) ether
- [ ] Bis (2-chloroethoxy) methane
- [ ] Bis (2-chloroethyl) ether
- [ ] Bis (2-ethylhexyl) phthalate
- [ ] 4-bromophenyl phenyl ether
- [ ] Butyl benzyl phthalate
- [ ] 2-chloronaphthalene
- [ ] 4-chlorophenyl phenyl ether
- [ ] Chrysene
- [ ] Dibenzo(a,h)anthracene
- [ ] 1,2-dichlorobenzene
- [ ] 1,3-dichlorobenzene
- [ ] 1,4-dichlorobenzene
- [ ] 3,3-dichlorobenzidine
- [ ] Diethyl phthalate
- [ ] Dimethyl phthalate
- [ ] Di-n-butyl phthalate
- [ ] Di-n-octyl phthalate
- [ ] 2,4-dinitrotoluene
- [ ] 2,6-dinitrotoluene
- [ ] 1,2-diphenylhydrazine
- [ ] Fluoranthene
- [ ] Fluorene
- [ ] Hexachlorobenzene
- [ ] Hexachlorobutadiene
- [ ] Hexachlorocyclopentadiene
- [ ] Hexachloroethane
- [ ] Indeno (1,2,3-cd) pyrene
- [ ] Isophorone
- [ ] N-nitrosodi-n-propylamine
- [ ] N-nitrosodimethylamine
- [ ] N-nitrosodiphenylamine
- [ ] Naphthalene

Semi-Volatiles (cont'd)

- [ ] Nitrobenzene
- [ ] Phenanthrene
- [ ] Pyrene
- [ ] 1,2,4-trichlorobenzene

ORDINANCE 34.08

UNION SANITARY DISTRICT

JULY 2019

This page left blank.

UNION SANITARY DISTRICT
ORDINANCE NUMBER 34.08

AN ORDINANCE PROVIDING FOR THE GENERAL REGULATION OF PRIVATE AND PUBLIC SEWERS, PLAN REVIEW, ISSUANCE OF CONSTRUCTION PERMITS, INSPECTION OF SEWER INSTALLATION, AND THE COLLECTION OF FEES FOR THESE SERVICES

WHEREAS, the Board of Directors of the Union Sanitary District adopted Ordinance No. 34.07 on June 22, 2015;

WHEREAS, the Board of Directors desires to adopt an amended version of Ordinance 34.07, which, among other things: (1) adds provisions regarding private main sewers and their maintenance; (2) updates fees; and (3) adds an appeals provision; and

WHEREAS, the Board of Directors hereby finds that the fees set forth in Article IX, Schedule of Fees, of this Ordinance, do not exceed the reasonable cost of providing the service, product, benefit, privilege or activity for which the fee is charged.

NOW, THEREFORE, The Board of Directors of the Union Sanitary District does hereby ordain as follows:

ARTICLE I
DEFINITIONS

SECTION 1 TERMINOLOGY

Words, phrases, or terms not specifically defined herein, and having a technical or specialized meaning shall be defined as set forth in the latest editions of the Uniform Plumbing Code.

SECTION 2 SPECIFIC DEFINITIONS

Unless the context indicates otherwise, the following words and terms shall have the meaning set forth in this article:

a) BACKFLOW PREVENTION DEVICE

A device installed in the building sewer for the purpose of preventing or minimizing the possibility of raw sewage backing up into the building.

b) BUILDING DRAIN

That part of the lowest piping of a drainage system which conveys wastewater from inside the walls of a building to a connection point with the building sewer.

c) BUILDING SEWER

A sewer conveying wastewater from a point 30 inches or less from the building or structure to a main sewer. The building sewer includes that portion on the property and that portion from the property line or easement line to the sewer main (Lateral Sewer). Building Sewers also include Private Sewers and House Sewers as defined.

d) DEVELOPER

A person or party submitting a request for connection to the District.

e) DISTRICT

Union Sanitary District, Alameda County, California.

f) DISTRICT ENGINEER or ENGINEER

The General Manager of the District, or his designees, including, but not limited to, duly authorized personnel.

g) HOUSE SEWER

That part of a piping system which conveys wastewater from a point 30 inches or less outside of a single family dwelling or residential unit to a main sewer. The house sewer includes that portion on the property and that portion from the property line or easement line to the sewer main (Lateral Sewer).

h) LATERAL SEWER

That portion of the building sewer from the sewer main to the property line of the parcel of which the sewer serves (sometimes referred to as the lower lateral).

i) MAIN SEWER ("main")

Any existing or proposed sewer dedicated to public use within the public right-of-way or sanitary sewer easement.

j) PERMIT

A document issued by the DISTRICT that allows the construction,

replacement, modification, or repair of main, building, private, and house sewers.

k) PERMIT HOLDER

That person or company performing the sanitary sewer work to which a permit is issued.

l) PRIVATE SEWER

That part of a piping system serving a non-residential building which conveys wastewater from a point 30 inches or less outside of a building to a main sewer. Excluded from this definition is a house sewer as defined in "e)" above.

m) PRIVATE MAIN SEWER

Any existing or proposed sewer within a private street and owned by maintained by a private party.

n) PUBLIC NUISANCE

Discharge of wastewater in any manner in violation of the regulations of the District's latest Wastewater Discharge Ordinance (Series 36) or of any order issued by the District Engineer as authorized by those regulations, is considered a public nuisance.

o) SEPTIC TANK

A water-tight receptacle which receives the discharge of a sanitary drainage system, or part thereof, designed and constructed so as to retain solids, digest organic matter through a period of detention, and allow the liquids to discharge into the soil outside of the tank through an effluent disposal system, meeting the requirements of the local Health Department having jurisdiction over such installation.

ARTICLE II
GENERAL REGULATIONS

SECTION 1 STANDARD SPECIFICATIONS

Main sewers, building sewers, and appurtenances shall be constructed, repaired, or altered in accordance with the latest revision of the District's Standard Specifications as adopted by the District's Board or the latest revision of the Uniform Plumbing Code. In all cases the District's Standard Specifications shall take precedence.

SECTION 2 PRIVATE SEWAGE SYSTEMS

The design, construction and maintenance of private sewage disposal systems, septic tank systems or any other method of sewage disposal other than through the system of the District are governed by the ordinances, codes, rules and regulations of the cities within the District, the County, or the State of California.

SECTION 3 REPAIR WORK ON MAIN SEWERS

If a person or company damages a main sewer or appurtenances within the District, the District may proceed to make the necessary repairs and the party responsible for the damages shall compensate the District for the cost thereof. If, in the opinion of the District Engineer, the repair work cannot be done by District forces, the District shall have the right to hire an outside contractor. In the event an outside contractor is hired, the party responsible for the damage shall compensate the District for all costs related to the repair.

SECTION 4 OWNERSHIP AND MAINTENANCE OF MAIN SEWERS

The District shall accept and maintain main sewers in the public right-of-way pursuant to this Section 4. If a main sewer is constructed in a private street or driveway, depending on site conditions, overall relationship to the District's system and conformance with District standards and specifications, the District may accept a sanitary sewer easement for the property in which the main sewer is constructed or may require the property owner or project developer or homeowner's association to own and maintain the sewer as a private main sewer. Whenever a main sewer in a public right-of-way or sanitary sewer easement has been constructed to the satisfaction of the District and accepted by the District, the District shall maintain the main sewer. Private main sewers not accepted by the District shall be maintained by the fee owner of the property in which the main sewer has been constructed or the project developer or homeowner's association, as may be approved by the District, in accordance with the terms of a maintenance agreement in a form approved by the District.

SECTION 5 OWNERSHIP AND MAINTENANCE OF BUILDING SEWERS

The building sewer serving a property is owned by the property owner. The property owner shall be responsible for the construction, maintenance, repair, or replacement of the building sewer, including the lateral sewer. The property owner shall also be

responsible for complying with District's Wastewater Discharge Ordinance (Series 36) for the proper discharge of wastewater to the sewer. Property owners shall maintain their building sewer in a manner that prevents sanitary sewer overflows and sewer spills. If a building sewer is found not to be properly maintained, this condition shall be declared a public nuisance and the abatement of said nuisance shall be as set forth in the District's Wastewater Discharge Ordinance (Series 36). The District will not be liable for damage resulting from sewer overflows as a result of inadequate maintenance of the building sewer.

SECTION 6 BACKFLOW PREVENTION DEVICES

A backflow prevention device shall be required in the following cases:

- When the elevation of the lowest floor in any building is less than twelve inches above the rim elevation of the nearest upstream manhole or junction structure of a District Main Sewer into which a Building Sewer connects.
- On all structures where a pump is used to lift sewage to the sanitary sewer lateral and main sewer. In this case, the backflow relief device shall be located to protect the structure from damage in the event the pump is pumping against a closed backflow prevention device.
- On buildings where the elevation of any floor is at or below the invert of the sanitary sewer main, or where a condition exists where a plug in the sanitary sewer main will cause the hydraulic grade line to rise above the lowest floor level.

The installation of any such backflow protective device shall be at the sole cost and expense of the property owner. If the District, as a courtesy, installs the device, the District shall be under no obligation to ascertain that the backflow protective device continues in operating condition. The maintenance, repair, or replacement of the backflow protective device shall be the sole obligation of the owner.

Any property owner whose property has no backflow prevention device, or which has a defective or improperly installed backflow prevention device, or which has a backflow prevention device that does not comply in all respects with the requirements of this Ordinance or with the District's Standard Specifications shall be responsible for all damage that results from the lack of such a device, or the failure of the defective or improperly installed or noncompliant device to prevent or minimize such damage. The District will not be liable for damage resulting from sewer overflows when a backflow prevention device has not been installed or is not operating properly.

SECTION 7 CONNECTION OF BUILDING DRAINS

Every building in which plumbing fixtures are installed shall be separately and independently connected to a main sewer, private main sewer, or septic tank. Where there is more than one building on a lot and where the lot cannot be subdivided under the provisions of any local regulations, a separate sewer will not be required. Connection of each building on a lot to the separate sewer requires a District permit, inspection by the District and is subject to a separate capacity fee (Ordinance 35 Series) and separate sewer service charges (Ordinance 31 Series). Any building sewers that

have not been permitted, inspected; or where capacity and/or current sewer service charges have not been paid, will be subject to disconnection by District forces under the authority of Health and Safety Code Sections 6520.1 and 6520.2. Upon written notice from the District, the owner or occupant of any building having a building sewer that is not permitted in accordance with this ordinance shall terminate the connection of such building sewer to the main sewer within ten (10) days from the mailing of such notice. District forces are hereby authorized to enter any such property, cap or terminate any building sewer line and to charge the owner and/or occupant of all such buildings which are required to be disconnected from the sewer system, the reasonable cost of such effort. Entry on private property and termination of service is authorized by Health & Safety Code Section 6523.2.

SECTION 8 SEPTIC TANKS

Where there is no available main sewer within 200 feet measured along streets, alleys, avenue, or public rights-of-way upon which a lot abuts, the building sewer may be connected with septic tanks when permitted by the county health department having jurisdiction over such installation, and provided further that whenever a main sewer is extended within the 200 foot limit as described above, then the aforesaid septic tank must be abandoned when directed by the county health department and the building sewer connected to the main sewer. All costs for abandoning the septic tank and appurtenances and connection to the main sewer shall be the sole responsibility of the property owner.

SECTION 9 PAYMENT OF FEES BEFORE CONNECTION

Until all fees and deposits, including costs of repair work on main sewers are paid or appropriate arrangements for payment have been agreed upon, no connection to District main sewers is allowed.

ARTICLE III
PROHIBITED DISCHARGES TO THE SEWERS

SECTION 1 PROHIBITIVE DISCHARGES

District Ordinance No. 36 Section 2.01 identifies those discharges to the sanitary sewer system that are prohibited. No person shall discharge or cause to be discharged, any of the following into a building sewer, private main sewer, or main sewer:

- Any flammable or explosive substance, including gasoline, paint, oils or other flammable or explosive substance
- Any toxic or hazardous substance that may cause a threat to the life or health of the public or sewer maintenance person, or to the environment.
- Any substance that would cause an obstruction of flow in the sanitary sewer
- Any radio-active substance
- Any pesticide or herbicide
- Any medical wastes, including prescription or non-prescription pharmaceuticals or medicines

Any discharge or threat of a prohibitive discharge may be cause for the District to terminate service to prevent the harmful discharge to the District's sewer system.

In addition, storm water, groundwater, rain water (including from rain gutters), street drainage, subsurface drainage or yard drainage shall not be discharged through direct or indirect connections to the sewer unless a permit is issued for such connection by the District.

See additional prohibitions under District Ordinance No. 36.

ARTICLE IV
PLAN REVIEW

SECTION 1 PLAN SUBMITTALS

All plans to be submitted for review must be prepared by a California Registered Civil Engineer and shall be in such form as required by the District Engineer.

SECTION 2 PLAN REVIEW PERIOD

If, during or after a plan review no action has taken place within a period of six months, the review of the plans shall become void. If a plan is approved and a permit is not issued within one year of the plan approval date, the approval shall become void. Void plans must be resubmitted along with a plan review fee in the amount in effect at the time of resubmittal before plans will be re-reviewed. Plans that are void and resubmitted which are substantially the same as those originally approved shall be charged for one additional review *or 30% of the total plan* check fee.

SECTION 3 MINIMUM STANDARDS

Plans submitted for review or approval which, in the opinion of the District Engineer, do not meet minimum plan preparation and/or design standards, will not be reviewed and shall be returned to the applicant.

ARTICLE V
PERMITS

SECTION 1 PERMITS REQUIRED

A person or company engaging in any of the following activities shall obtain a permit from the District :

a) Construction of a main sewer.
b) Construction, replacement, alteration or repair of a building sewer.
c) Connection of a building drain to a building sewer.
d) Connection of a wash pad, RV dump station or other appurtenances to the building sewer.

SECTION 2 PERMIT APPLICATION

Applications for permits shall be made by submitting the necessary plans and information such as building and encroachment permits, CC & R's (Covenants, Conditions and Restrictions), easement documents, etc. as required by the District Engineer.

SECTION 3 ISSUANCE OF PERMITS

Permits shall be issued to the party actually doing the work, after all necessary documents and/or plans are approved and all fees and deposits are paid. Permit issuance by the District does not guarantee the permit holder the right to perform the work. Additional authorization or permits may also be required (ex. city street encroachment permit).

SECTION 4 EFFECTIVE PERIOD OF PERMIT

A permit is in effect for a period of one year from the date it was issued. The District Engineer may, for good cause shown, extend any permit beyond the initial one year period described above provided that:

a) The specific activities permitted by the extension are substantially the same as the activities permitted by the original permit; and that the permit holder has made reasonable progress in performing the permitted activities.
b) The applicant pays all applicable fees and charges existing as of the date that the extension is granted. A credit shall be given for fees and charges paid under the original permit, to the extent they have not been previously expended by the District or any other governmental agencies or they represent payment for work not yet done by the District or any other governmental agency in administering the permit process.

SECTION 5 TRANSFERABILITY OF PERMITS

A permit is not transferable.

SECTION 6 FAILURE TO OBTAIN A REQUIRED PERMIT

Whenever a person or company is required to obtain a permit as provided in this article and fails to obtain the required permit and inspection, there shall be paid to the District, in addition to all other charges, an amount as stated in Article IX Schedule of Fees. This fee may be withheld from other deposits the person or company may have on file with the District or will be charged and paid for prior to the issuance of future permits. Failure to obtain a permit and pay the required fees will prevent that person or company from being issued a permit to perform sanitary sewer work for future projects within the District.

SECTION 7 LICENSING

If a permit is to be issued to a contractor, that contractor shall be properly licensed by the STATE OF CALIFORNIA. The Contractor shall submit proof of licensing upon request by the District.

ARTICLE VI
INSPECTION

SECTION 1 INSPECTION REQUIRED

The District shall inspect the work done under each permit. If the work does not meet District standards and requirements, the District may deny connection, order disconnection, or require other corrective measures at the expense of the permit holder.

SECTION 2 SEWER WORK COVERED WITHOUT APPROVAL

Work that has been covered without approval by the District shall be uncovered by the permit holder for inspection.

SECTION 3 REQUEST FOR INSPECTIONS

The permit holder shall request a District inspection by giving at least 48 hours notice during normal working hours in advance of the time inspection is requested. Inspections outside of normal working hours shall require that the permit holder file and obtain approval on applicable forms and pay for any inspections at the overtime rate. If, in the opinion of the Engineer, work will be done by a Contractor outside of normal working hours, the Engineer has the right to inspect the work and charge the permit holder at the overtime rate. Any permit holder requesting inspection on a normal day off shall be charged for a minimum inspection time of four hours. Whenever work under a permit has been accepted by the District, the permit holder will be notified within 15 days of the date of acceptance.

SECTION 4 LIABILITY

The function of the Union Sanitary District is to assure that sewer facilities constructed on the property of others are compatible with the District's then current Standards and Specifications. Unless determined to be the direct result of active negligence of the District, any injuries to persons and/or property during or after construction are the responsibility of the developer, owner or contractor and not Union Sanitary District. In consideration of issuance of a permit, the developer, owner and/or contractor seeking such permit shall hold Union Sanitary District harmless from any and all liability, and shall agree to defend and indemnify Union Sanitary District regarding any injury or damage, actual or alleged, to persons and/or property, resulting from the improvements constructed pursuant to the permit or permits issued by the District in conjunction herewith.

SECTION 5 HOUSE SEWER INSPECTION

Inspection for the repair or replacement of a house sewer shall be limited to three on-site inspections: 1) a pre-job consultation intended to assist the homeowner/contractor in the inspection process and advise of the District's construction requirements, 2) an

inspection of the installed sewer subject to testing and prior to backfill, and 3) a final site inspection. The pre-job inspection can be substituted for re-testing of the test inspection or final inspection. Each inspection in excess of the three (3) indentified above may be charged $50 for each additional inspection, which will be deducted from the Permit Holder Deposit at the close of the project.

ARTICLE VII
FEES

SECTION 1 DOCUMENT REVIEW FEE

Whenever a document such as an easement or an encroachment permit is submitted for review, a document review fee may be required to be paid prior to any review. This amount shall be in accordance with Article IX Schedule of Fees, of this ordinance.

SECTION 2 STUDY FEE

Whenever a proposed development may have a significant effect on the capacity of the sewer system and/or treatment plant, the District may require a special engineering study to be undertaken. In such an event, a fee will be charged for the estimated cost of the study, including District administration and engineering costs. Upon completion of the study, additional fees may be charged based on actual costs of the study.

SECTION 3 PLAN REVIEW FEE

After the first plan review is completed, a plan review fee will be calculated in accordance with Article IX, entitled "Schedule of Fees", of this ordinance. The plan review fee will be invoiced and shall be paid prior to the return of the reviewed plans. This fee covers two preliminary reviews and final construction approval/signature. An additional fee may be charged before the third preliminary and subsequent reviews. The plan review fee may be adjusted upward at the time of plan approval to reflect changes from the first submittal.

SECTION 4 INSPECTION FEE

Prior to the issuing of a construction permit, an inspection fee, per Article IX Schedule of Fees, shall be paid. This fee shall cover the cost of three inspections. Further inspections may be provided at no cost unless they result from the permit holder failing to do the required work, in which case additional inspection fees shall be charged to the permit holder's deposit.

SECTION 5 PERMIT FEE

At the time a permit is issued, a permit fee in accordance with Article IX Schedule of Fees shall be paid. This fee shall cover the cost of processing the permit.

SECTION 6 MATERIAL AND SERVICES FEE

A material and services fee shall be charged per Article IX Schedule of Fees for any work to be done by District forces. This fee shall be paid prior to issuing a construction permit and shall cover the cost of District forces doing work as needed for the proposed construction.

ARTICLE VIII
INSURANCE AND CASH DEPOSITS

SECTION 1 INSURANCE REQUIRED

A contractor who applies for a permit shall maintain, on file with USD, an insurance certificate evidencing the following insurances:

a) Worker's Compensation
b) Commercial General Liability ($1,000,000/incident minimum and $2,000,000 aggregate)

USD shall be named as an Additional Insured under the required policies (Additional Endorsement needed).

SECTION 2 PURPOSE OF CASH DEPOSIT FOR SEWER CONSTRUCTION PERMITS

The District finds that the work of constructing, installing and repairing of sewers vitally affects the operation of the District's sewer system and has an adverse and deleterious effect upon it unless the work is inspected by the District and installed per District standards. The reason for requiring a cash deposit from an applicant as provided in this section is to ensure that the District's construction standards are met. As provided in this Article, deposits may be used to complete unfinished work or to pay for work that is performed by the District to ensure District's standards are met.

SECTION 3 DEPOSIT FOR MAIN SEWER CONSTRUCTION

A cash deposit in an amount established by Article IX Schedule of Fees, shall be submitted to the District for main sewers prior to the issuance of a permit for the construction, installation, or alteration of a main sewer. The remaining amount of any cash deposit will be refunded after one year from the date of acceptance. However, no additional cash deposit is required where the municipality within which the work is to be performed requires the filing of a faithful performance bond guaranteeing correction of defects due to faulty, improper, or inferior workmanship or materials arising or discovered within one year after acceptance of the work.

SECTION 4 DEPOSIT FOR PRIVATE SEWER AND PRIVATE MAIN SEWER CONSTRUCTION

An applicant for a permit, and a developer for the construction, installation or alteration of a private sewer or private main sewer shall deposit with the District, the amount established in Article IX Schedule of Fees. Any remaining amount of the deposit shall be refunded within 60 days after acceptance of the project by the District.

SECTION 5 DEPOSIT FOR BUILDING SEWER REPAIR, ALTERATION, OR INSTALLATION

An applicant for a permit to repair, alter, or install a building sewer(s) shall deposit with the District, the amount established in Article IX Schedule of Fees. Any remaining amount of the deposit shall be refunded within 60 days after acceptance of the sewer by the District, or if the Deposit is for a tract of houses, within 60 days after the last house is accepted.

SECTION 6 FAILURE OF A PERMIT HOLDER TO CORRECT WORK

A permit holder shall have ten days to correct any work, or respond in writing, after the District gives notice to correct deficient work. If the District Engineer, upon review of the written response, finds that there is insufficient reason for the permit holder not to correct the deficient work, the permit holder shall have five days to correct the work. Failure to correct the deficient work in accordance with the schedule above will result in forfeiture of the deposit to the District. The District may then take corrective action as it determines necessary to complete the work and deduct any amounts expended from the deposit.

SECTION 7 FAILURE TO CORRECT THE WORK AND THE WORK CONSTITUTES A DANGER

If a permit holder fails to correct any work within five days after notification in writing, and in the opinion of the District Engineer the work constitutes a danger to the public or District facilities, or that the District forces cannot correct the work, the work shall be disconnected by District forces. The cost of this disconnection shall be deducted from any deposit.

SECTION 8 INCREASE IN DEPOSIT OR SUSPENSION FROM WORK IN THE DISTRICT

If a permit holder fails to correct the work on two permits within a one-year period, the required deposit for future permits may be doubled. Further failures to correct the work may result in additional increases or disallowance of the permit holder to obtain another permit within the District's boundaries.

ARTICLE IX
SCHEDULE OF FEES

SECTION 1 **DOCUMENT REVIEW FEE**

a) Easements, Deeds and Quitclaims $500.00
b) Encroachment permits $ 50.00
c) Special Agreements/Studies Development/Review Cost (including consulting and legal fees; $500 minimum)

SECTION 2 **PERMIT FEE**

Permit fees will be charged at $50.00 each.

SECTION 3 **PLAN REVIEW FEE**

a) Two preliminary and one final review
   1. 2.5% of construction costs **or**
   2. $100.00 minimum
b) Additional reviews charged at 30% of initial plan check fee.

SECTION 4 **INSPECTION FEE**

a) 4.0% of construction costs **or**
b) Main Sewers: $200.00 minimum
c) Private or house sewers:
   1. Main to Property Line: $150.00 minimum/connection
   2. Property Line to building or house: $150.00 minimum/connection

SECTION 5 **SCHEDULE OF CONSTRUCTION COSTS** (used for calculating plan review and inspection fees, and, permit holder and developer deposits).

Item	Unit	Cost
Manhole (Type II)	Each	$5,600.00
Manhole (public or private)	Each	$3,500.00
Drop Manhole (connection)	Each	$1,000.00
Risers	Each	$800.00
Grease Interceptor/Clarifier 1500 Gallons	Each	$4,300.00
Grease Interceptor/Clarifier 2000 Gallons	Each	$4,900.00
Grease Interceptor/Clarifier 3000 Gallons	Each	$5,300.00

Grease Interceptor/Clarifier 5000 Gallons	Each	$6,900.00
Sand-Oil Water Separator	Each	$2,150.00
Trash Enclosure Interceptor	Each	$2,150.00
Cleanout to Grade	Each	$375.00
12 inch Sewer	Linear Feet	$120.00
10 inch Sewer	Linear Feet	$100.00
8 inch Sewer	Linear Feet	$80.00
6 inch Sewer	Linear Feet	$60.00
4 inch Sewer	Linear Feet	$40.00
Sewer in Easement (additional charge)	Linear Feet	$10.00
Sewer in Steel Casing	Linear Feet	$1,560.00
30 inch Steel Casing	Linear Feet	$700.00
Commercial/Multi-Family Pump Station	Each	$16,000.00
Residential Pump Station	Each	$8,000.00
Abandon Sewer	Linear Feet	$11.00
Abandon Manhole	Each	$900.00

NOTE: The cost of items not listed will be estimated by the District Engineer.

SECTION 6 **MATERIAL AND SERVICES FEE** (used for calculating fees associated with work performed by District Forces).

	Description of Work	Unit	Fee
a)	Install stub and channel manhole (Work inside manhole only)		
	1. New pipe stub into an existing 8" sewer or larger manhole base	Each	$3,300
	2. New pipe stub into an existing 12" sewer or larger manhole base	Each	$4,235
	3. New pipe stub into an existing 18" sewer or larger manhole base	Each	$14,500
b)	Channel new manhole		
	1. 6" to 10" main	Each	$3,160
	2. 12" to 18" main	Each	$3,500
	3. 21" or larger main	Each	$7,225
c)	False Bottom		
	1. Install and remove	Each	$495
d)	Adjust manhole to grade		
	1a. Structural adjustment with reference points, false bottoms, and asphalt concrete	Each	$1,760
	1b. In addition to 1a. above, for additional	Each	$7,600

	work including: excavation; removal; and replacement and/or installation of cone and/or barrel section		
	2. Asphalt concrete overlay using riser rings up to 3" in height, including reference points	Each	$575
e)	Pipe repairs less than 10 feet in length (cut & repair only)		
	1. 4" and 6" lateral	Each	$625
	2. 6" and 8" main	Each	$730
	3. 10" and 12" main	Each	$975
f)	Wye or tee splices (cut and install only)		
	1. 6" to 12"	Each	$1,535

	Description of Work	Unit	Fee
g)	*Television inspection		
	1. Laterals	Each	$525
	2. Mains, in excess of 1000 ft in length (if < 1000 ft, then cost is on a time -and-materials basis)		
	$0.80 Cleaning +$1.24 TV	Per Ft.	$2.04
	• TV only	Per Ft.	$1.24
	*If laterals need additional work prior to TV, such as, snaking, repairs, or installing a cleanout, additional costs will be charged on a time-and-material basis		
h)	Cleanouts		
	1. Install	Each	$915
	2. Raise cleanout to grade and install cleanout box	Each	$395
i)	Miscellaneous		
	1. Install and remove temporary plug	Each	$645
	2. Catch debris	Each	$630
	3. Dye tracing	Each	$265
	4. Ferret tracing	Each	$265
j)	Overtime inspection		
	1. Hourly Rate (four hour minimum for weekends and holidays)	Per Hour	$355
k)	Unforeseen conditions may increase the time and charges to complete work.		
l)	Additional work will be charged based on a time–and-material basis.		
m)	Contractors will be required to sign a work order agreeing to pay for work in advance of USD performing the work.		
n)	USD work guaranteed for 12 months.		

SECTION 7 PERMIT HOLDER DEPOSITS

a)	Main Sewers	50% of Construction Costs
b)	Private Sewers	1. $2,500.00 per permit, **or** 2. $5,000.00 by cash, check or Credit Card payable to Union Sanitary District
c)	House Sewers (Repair, alteration, or installation)	1. $500.00 per permit, **or** 2. $5,000.00 cash, check or Credit Card payable to Union Sanitary District for multiple permits in lieu of the per permit permitholder deposit.

SECTION 8 DEVELOPER DEPOSITS

Developer deposit is 10% of Construction Cost of any structure, or $800.00, whichever is greater.

SECTION 9 FEE FOR FAILING TO OBTAIN A PERMIT

The fee for failing to obtain a permit is a minimum of $150.00 or 50% of the Inspection Fee, whichever is greater.

ARTICLE X
APPEALS AND ADJUSTMENTS

SECTION 1 APPEAL

Any user, permit applicant, or permit holder affected by any decision, action, or determination made by the District Engineer or another employee of the District in interpreting or implementing the provisions of this ordinance or in any permit issued herein, may file with the District Engineer a written appeal or request for reconsideration, as applicable, within ten days of such decision, action, or determination, setting forth in detail the facts supporting the user's appeal or request for reconsideration.

If the ruling made by the District Engineer is unsatisfactory to the person appealing or requesting reconsideration, he or she may file a written appeal to the District's governing body within ten days after notification of District action. The written appeal shall be heard by the governing body within 30 days from the date of filing or as soon thereafter as reasonably possible. The District's governing body shall make a final ruling on the appeal within 30 days of the meeting. The District Engineer's decision, action, or determination shall remain in effect during such period of appeal. The determination of an appeal by the governing body of the District shall constitute a final determination of the District and may be subject to judicial review.

ARTICLE XI
REPEAL

Ordinance 34.07 is hereby repealed.

ARTICLE XII
EFFECTIVE DATE

This Ordinance shall take effect and be in force August 12, 2019 and at least one week prior to said date it shall be published once in THE TRI-CITY VOICE and THE ARGUS, newspapers of general circulation published in the UNION SANITARY DISTRICT. This ordinance shall be entered in the minutes of the District.

ARTICLE XIII
SEVERABILITY

If any provision of this Ordinance or any subdivision thereof, or any application thereof, to any person or circumstance is held invalid, the remainder of this Ordinance or the subdivision, or the application of such provision to other persons or circumstances shall not be affected thereby.

On motion duly made and seconded, this Ordinance was adopted after public hearing by

the following vote on July 22, 2019:

AYES: Fernandez, Hanley, Kite, Lathi, Toy

NOES: None

ABSTAIN: None

ABSENT: None

Anjali Lathi
President, Board of Directors
UNION SANITARY DISTRICT

ATTEST

Jennifer Toy
Secretary, Board of Directors
UNION SANITARY DISTRICT

STANDARD SPECIFICATIONS AND DETAILS

UNION SANITARY DISTRICT
2017

Union Sanitary District Service Area Location Map

UNION SANITARY DISTRICT

(THIS PAGE LEFT BLANK INTENTIONALLY)

STANDARD SPECIFICATIONS AND DETAILS
Table of Contents

SECTION 1 - INTRODUCTION 1
1.01 INTRODUCTION 1
SECTION 2 - DEFINITIONS AND TERMS 2
2.01 DEFINITIONS AND TERMS 2
2.02 ABBREVIATIONS 3
2.03 PIPE TYPES 4
SECTION 3 - SCOPE OF WORK 5
3.01 SCOPE 5
3.02 GUARANTEE OF WORK 5
3.03 INDEMNIFICATION 5
3.04 SAFETY 5
SECTION 4 - SITE PREPARATION 6
4.01 SITE PREPARATION 6
4.02 ACCEPTANCE OF GROUNDWATER FROM CLEANUP PROJECTS 6
SECTION 5 - SEWER PIPE LINES 7
5.01 SEWER CONSTRUCTION MATERIALS 7
5.02 PIPE MATERIALS 7
5.03 PIPE COUPLINGS 11
5.04 SADDLE 11
5.05 EMBEDMENT 11
5.06 STAINLESS STEEL BANDS 11
SECTION 6 - PORTLAND CEMENT CONCRETE AND MORTAR 12
6.01 CONCRETE 12
6.02 MORTAR AND GROUT 12
SECTION 7 - SEWER PIPE AND STRUCTURE INSTALLATION 14
7.01 SEWER PIPE LAYING 14
7.02 SPLICE 16
7.03 MANHOLE 17
7.04 RISER (MAIN SEWER ONLY) 19
7.05 CLEANOUT TO GRADE (BUILDING SEWER ONLY) 20
7.06 TWO-WAY CLEANOUT TO GRADE (BUILDING SEWER ONLY) 20
7.07 TEST WYE (BUILDING SEWER ONLY) 20
7.08 SEWER THROUGH CASING 20
7.09 REHABILITATION OF BUILDING SEWERS USING PIPE-BURSTING 21

SECTION 8 - EXCAVATION 24
8.01 DEFINITION 24
8.02 OPEN TRENCHING 24
SECTION 9 - TRENCH BACKFILLING 27
9.01 TRENCH BACKFILLING 27
9.02 PIPE FOUNDATION - (IF REQUIRED BY ENGINEER) 27
9.03 GEOTEXTILE FILTER FABRIC 27
9.04 PIPE EMBEDMENT 28
9.05 TRENCH BACKFILL MATERIAL 30
SECTION 10 - PAVING REPLACEMENT 32
10.01 DEFINITION 32
10.02 PAVING IN PUBLIC RIGHTS-OF-WAY OR PUBLIC UTILITY EASEMENT 32
10.03 PAVING IN UNION SANITARY DISTRICT EASEMENTS AND IN PRIVATE PROPERTY 32
SECTION 11 - MISCELLANEOUS REQUIREMENTS 33
11.01 INSPECTION 33
11.02 ALTERATIONS 33
11.03 DEFECTIVE WORK AND/OR MATERIALS 33
11.04 MANHOLE PROTECTION 33
11.05 USE OF EXISTING BUILDING SEWERS 33
11.06 BUILDING SEWER MARKING 34
11.07 MANHOLE MARKING 34
11.08 REPAIR OF DAMAGED SEWERS AND OTHER UTILITIES 34
11.09 CONNECTION OR ADJUSTMENTS TO EXISTING MAIN SEWERS OR APPURTENANCES 35
11.10 ABANDONMENTS 35
SECTION 12 - TESTING 37
12.01 TESTING MAIN SEWERS 37
12.02 TESTING BUILDING SEWERS 39
12.03 TESTING PRESSURE SEWERS 40
12.04 MANHOLE VACUUM TESTING 40
SECTION 13 - TELEVISION INSPECTION 42
13.01 INSPECTION OF MAIN SEWERS 42
13.02 WHEN TESTED 42
SECTION 14 - CLEANING 43
14.01 CLEANING 43
14.02 DISCHARGE OF CLEANING WATER 43
SECTION 15 - SITE CLEANUP AND RESTORATION 44
15.01 SITE CLEANUP AND RESTORATION 44

SECTION 16 - REQUIREMENTS FOR ISSUANCE OF SEWER CONSTRUCTION PERMITS 45
16.01 PROPERTY TO BE SERVED BY USD 45
16.02 INSURANCE REQUIREMENTS 45
16.03 LICENSE REQUIREMENTS 45
16.04 BOND/DEPOSIT REQUIREMENTS 45
16.05 FEES AND CHARGES 46
16.06 SUBMISSION OF DATA FOR MAIN SEWERS 47
16.07 SUBMISSION OF DATA FOR BUILDING SEWERS 48
16.08 ENCROACHMENT AGREEMENT 50
16.09 MINIMUM REQUIREMENTS FOR DIGITAL SUBMITTAL 50

SECTION 17 - GREASE AND OIL COLLECTION SYSTEMS AND ADDITIONAL CONNECTION REQUIREMENTS 54
17.01 GENERAL 54
17.02 GREASE INTERCEPTORS 54
17.03 GREASE TRAPS 54
17.04 CONNECTIONS 54
17.05 DISHWASHERS 54
17.06 GARBAGE DISPOSALS 55
17.07 CAR WASH AND INDUSTRIAL VEHICLE CLEANING FACILITIES 55
17.08 TRASH ENCLOSURES 55
17.09 TRASH COMPACTORS 55
17.10 PARKING STRUCTURES AND LOTS: 55
17.11 VEHICLE EQUIPMENT REPAIR AND MAINTENANCE SHOPS 55
17.12 FUELING STATIONS (RETAIL, WHOLESALE AND PRIVATE) 55
17.13 TRENCH DRAINS: 55
17.14 SWIMMING POOLS, SPAS AND FOUNTAINS 56
17.15 OUTSIDE UTILITY EQUIPMENT AREAS 56
17.16 ELEVATOR AND ESCALATOR SUMPS 56
17.17 CLAY, CERAMIC, GRANITE, MARBLE, GLASS GRINDING AND STONE CUTTING FACILITIES 56

SECTION 18 - MISCELLANEOUS MAIN SEWER AND BUILDING SEWER REQUIREMENTS 57
18.01 REPAIR OR RELOCATION OF EXISTING MAIN SEWER OR APPURTENANCES 57
18.02 CONNECTION OR ADJUSTMENTS TO EXISTING MAIN SEWERS OR APPURTENANCES 57
18.03 REPAIR, RELOCATION OF OR CONNECTION TO EXISTING BUILDING SEWERS 58
18.04 USE OF EXISTING BUILDING SEWERS 58
18.05 ABANDONMENTS 58
18.06 NUMBER OF BUILDING SEWERS REQUIRED 58

SECTION 19 - REQUIREMENTS PRIOR TO START OF CONSTRUCTION 59
19.01 PERMIT 59
19.02 STAKING AND CUT SHEETS 59
19.03 INSPECTION 60
SECTION 20 - APPROVAL AND ACCEPTANCE OF CONSTRUCTION 61
20.01 MAIN SEWERS 61
20.02 BUILDING SEWERS 61
20.03 PAYMENT 61
SECTION 21 - SPECIFICATIONS AND DETAILS 62
21.01 MATERIALS AND METHODS OF CONSTRUCTION 62
21.02 CONSTRUCTION DETAILS 62
SECTION 22 - DESIGN AND POLICY STANDARDS FOR MAIN SEWERS 63
22.01 PIPE MATERIALS 63
22.02 PIPE MATERIAL CHANGES 63
22.03 SIZE AND SLOPE 63
22.04 ALIGNMENT 63
22.05 CROSS CONNECTION 63
22.06 GRADE 63
22.07 GRADE STAKES 63
22.08 DESIGN DEPTH 64
22.09 MINIMUM PIPE COVER 64
22.10 TRENCH INTERSECTIONS 64
22.11 HORIZONTAL UTILITY CLEARANCE 64
22.12 CROSSING STORM DRAINS 64
22.13 CROSSING WATER MAINS 64
22.14 STRUCTURE LOCATIONS 65
22.15 MAIN LOCATIONS 65
22.16 INVERT ELEVATIONS AT MANHOLES 65
22.17 MAXIMUM DEFLECTION AT MANHOLES 65
22.18 BUILDING SEWER CONNECTION AT MANHOLES 65
22.19 MANHOLE RIM ELEVATION 65
22.20 CONNECTION TO EXISTING MANHOLE 65
22.21 CONNECTIONS BETWEEN MAIN SEWERS 66
22.22 DROP MANHOLES 66
22.23 BOLT-DOWN MANHOLES 66
22.24 EASEMENT WIDTH REQUIREMENTS 66
22.25 EASEMENT PAVING REQUIREMENTS 66
22.26 EASEMENT ACCESS REQUIREMENTS 66

SECTION 23 - DESIGN AND POLICY STANDARDS FOR BUILDING SEWERS 67
23.01 SIZE AND SLOPE 67
23.02 PIPE MATERIALS 67
23.03 ALIGNMENT 67
23.04 BUILDING PLUMBING (BUILDING DRAIN) LOCATION 67
23.05 GRADE 67
23.06 GRADE STAKES 68
23.07 CURB MARKING 68
23.08 CONNECTION TO EXISTING MAIN SEWER 68
23.09 ELEVATION AT CONNECTION TO MAIN SEWER 68
23.10 CONNECTION TO EXISTING BUILDING SEWER 68
23.11 CONNECTION TO BUILDING DRAIN (PLUMBING KICK-OUT) 69
23.12 CLEARANCES 69
23.13 PARALLEL TO FOOTING 69
23.14 CROSSING STORM DRAINS 69
23.15 CROSSING WATER MAINS 69
23.16 MINIMUM PIPE COVER 69
23.17 TRENCH INTERSECTIONS 70
23.18 HORIZONTAL UTILITY CLEARANCE 70
23.19 STRUCTURE TYPE AND LOCATION 70
23.20 OVERFLOW DEVICES 70
23.21 NUMBER OF BUILDING SEWERS REQUIRED 70
23.22 PRIVATE PUMPING STATIONS 71
23.23 NEW UTILITIES CROSSING EXISTING SEWER MAINS AND BUILDING SEWERS 71

STANDARD DETAILS 73

INDEX 111

(THIS PAGE LEFT BLANK INTENTIONALLY)

SECTION 1 - INTRODUCTION

1.01 INTRODUCTION

The STANDARD SPECIFICATIONS for sanitary sewers shall govern requirements, design and all work in connection with main and building sewer construction within the Union Sanitary District of Alameda County, California. District Information Bulletin, applicable portions of the latest version of the "California Plumbing Code" not in conflict with these Specifications, and all Ordinances of the District shall be considered a part of these Specifications. All plans, profiles, cut sheets, easement documents and specifications shall conform to the Standards established herein.

Special Provisions, specifications addenda, and/or notes on the plans shall be provided when deemed necessary, and shall be considered as part of the specifications for the work.

SECTION 2 - DEFINITIONS AND TERMS

2.01 DEFINITIONS AND TERMS

For the purpose of these specifications, the following words, and abbreviations shall be defined as follows:

ABANDONMENT - The permanent removal of main and/or building sewers from service.

BUILDING PLUMBING (BUILDING DRAIN) - The lowest piping of a gravity drainage system which receives the discharge from waste and other sewer drainage pipes inside the building and conveys it to the building sewer.

BUILDING SEWER - A Building Sewer shall refer to any existing or proposed sewer for private use. It extends from the main sewer to within 30 inches or less of the building or house to be served. It is subject to inspection and approval by the Union Sanitary District and when so approved, becomes the maintenance responsibility of the property owner, per Resolution No. 5, Section 5, dated December 12, 1949. Also referred to as a lateral or house sewer.

CALTRANS - Shall mean State of California, Business and Transportation Agency, Department of Transportation.

CITY - City of Fremont, City of Newark, or City of Union City.

CONTRACTOR - Company or individual authorized by the Union Sanitary District to perform work as called for by issuance of a sewer construction permit.

DEFLECTION - The changing in alignment or grade by movement of a pipe or joint. In the case of Flexible Pipe, it also means the outward movement of the sides of the pipe and the inward movement of the top and bottom of the pipe.

DEFLECTOMETER - Instrument used to determine the acceptability of deflections within Flexible Pipe. Also referred to as a mandrel.

DEVELOPER - Any public agency, private company, or individual who proposes the development of property which requires construction of sanitary sewers.

DISTRICT - Shall mean Union Sanitary District of Alameda County, California.

ENCROACHMENT AGREEMENT – An agreement between USD and a contractor that identifies the location and type of work allowed to be performed on USD Manholes and sanitary sewer mains by contractor.

ENGINEER - District Engineer of the Union Sanitary District or his/her authorized representative(s).

FIXTURE UNIT - The unit equivalent of plumbing fixtures as tabulated in the latest version of the California Plumbing Code.

FLEXIBLE PIPE - Sewer pipe made of Acrylonitrile-Butadiene-Styrene (ABS), Poly Vinyl Chloride (PVC), or High Density Polyethylene (HDPE).

HOUSE SEWER – See Building Sewer.

LAYERING – CADD file layer names.

LATERAL – See Building Sewer.

MANDREL – See Deflectometer.

MAIN SEWER - A main sewer shall refer to any existing or proposed sewer dedicated to public use within the public right of way or easement. It Is subject to inspection and approval by the Union Sanitary District and when accepted, becomes the maintenance responsibility of the Union Sanitary District, per Resolution No. 5, Section 5, dated December 12, 1949.

PIPE (SEWER) EMBEDMENT - Earth or other special material used to replace material removed from trenches during construction from the sewer subgrade to a point at least six (6) inches, but no more than twelve (12) inches above the outside top of the pipe barrel.

PLANS - Drawings approved by the Engineer for construction in the Union Sanitary District.

PRIVATE SEWER – The portion of the sewer main, including manholes, or building sewer located within private property, unless dedicated to the public with an easement. Maintenance responsibility of private sewers is with the owner of the private property.

RELATIVE COMPACTION - Refers to the Compaction Test No. 216 or 231 of the State of California, Caltrans, Standard Specifications.

RIGID PIPE - Sewer pipe made of Vitrified Clay (VCP) or Ductile Iron (DIP)

SEWER SUBGRADE - Is defined as being six (6) inches below the exterior bottom of the pipe.

SPECIFICATIONS - Union Sanitary District's "Standard Specifications and Information Bulletin" available at the District Office.

STANDARD DETAILS - Detailed standard drawings of approved construction in the Union Sanitary District.

TRENCH (SEWER) BACKFILL - Earth or other special material used to replace material removed from trenches during construction above the pipe embedment.

UTILITY – Refers to cable TV, water, storm, fiber optics, electrical, gas, recycled water, telecommunications, nitrogen and other public or private utility lines.

2.02 ABBREVIATIONS

ANSI – American National Standards Institute

ASTM – American Society for Testing Materials

AWWA – American Water Works Association

CADD – Computer Aided Drafting and Design

CBR – California Bearing Ratio

CPC – California Plumbing Code

DWG – Standard AutoCAD drawing file format

DXF – Standard CADD drawing file exchange format

GIS – Geographic Information System

NAD83 – North American Datum 1983 used for horizontal ground control

NAVD88 – North American Vertical Datum 1988 used for vertical ground control

NGVD29 - National Geodetic Vertical Datum 1929 used for vertical ground control

UPC – Uniform Plumbing Code

2.03 PIPE TYPES

ABS – Acrylonitrile-Butadiene-Styrene Pipe

DIP – Ductile Iron Pipe

PVC – Poly Vinyl Chloride Pipe

RCP – Reinforced Concrete Pipe

VCP – Vitrified Clay Pipe

HDPE – High Density Polyethylene Pipe

SECTION 3 - SCOPE OF WORK

3.01 SCOPE

The work shall include the furnishing of all materials, labor, tools, implements and equipment necessary to construct the sewers with all appurtenances, complete and ready to operate. All construction shall be done in strict accordance with the approved Plans and the provisions of these Specifications unless otherwise authorized by the Engineer.

3.02 GUARANTEE OF WORK

All work performed and materials used shall be guaranteed for a period of one (1) year after acceptance of the work by the District. A Surety Bond may be required to be filed with the District.

3.03 INDEMNIFICATION

Contractor shall defend, indemnify and hold harmless the District, and each of its directors, officers, employees, agents, and, if applicable, any public entities or private property owners on whose property the work is being performed from and against any and all liability, including but not limited to, penalties, fines, costs, losses, damages, expenses, causes of action, claims or judgments, including attorney's fees and expert witness fees (collectively "Claims") resulting from:

(a) any alleged or actual infringement or violation of any patent or patent right arising in connection with the performance of the Work and anything done there under;

(b) any injury to or death sustained by any person (including Contractor's own employees) or damage to property of any kind, which injury, death or damage arises from or is in any way connected with the Contractor's performance of the Work;

(c) any breach by Contractor of any of the obligations and covenants, and any other terms and conditions of the permit; or

(d) any violation by Contractor or its subcontractors of one or more occupational safety and health standards, regulations, or orders, where the Contractor or its subcontractor is found to be the "Causing Employer" as defined by Title 8, CCR Section 336.10. Contractor or its subcontractor shall have the right to appeal such citations at their sole expense. The District shall provide reasonable cooperation to Contractor in its appeal of any Citations. In the event Contractor or subcontractor either fails to timely appeal the Citations and/or Citations are upheld after an appeal hearing, Contractor shall promptly pay the fines that were assessed against the District.

Contractor's aforesaid obligation of indemnity and defense shall not extend to that portion of the Claims that is caused by the sole negligence or willful misconduct of the District its directors, officers, employees, agents, or, if applicable, any public entities or private property owners on whose property the work is being performed. These obligations of defense and indemnification shall extend to Claims asserted after the completion of the Work.

3.04 SAFETY

The Contractor shall be solely and completely responsible for conditions of the job site, including the safety of all persons (including employees) and property during the performance of the work. This requirement shall apply continuously and not be limited to normal working hours. Safety provisions shall conform to Cal-OSHA and all other applicable federal, state, county, and local laws, ordinances, codes, and regulations. Job site safety shall include confined space entry, traffic control, protection of public, above ground and below ground utility hazards and all incidental hazards. Where any of these are in conflict, the more stringent requirement will be followed. The Contractor's failure to thoroughly familiarize himself/herself with the aforementioned safety provisions shall not relieve him/her from compliance with the obligations and penalties set forth therein.

SECTION 4 - SITE PREPARATION

4.01 SITE PREPARATION

Site preparation shall consist of removing, and properly disposing of, all objectionable material such as fences, trees, brush, debris, etc., from the construction site which would interfere with the prosecution of the work.

On District contract jobs, approval must first be obtained from the Engineer to remove items that cannot practicably be replaced in kind, such as trees and limbs.

4.02 ACCEPTANCE OF GROUNDWATER FROM CLEANUP PROJECTS

Water generated from the cleanup of spills, leaking underground storage tanks, monitoring wells or other similar sources shall not be discharged through direct or indirect connections to a community sewer unless a discharge permit is issued by the District. The District may approve the discharge of such water at its discretion only when no reasonable alternative method of disposal is available. If a discharge permit is granted for the discharge of such water into the community sewer, the user shall pay the applicable charges and fees and meet such other conditions as required by the District. For the purpose of permits and fees, the discharge shall be considered a Class I discharge subject to permit requirements and discharge limitations or prohibitions set my USD Environmental Compliance. The District retains the right to terminate the discharge at any time for cause. Each discharge permit must be reviewed on an annual basis.

SECTION 5 - SEWER PIPE LINES

5.01 SEWER CONSTRUCTION MATERIALS

All sewer construction materials proposed to be used shall be new materials approved by the Engineer, prior to start of construction.

Where material specification numbers are used herein, they shall refer to the latest revision thereof.

For the purpose of these specifications, all pipe materials are classified as either "rigid" or "flexible."

5.02 PIPE MATERIALS

A. RIGID PIPE AND FITTINGS

Rigid pipe and fittings may be used only under prior approval of the Engineer to accommodate special circumstances. Rigid pipe, fittings, and joint materials specified herein consist of Vitrified Clay Pipe (VCP) and Ductile Iron Pipe (DIP). All materials incidental to rigid pipe installations shall be supplied by the Pipe Manufacturer. All rigid pipe required in odd lengths shall be cut using a proper cutting tool and guide that insures true line cut on planes perpendicular to the pipe axis. No bevel cuts for pipeline alignment will be permitted.

1. VITRIFIED CLAY PIPE (VCP) AND FITTINGS

Vitrified clay pipe and fittings shall conform to ASTM Designation C-700. Mechanical type joints having resilient properties conforming to ASTM Designation C-425 shall be used and installed. The pipe shall be tested during manufacture in accordance with ASTM Designation C-301. The use of VCP shall only be allowed with special approval from the District Engineer.

2. DUCTILE IRON PIPE (DIP) AND FITTINGS

Ductile iron pipe and fittings shall conform to ANSI/AWWA C151/A21.51 minimum pressure Class 350 for pipe 12 inches and smaller in diameter and minimum pressure Class 250 for pipe greater than 12 inches in diameter.

a. Bell and spigot joint assemblies shall conform to the requirements of Federal Specification WW-P-421c, Section 3.1.2 as it applies to Type II, Grade B or C pipe.
b. Standardized mechanical joint assemblies shall conform to the applicable requirements of ANSI/AWWA Standards for the pipe specified and ANSI/AWWA C111/A21.11.
c. Any ductile iron pipe used in gravity sewer application or in pressure sewer applications where air and gasses can accumulate shall be lined. Lining shall be with high density polyethylene, ceramic epoxy, or glass as specified herein.
    1) HDPE lining shall be factory applied, certified and tested for absence of holidays and pinholes. Lining shall be minimum 40 mils thick. Lining shall be light colored for improved video inspection purposes.
    2) Ceramic epoxy lining shall be Protecto 401 as manufactured by Induron Coatings or equal. Ceramic epoxy shall be applied 40 mil thick.
    3) Glass lining shall be 2 dual layer system such as Fast Fabricators MEH-32, Vitco SG-14 or equal. Glass lining shall be a minimum 10 mils thick.
    4) Linings shall be applied under pipe factory supervision in accordance with liner manufacturers' published requirements. Liners shall be spark tested at

voltage of 60 V per mil thickness. Pinholes and holidays will be cause for pipe rejection.

d. DIP shall be wrapped in polyethylene encasement per manufacturer's recommendation and conforming to ANSI/AWWA C105. Encasement shall be securely taped and extended/overlapped by a minimum of 12-inches.

B. FLEXIBLE PIPE AND FITTINGS

Flexible pipe, fittings and joint materials specified herein consist of Acrylonitrile-Butadiene-Styrene (ABS) and Polyvinyl Chloride (PVC). All materials incidental to flexible pipe installations such as gaskets, joint lubricants, cements, etc. shall be supplied by the pipe manufacturer. All flexible pipe required in odd lengths shall be cut using a proper cutting tool and guide that insures true line cut on planes perpendicular to the pipe axis. No bevel cuts for pipeline alignment adjustments will be permitted. All flexible pipe for new construction shall be solid wall pipe.

1. ABS SOLID PIPE

ABS Schedule 40 pipe shall only be used for building sewers. All ABS pipe and fittings shall be solid wall pipe manufactured in accordance with ASTM Designation D-2661, and tested in conformance with the requirements of paragraphs under Section 7 and 10 of ASTM D-2680, for SDR 26 pipe.

Cement used for non-gasketed ABS pipe shall conform to ASTM Designation D-2235. Jointing of wet pipe is not allowed. No primer shall be used in the pipe installation. Jointing shall be accomplished by applying a coating of cement to the inside of the socket, and to the outside of the spigot end of the pipe to be joined in sufficient quantity that when the spigot is fully inserted into a socket, a bead of excess cement will form around the entire circumference of the outside juncture of said spigot and socket. Excess cement shall then be removed.

2. PVC SOLID WALL PIPE

All PVC solid wall pipe and fittings shall be in accordance with the requirements for SDR 26 sewer pipe as stated in ASTM Designation D-3034, minimum wall thickness of SDR 26, ASTM Designation F-679 Type PS-115, or the requirements for PVC pressure pipe. Pipe joints and fittings shall be factory assembled, integral wall bell and spigot configuration, compatible with the pipe.

Gasketed PVC Pipe shall have a solid cross section rubber ring gasket. The gasket shall be securely attached to the pipe to prevent displacement of the gasket when installed in the field. All rubber ring gaskets shall be in accordance with ASTM Designation F-477. Lubricant used for field assembly of gasketed PVC Pipe shall have no detrimental effect on the gasket, joint, fitting or pipe and shall be as recommended by the manufacturer.

Cement used for non-gasketed PVC Pipe shall conform to ASTM Designation D 2564. Jointing of wet pipe is not allowed. Jointing of pipe shall be accomplished by applying a coating of cement to the inside of the bell and the outside of the spigot. The cement shall be applied in sufficient quantity to produce a bead of cement around the entire circumference of the pipe joint. Excess cement shall then be removed.

3. PVC PRESSURE PIPE

Where PVC pressure pipe is required, PVC pressure pipe shall conform to the requirements of AWWA C-900-16 minimum Class 150 for Pressure Pipe manufactured in sizes from four (4) inches to thirty-six (36) inches in diameter. PVC pressure pipe

shall be furnished in Ductile Iron Pipe equivalent outside diameters with rubber gaskets, separate couplings, or approved equal. Thrust restraint shall be provided at valves and changes of direction for pressure flow applications.

4. HDPE PIPE

All HDPE pipe shall be solid wall, butt-fused pipe conforming to AWWA C906 and ASTM D-3035 and shall meet the minimum cell classification of 345434 E for gravity sewers or 345434 C for pressure sewers as described in ASTM D3350. HDPE pipe shall meet the requirements of TYPE III, Class B, category 5 grade P34 material as described in ASTM D-1248. The pipe may contain no more than 10 percent reworked resin gathered from within the manufacturer's own plant from resin meeting these specifications. Pipe color for gravity sewer application shall be natural gray. Pipe color for pressure sewer applications may be natural gray or black. Wall thickness shall be no less than DR 21.

The pipe shall be marked at 5-foot intervals or less with a coded number that identifies the manufacturer, SDR, size, material, machine, date and shift on which the pipe was extruded.

Any pipe, which has cuts or abrasions in the pipe wall exceeding 10 percent of the wall thickness, shall be removed from the site.

The pipe shall be joined using the butt fusion method in strict accordance with the pipe manufacturer's recommendations and ASTM F2620. The fusion equipment shall be capable of meeting all conditions recommended by the pipe manufacturer, including, but not limited to, fusion temperature, alignment and fusion pressure.

Pipes 4-inches to 12-inches in diameter shall be de-beaded. Pipes larger than 12 inches in diameter are not required to be de-beaded. De-beading method shall be pre-approved by the District.

Fittings shall conform to ASTM D-3261. Electro-fusion fitting may be used provided approval is granted in advance by the Engineer.

5. STORAGE

a. Pipe shall be stored if possible at the job site in unit packages provided by the manufacturer. Caution shall be exercised to avoid compression, damage or deformation to bell ends of the pipe and barrel.
b. When unit packages of flexible pipe are stacked, insure that weight or upper units do not cause deformation to pipe in lower units.
c. Flexible pipe unit packages shall be supported by racks or dunnage to prevent damage to the bottom during storage. Supports shall be spaced to prevent pipe bending.
d. When long-term storage with exposure to direct sunlight is unavoidable, flexible pipe shall be covered with an opaque material while permitting adequate air circulation above and around the pipe as required to prevent excessive heat accumulation.
e. Flexible pipe shall not be stored close to heat sources or hot objects such as heaters, boilers, steam lines, engine exhaust, etc.
f. Gaskets, if required, shall be protected from excessive exposure to heat.

6. DEFLECTION

The inside diameter of an installed section of flexible pipe shall not be allowed to deflect more than five percent (5%) of the base inside diameter (as defined in ASTM D3034) following 30 days after installation. Deflection testing conducted during daily installation and any time prior to 30 days after installation, shall be based on an allowable deflection of 3-1/3 percent of the base inside diameter. The testing mandrel sizes for PVC SDR 26 pipe are shown in the following table. For flexible pipe materials other than PVC SDR 26, the mandrel diameter shall be calculated based on the minimum inside diameter according to manufacturer's published information.

Nominal Diameter, inches	Pipe Specification	Base Inside Diameter, inches	96-2/3 Percent Mandrel Diameter(1), inches	95 Percent Mandrel Diameter(2), inches
8	PVC SDR 26	7.488	7.24	7.11
10	PVC SDR 26	9.342	9.03	8.87
12	PVC SDR 26	11.102	10.73	10.55
15	PVC SDR 26	13.575	13.12	12.90
18	PVC SDR 26	16.570	16.02	15.74

(1) Use for testing less than 30 days after installation
(2) Use for testing 30 days or more after installation

Flexible pipe deflection shall be checked by means of a 9-arm "go – no go" mandrel pipe deflection gauge. The mandrel shall have pulling rings at each end and shall be pulled by hand through the sewer without the aid of mechanical pulling devices. The pipe deflection shall be checked in the presence of the Engineer after conducting air testing described in Section 12.

The mandrel deflection gauge shall be fabricated to permit passage through installed sections of pipelines within the specified tolerances for flexible pipe. Any section or sections of flexible pipe that does not permit deflection gauge passage will not be accepted and said section or sections shall be properly repaired or replaced and rechecked as directed by the Engineer.

7. MISCELLANEOUS REQUIREMENTS

a. Wyes or tees for buildings sewers or lateral connections shall be completed using in line bell and spigot type fittings molded from resins specified. Exception to this is when a saddle-type fitting is authorized on the plans, or as directed by the Engineer in the field. Fittings and taps that protrude into the sewer main will not be allowed.

b. Fittings shall be sized to receive type of pipe specified for building sewer lateral. Installation of fittings will be in accordance with manufacturer's recommendations.

c. Two water stops specified by the pipe manufacturer and approved by the District shall be installed at all manhole connections. The water stops shall be placed in the manhole base and centered under the manhole wall. The water stops shall be firmly fitted around the pipe exterior. Said water stops may also consist of a manhole coupling with rubber sealing rings cast into the structure base. No rubber boot type connections are allowed. The water stops shall consist of at least two continuous circles of contact such as two O-rings or a shear band coupling with two stainless steel bands.

C. OTHER PIPE

Other pipe materials may be used for sewer installation provided approval by the Engineer is granted.

The pipe shall be joined with couplings as furnished with the pipe by the manufacturer, and installed as specified by the manufacturer.

5.03 PIPE COUPLINGS

Pipe couplings (such as shear band couplings) shall be used to join pipes of unlike materials and to join pipes of like materials when a splice is made. Pipe couplings shall be banded rubber couplings with four clamps and Type 316 stainless steel shear bands. Pipe couplings shall be fastened on each end with Type 316 stainless steel worm-gear bands. Couplings shall be installed as recommended by the coupling manufacturer. A concrete collar around the joint may be required by the Engineer.

Acceptable shear band couplings include Fernco 5000 Repair Coupling Series and Mission Rubber Adjustable Repair Coupling.

5.04 SADDLE

A tee-branch saddle fitting fabricated of material approved by the Engineer and with a flange which will prevent the saddle from entering the main sewer beyond its inside surface. The flange shall have a curvature designed for the size main on which it is to be used.

The saddle shall create an airtight connection and at the option of the Engineer may require air testing.

5.05 EMBEDMENT

All pipe shall be embedded and backfilled as specified with extra care taken in compaction of said embedment and backfills as specified in Section 9 of these Specifications.

5.06 STAINLESS STEEL BANDS

Stainless steel bands shall be ASTM A-167, Type 316. Any fitting or coupling using stainless steel bands shall have the area of the band wrapped twice with 10 mil plastic tape.

SECTION 6 - PORTLAND CEMENT CONCRETE AND MORTAR

6.01 CONCRETE

Concrete shall consist of a mixture of Type II Portland Cement, sand, fine aggregate, coarse aggregate and water. The proportions of the water, sand and aggregate shall be regulated so as to produce a plastic, workable and cohesive mixture yielding the strength indicated. Unless noted otherwise, all concrete shall be Class “A”.

A. CLASS "A"

Class "A" concrete shall contain 564 pounds (6 sacks) of Portland Cement per cubic yard and shall have a minimum 28-day compressive strength of 4,000 psi in accordance with ASTM C-39.

B. CLASS "C"

Class "C" concrete shall contain 376 pounds (4 sacks) of Portland Cement per cubic yard and shall have a minimum 28-day compressive strength of 2,500 psi in accordance with ASTM C-39.

All material required, and the procedure of mixing, shall meet the requirements set forth in Section 90 of Caltrans State Standard Specifications, except that 3/4 inch maximum size aggregate shall be used and slump ranges of three (3) to four (4) inches for Class "A" concrete and four (4) to eight (8) inches for Class "C" concrete shall be maintained.

No admixtures will be permitted unless authorized by the Engineer.

Cement and aggregates shall be stored in such a manner as to prevent deterioration or intrusion of foreign matter.

Mixed concrete shall be used before initial set and in no case will retempering with additional water be permitted.

6.02 MORTAR AND GROUT

The dry materials used for mortar shall be thoroughly mixed with sufficient clean water to produce a uniform, plastic, workable and cohesive mixture.

Sand for mortar and grout shall be clean, dry, well-graded sand, free of organic or other deleterious matter, silt or other objectionable inorganic matter, pH level ≥7, and shall be of such size as determined by laboratory sieves, conforming to the following gradation.

Sieve Size	Percent Passing
3/8-inch	100
No. 4	95-100
No. 8	80-100
No. 16	50-85
No. 30	25-60
No. 50	5-30
No. 100	0-10
No. 200	0-5

Cement shall be Type II Portland Cement. An industrial grade all-purpose non-shrinking cement such as “All Crete” or “Speed Crete” may be used.

No admixtures shall be used in the mortar or the grout unless otherwise specified or approved by the Engineer.

Mortar shall be composed of cement and sand proportioned and mixed as specified herein. Type "A" mortar shall be used unless Type "B" is specified by the Engineer.

A. TYPE "A"

Type "A" shall consist of one part by volume of cement and two parts by volume of sand. Minimum compressive strength shall be 5,000 psi at 28 days.

B. TYPE "B"

Type "B" shall be a case basis, mixed and used in accordance with manufacturer's recommendations. Minimum compressive strength shall be 5,000 psi at 28 days.

Mixed mortar shall be used before initial set and in no case will retempering with additional water be permitted.

SECTION 7 - SEWER PIPE AND STRUCTURE INSTALLATION

7.01 SEWER PIPE LAYING

A. CONSTRUCTION STAKING

All main sewers and building sewers shall be staked in the field in accordance with the requirements of the Union Sanitary District. The grades and alignment of the sewer so staked shall be approved by the Engineer prior to start of sewer construction. (See Standard Specifications Sections 19.02, 22.07 and 23.06 for staking requirements and submission of cut sheets.)

B. ALLOWABLE DEVIATION OF ALIGNMENT AND GRADE

The horizontal deviation of the sewer from the line shown on the Plans shall be not more than three (3) inches. The sewer grade shall not deviate from the profile shown on the Plans, and the grade shall be maintained during and after backfilling operations. Sewer grades with deviations exceeding 1/2 inch shall be removed and replaced at Contractor's expense. If deviations less than 1/2 inch from the design grade occurs, pipe joints may be deflected to bring the invert back to grade. Grade corrections shall be made gradually to prevent sags in the pipe invert at low spots. Pipe shall be installed to be free draining (no sags) between any two points. No reverse (adverse) grade will be allowed.

C. LASERS

When laying main sewers, unless otherwise approved by the Engineer, the contractor shall use a commercial laser grade setting system. When using a laser, the following requirements and conditions must be met:

1. The Contractor shall have the responsibility of providing an instrument operator who is qualified and trained in the operation of the laser and said operator shall adhere to the provisions of the State of California Construction Safety Orders issued by the Division of Industrial Safety. Attention is particularly directed to Section 1514, 1800 and 1801 of said orders for applicable requirements.
2. When using a laser, the laser shall be connected firmly to a tripod, set firmly on compacted soil. The laser height of instrument shall be taken from one (1) offset hub and checked with at least two (2) more hubs, until 2 or more hubs show consistent readings or until readings coincide. This shall be done every time the laser is set up, or disturbed.
3. The laser and level instruments shall be properly calibrated within six (6) months prior to use. A laser or level instrument found to be out of calibration or without records showing it has been calibrated within the last six months, shall be removed from the job site until it has been properly calibrated.

D. GRADE LINE

When laying pipe for building sewers, in lieu of a laser grade setting system, the Contractor may use a grade line. When laying the pipe, except where vertical curves are shown on the Plans, or otherwise authorized by the Engineer, the Contractor shall use a grade line with at least two (2) adjacent runs up at all times in order to detect any variation from a straight grade. The grade line must be established over the center of the trench in vertical trenches and over the center of the pipe in V-type trenches during the laying operations, and grade line shall be maintained up until the pipe grade is checked by the Engineer.

The grade line shall be accurately and securely fastened at each staked station to securely erected batter boards and kept taut at all times.

The measuring pole shall be a solidly constructed straight pole with a metal foot at one end at right angles to the pole. The batter board construction, string line and measuring pole construction shall be approved by the Engineer prior to start of sewer pipe laying.

In caving ground and in other circumstances when the above is not practicable, and when so authorized by the Engineer, the pipe must be checked by surveying instruments under the direction of a Registered Civil Engineer or Land Surveyor who shall accept the responsibility for the pipe being installed on the proper grade.

E. SEWER PIPE PLUGS

Sewer pipe stubs, or other open ends, which are not to be immediately connected, shall be plugged or capped with a standard watertight plug or cap as approved by the Engineer for use in the particular installation. The plugs or caps may only be removed when so authorized by, and in the presence of, the Engineer.

F. JOINT DEFLECTIONS AND MINIMUM RADIUS

When approved by the Engineer, curved sewers shall be in conformance with the following requirements.

1. RIGID PIPE

The deflection in the joint between any two successive pipe sections shall not exceed 75% of the maximum allowable deflection as recommended by the pipe manufacturer. For rigid pipe, two (2) foot minimum pipe lengths may be supplied or pipe may be cut, if approved joint material is available, to install short radius curves and conform with the joint deflection limitations. When short lengths are to be used, it shall be so shown on the Plans.

2. FLEXIBLE PIPE

For flexible pipe, horizontal curves shall be achieved without joint deflection. Flexible pipe horizontal curves shall be achieved by bending pipe barrel to the required radius and securing the bent pipe barrel with stake restraints prior to backfilling. The minimum allowable bending radius is shown in the following table.

Pipe Diameter, inches	Minimum Radius, feet
4	100
6	150
8	200
10	250
12	300
15	350
18	450

G. VERIFICATION OF EXISTING SEWER OR STRUCTURE

Where connection is to be made to an existing sewer or structure, said existing sewer or structure shall be uncovered and checked for location and elevation prior to submitting cut

sheets. Any discrepancy between the Plans and field information shall be reported immediately to the Engineer.

H. COMMENCEMENT OF NEW SEWER PIPE LINE

Unless otherwise authorized by the Engineer, the laying of the pipe in finished trenches shall be commenced at the lowest point of the project, with the spigot ends abutting and pointing in the direction of the flow. The joints shall be carefully centered so that when laid to proper grade and alignment as designated on the Plans, they will form a sewer with a uniform invert.

I. SEWER PIPE LINE THROUGH MANHOLES

Except when precast manhole base blocks are used, sewers shall be laid continuously through proposed manhole locations on all straight runs and at angle points. When excavation is made below the pipe for manhole construction, care must be taken that the pipe spanning this area is firmly supported.

J. SHEAR BAND COUPLINGS AT MANHOLES

For rigid pipes, a shear band coupling with four clamps, shall be installed at a point 6 to 12 inches outside of the manhole base block on both upstream and downstream sides. In all cases, the flexibility of the coupling must be maintained by keeping all concrete away from the joint or coupling. A bell joint is not acceptable for this requirement.

K. GROUND TO BE FILLED

In ground to be filled, fill shall be placed up to 3 feet above where the outside of the pipe would be and laterally to a width of the pipe outside diameter plus six (6) feet centered on where the pipe would be, and compacted prior to the construction of the sewer. The compaction requirements, as specified by the Agency governing the fill, shall be considered adequate except that not less than 90% relative compaction per ASTM D-1557 “Modified Proctor” shall be achieved. Evidence of these results in the areas concerned shall be furnished to the District (from an approved testing laboratory) prior to construction of the affected sewer.

L. HANDLING OF PIPE

Pipe shall be protected during handling against impact shocks. Prior to making pipe joints, all surfaces of the portion of the pipe to be joined shall be cleaned, dried, primed or otherwise prepared as called for in these Specifications. The interior of all pipe shall be kept free from all dirt and foreign matter as the work progresses.

—At the close of each day’s work, and at such other times when the pipe is not being laid, the ends of all open pipes shall be closed with a water tight plug or cap. Any modification of this requirement must be approved by the Engineer.

M. FIELD CUTTING PIPE

Unless otherwise permitted by the Engineer, pipes that must be cut in the field shall be cut with mechanical cutters or as recommended by the pipe manufacturer.

7.02 SPLICE

When a pipe is to be spliced into an existing sewer, the sewer shall be exposed and then mechanically cut at right angles to the pipe barrel, with sufficient length removed so that a pipe section with plain ends can be joined to the cut pipe with approved couplings to form an airtight joint. All work shall be done in the presence of the Engineer. Care must be taken to

fill all voids under and around the pipe splice with Type "B" Import material to properly support the new pipe and prevent any settlement of the spliced section.

7.03 MANHOLE

Manholes shall be sound watertight structures, constructed as shown on the Standard Details or on the Plans in the case of special structures. The type of manhole and its location is to be shown on the Plans. The manhole shall be constructed to the rim elevations shown on the Plans.

A. MANHOLE BASE BLOCK

The base block shall be poured using Class "A" concrete and in accordance with the design shown on the Standard Details. Precast base blocks may be used for standard manholes approved by the Engineer and City jurisdiction. Precast base blocks may not be used for trunk manholes.

The concrete pour shall be made only on dry, firm undisturbed ground or on "rock ballast" placed on undisturbed ground. If the pour is on filled ground, the ground shall be compacted to a 95% Relative Compaction per ASTM D-1557 “Modified Proctor.” The concrete shall be placed with a continuous pour deposited in such a manner that segregation of material does not occur. Once deposited, the concrete shall be consolidated with mechanical vibrators so as to secure a dense watertight mass.

An approved metal form ring shall be used so that a level keyed slot is formed in the fresh concrete to receive the pre-cast manhole shaft section.

When the sewer pipe has been laid through the proposed manhole, the top half of the sewer pipe shall be removed to within one (1) inch longitudinally of the inside wall of the manhole and the cut finished with mortar as specified by the Engineer.

The width of opening at the top of base block shall be the inside diameter of the pipes in the manhole.

In angle point manholes and in junction manholes, the pipes shall be joined by smooth curves, warped to conform to the lower half of the pipe. In all cases, the upper portion of the manhole channel from the mid-point of the pipes in the manhole to the top of the base block shall be constructed vertically.

When the manhole channel is not completed in the original pour, it shall be finished smooth by use of mortar with per Section 6.02. Before application of the mortar, the existing concrete surface shall be thoroughly cleaned and roughened to secure a firm bond. All channels shall be troweled smooth so that a smooth uninterrupted surface is achieved. The top of the base block shall be troweled to slope towards the channel at an approximate slope of one (1) inch in six (6) inches.

Placement of manhole components on cast-in-place manhole bases shall not occur until the next working day, at a minimum, after the base has been placed.

B. MANHOLE SHAFT AND PRECAST BASE BLOCK

The manhole shaft shall be composed of precast concrete sections. These sections shall be installed plumb and aligned so that the steps are in a straight vertical line. Unless otherwise required by the Engineer, the steps shall be aligned horizontally forty-five (45) degrees away from the direction of the flow of the sewer main on the upstream side.

Precast concrete sections shall be in accordance with the Standard Details and shall conform to the requirements of ASTM Designation C-487 except that Type II or Type V Portland Cement shall be used. The cone section shall be concentric unless eccentric is allowed by the Engineer.

Unless otherwise directed by the Engineer, manholes to be installed in all proposed City streets and paved Public Easements will be constructed with standard cone section per Standard Detail Sheets. In these cases, the neck rings and cast rings shall be installed after the street section has been completed.

Joints between precast sections shall have a "Ram-Nek" flexible plastic gasket installed between the tongue and groove joint to make a watertight joint. After the shaft is in place, the joint shall be trimmed smooth with a sharp tool on the inside of the manhole.

Manhole sections will be ordered without steps when the distance between the top rim and top of base block is less than four (4) feet. Precast manhole base blocks, when allowed by the Engineer and city jurisdiction for standard manholes, shall have a standard pipe bell cast into the base block. Rubber boot type connections are prohibited.

C. DROP CONNECTIONS

Drop connections are only allowed with prior District Engineer approval. When a drop connection is shown on the Plans, it shall be included as part of the manhole construction. The drop shall be made with approved fittings outside the manhole shaft as shown on the Standard Details. The lowest pipe shall be constructed into the base block by aforementioned channeling procedures. The base block shall be enlarged to encase these lower fittings.

After the manhole shaft is in place, the upper pipe run shall be constructed through the precast wall, flush with the inner wall. The hole between the pipe and the precast section shall be mortared to a watertight condition. This pipe and drop shall then be encased in concrete to the point where the upstream sewer trench is of normal width and depth.

D. MANHOLE CASTINGS

Manhole frame and cover shall be Class 30 cast iron designed as shown on the Standard Details and conforming to ASTM Designation A-48. Manufacture's name, initials or logotype shall be cast in the frame and cover. The bearing surfaces of the frame and cover shall be machined and the cover shall seat firmly without rocking. Before leaving the foundry, all casting shall be protected with an asphalt coating as follows:

1. The surface to be protected shall be clean, uncoated cast iron free of oil, grease, scale or rust.
2. The casting shall be painted with asphalt paint or as an alternative the entire casting shall be dipped in asphalt paint.

The manhole frame and cover shall be permanently set when so authorized by the Engineer.

The frame shall be centered on the manhole shaft and laid on mortar to final grade. The mortar shall be neatly struck.

E. MANHOLE STEPS

Steps shall be installed in the manhole cone and barrel sections by the manhole manufacturer before being shipped to the job site unless the manhole is specifically ordered without steps.

Steps for manholes shall be made of Copolymer Polypropylene that encapsulates a 1/2" grade 60 steel reinforcing rod. This step shall conform to ASTM Designation C-478, Paragraph 16.

The steps shall be PS2-PFS manhole steps as manufactured by M.A. Industries Inc. (800-241-8250), P-13938 as manufactured by Lane International Corporation (800-666-0076), or approved equal.

F. MANHOLE COLLAR

Unless otherwise specified by the Engineer, a concrete collar shall be poured around the frame and shaft so as to securely anchor the frame to the shaft. (See the Standard Details)

G. MANHOLE LINERS

All trunk manholes and drop manholes shall be lined with 65 mil thickness PVC liner embedded into the manhole concrete at time of pour. Standard manholes shall be lined where required by the Engineer. Liner shall be T-lock as manufactured by Ameron or approval equal. Liner shall extend from the bottom of the grade rings to the top of the bench wall shelf.

Joints in liner shall be heat welded with strips of PVC, same thickness as liner. Liner and joints shall be spark tested in the presence of the Engineer. Spark testing shall be performed at minimum 15,000 volts with a Tinker and Razor Holiday Detector, or approved equal. Any holidays or pinholes shall be patched by thermal welding strips over the pinhole and the area patched shall be retested. The manhole will not be accepted until it is holiday and pinhole free.

7.04 RISER (MAIN SEWER ONLY)

A. RISER SHAFT

The riser shaft shall be a straight piece of pipe joined to the main by means of a 45-degree bend fitting, with both shaft and fitting joined in the same manner, as required in the pipe laying section of these Specifications.

The shaft shall be installed at a 45-degree angle and so positioned that the 45-degree bend fitting is located at the station shown on the Plans. The shaft will be cut smoothly at a 45-degree angle so that the highest point will extend to within two (2) inches of the casting cover. The exposed end of the shaft shall be temporarily sealed to prevent dirt or debris from entering into the sewer until such time as the frame and cover are permanently installed.

B. RISER CASTINGS

The riser frame and cover shall be Class 30 Cast Iron designed as shown on the Standard Details and conforming to ASTM Designation A-48. Manufacture's name, initials or logotype shall be cast in frame and cover. The cover shall seat firmly without rocking. Before leaving the foundry, all castings shall be cleaned and coated with asphaltic material.

The frame shall be centered on the riser shaft opening so that the pipe does not touch the frame. When the frame has been set to final grade, a concrete block shall be poured around the frame.

The riser frame and cover shall be permanently set when so authorized by the Engineer.

7.05 CLEANOUT TO GRADE (BUILDING SEWER ONLY)

A wye-branch fitting, with branch the same diameter as the building sewer, shall be installed so that it opens in a direction opposite to the flow of the sewer, vertically above the pipe barrel. Necessary fittings and pipe, of the same diameter as the building sewer, shall be used to bring the "cleanout" vertically to ground surface and an approved box and cover installed, all as shown on the Standard Details.

Cleanouts shall be constructed as shown on the Standard Details and in locations shown on approved plans. A transition coupling and cleanout shall be provided and installed at the property line.

The vertical pipe shall be plugged below subgrade of surface in improved areas and sufficiently below the ground surface in unimproved areas so as to be protected during final site preparation. After surface work is complete, the riser pipe will be extended to finished grade, capped with an airtight threaded body and cap plug and protected with an approved cleanout box per Standard Details.

7.06 TWO-WAY CLEANOUT TO GRADE (BUILDING SEWER ONLY)

A two-way fitting with a riser pipe, both of the same diameter as the building sewer, shall be installed vertically above the pipe barrel. The "two-way cleanout to grade" will be brought to finished grade, capped with an airtight threaded body and cap and protected with an approved cleanout box per Standard Details.

When a plastic two-way fitting is used, a six (6) inch long plastic stub must be installed into the downstream bell of the two-way fitting in order to permit a proper coupling to be made with other types of material used for the building sewer.

7.07 TEST WYE (BUILDING SEWER ONLY)

A wye-branch fitting, with branch the same diameter as the building sewer, shall be installed so that it opens in a direction opposite to the flow of the sewer vertically above the pipe barrel. The test wye shall not be removed after testing, but shall be capped with an airtight threaded body and cap and left in place. Rubber caps shall not be used.

7.08 SEWER THROUGH CASING

Unless otherwise required by the Engineer, when main sewer pipe cannot be installed by open cut methods, it must be installed in a casing as shown on the Plans.

Pipe casing size, material and thickness will be as specified on the Plans.

The casing material will be delivered to the job site with ends fabricated to a true right angle with the axis of the pipe to facilitate accuracy of jacking.

Welded Steel Pipe Casing shall conform to ASTM Designation A-53 Grade B, A-139 grade B or A-252 Grade 2.

Where approved by the Engineer, 4 inch and 6 inch pipes can be bored; larger diameters require casing. The minimum inside diameter of the pipe casing shall be eight (8) inches greater than the maximum outside diameter of the sewer to be installed therein, with a minimum outside diameter of thirty (30) inches for any casing unless otherwise approved by the Engineer.

The casing sections shall be joined by a continuous watertight weld.

The jacking pits shall be excavated and backfilled in accordance with Section 8 and 9 respectively, of these specifications. A submittal for the jacking pit installation shall be required prior to the start of the jacking operation.

The guide rails for the jacking machine shall be accurately set and checked by a licensed surveyor, so that the casing, while being jacked, will be guided to correct line and grade to enable the sewer pipe to be centered in the casing.

The front of the casing pipe shall be provided with mechanical arrangements or devices that will positively prevent the auger from leading the pipe so that no unsupported excavation is ahead of the pipe. The auger and cutting head arrangement shall be recessed to prevent the flowing of material from the face of the casing into the casing. The auger and cutting head arrangement shall be removable from within the pipe in the event an obstruction is encountered.

The Contractor shall be responsible for surface subsidence and damage or disturbance to adjacent property and facilities that may result from the Contractor's Construction method. In the event that loose material is encountered and cave-ins occur or are anticipated, all jacking will be discontinued, approved shoring shall be provided and all voids filled by pressure grouting.

It is recommended that the Contractor make frequent checks on the casing grade during installation. Grade stakes, indicating pipe invert elevations, shall be located at both ends of proposed casing.

Immediately after completion of the jack and bore operation, lean grout shall be injected through the grout holes of casings 30-inches and larger in a manner that will completely fill all voids outside the casing pipe resulting from the jack and bore operation. The lean grout shall consist of one part Portland cement, four parts sand, 2% bentonite by weight of cement, and sufficient water to produce a workable mixture. Bentonite shall be commercially processed powdered bentonite. Sand gradation shall be 100% pass No. 8 sieve and at least 45% pass No. 50 sieve. Grout pressure is to be controlled so as to avoid deformation of the casing and/or avoid movement of the surrounding ground. Sand for grout to be placed outside the casing shall be of such fineness that 100% will pass a No. 8 sieve and not less than 35% will pass a No. 50 sieve. After completion of grouting, the grout connections shall be closed with cast-iron threaded plugs.

When the casing has been completed, and before the sewer is installed, it shall be inspected and approved by the Engineer. Pipe material as shown on the Plans shall then be joined and installed on proper grade through the casing.

The sewer pipe shall be securely supported through the casing as shown on the Standard Details. After the sewer pipe is installed, it shall be given a preliminary air test in the presence of the Engineer (See Section 12 of these Specifications) and internally inspected by closed circuit television (see Section 13 of these Specifications). After the test is satisfactorily completed, and the television inspection favorably reviewed, the annular space between the pipe and the casing shall be filled with dry sand (see Section 6.02 of these Specifications) mechanically blown in or filled with cellular concrete so as to completely fill all voids after which the space between the end of the casing and the pipe shall be sealed to a watertight condition. The pipe shall be anchored and secured to prevent movement during the filling of the annular space.

7.09 REHABILITATION OF BUILDING SEWERS USING PIPE-BURSTING

A. GENERAL

Building sewers in poor condition due to cracked pipe or joints, leaking joints (infiltration), or root intrusion may be rehabilitated using the pipe-bursting method, if approved in advance by the District. Certain conditions, such as building sewers with insufficient grade, sags, or in close proximity to other utilities may not be suitable for rehabilitation using the pipe-bursting method. This specification is intended for rehabilitation of 4-inch or 6-inch diameter building sewers only.

Approval of the pipe-bursting method by the District can only be made after reviewing the pre-rehabilitation inspection video, which is a required submittal item. Approval of the submittal by the District does not imply that the proposed pipe-bursting installation is appropriate for the specific location being proposed for installation. The Contractor is completely responsible for all elements of the pipe-bursting installation, including safety of installation, conflicts or damage to: utilities, property improvements, sidewalks, driveways, curbs, gutters, pavement, and equipment, or installation problems caused by existing building sewer pipe materials, subsurface conditions, or access restrictions.

B. DESCRIPTION

Pipe-bursting rehabilitation consists of splitting and expanding the existing pipe and simultaneously pulling, or pushing, a new high-density polyethylene (HDPE) pipe into the resulting void. The method requires the excavation of two pits. The insertion pit shall be used to insert the pipe splitting device followed by the new pipe. The exit pit shall be used to receive the splitting device and new pipe through the existing building sewer. After insertion, a cleanout to grade shall be installed at the property line and the new pipe shall be connected to the existing pipe.

C. SUBMITTALS

1. A letter signed by the property owner authorizing the installation of the building sewer using the pipe-bursting method. The letter must also acknowledge that the pipe-bursting procedure and limitations have been explained to the property owner by the Contractor.

2. Pre- and post-rehabilitation video inspections: The Contractor shall inspect the building sewer using a CCTV camera and provide video files and inspection reports for each building sewer on a flash drive or in a DVD format. Submitted files shall only contain information from one building sewer per flash drive or DVD. The video shall show the footage of the camera and shall include the complete length of the building sewer to be replaced. Prior to video inspection, the existing pipe must be clean of all debris and must be wet so that sags can be easily detected. The video inspection shall adequately document the location of the work by capturing the address number of the structure and any other details pertinent to the work. If the videos do not adequately show the location of the work or the condition of the lateral, the Engineer will require the video inspections to be redone and may require a District Representative to be present for video inspections.

D. EQUIPMENT

The pipe-bursting equipment may be either hydraulic, pneumatic, or the cone cracking type. The bursting head shall be specially designed to force its way through the existing pipe materials by fragmenting the pipe and compressing the old pipe section into the surrounding soil as it progresses. The head shall be designed to produce a maximum opening dimension of 1 inch (diameter) larger than the outside diameter of the new HDPE pipe. The pipe-bursting system shall be used to replace the existing building sewer with the same nominal size pipe. The system shall not be used to increase the size of the building sewer.

E. PIPE

The HDPE pipe shall be as specified in Section 5.02 of these Standard Specifications.

F. UTILITIES

At least 48 hours prior to excavation, the Contractor shall call Underground Services Alert (USA) at 811 or (800) 227-2600. The Contractor shall request utility markings for the entire reach of the proposed pipe burst. The Contractor shall pothole all utilities crossing the

proposed pipe burst to determine the clear distance between each utility and the existing building sewer. Utilities with less than 12 inches of clearance or water mains and services with less than 24 inches of clearance shall be left exposed during the pipe-bursting installation.

G. INSTALLATION

1. After coordinating with the property owner and residents, plug existing building sewer or provide by-pass pumping system to prevent sewage spills. Dumping or free flow of sewage within the excavation or on public or private property, gutters, streets, and storm drain facilities is prohibited.

2. The insertion pit shall be large enough so that HDPE pipe can be installed without exceeding the minimum bending radius. The minimum bending radius shall be 20 times the outside diameter of the pipe or as recommended by the pipe manufacturer, whichever value is larger.

3. After installation, the Contractor shall allow a minimum of four (4) hours for relaxation due to tensile stressing and to allow the pipe to thermally acclimate with the soil prior to installing final connections to main sewer or building sewer. Temporary connections can be installed sooner to reinstate sewage flows.

4. Any installed pipe, which has cuts or abrasions in the pipe wall exceeding 10 percent of the wall thickness, shall be cut out and removed from the site.

5. After final cleaning of the building sewer, water shall be introduced into the new pipe section and the post-rehabilitation video inspection shall be completed and the video submitted to the District for approval.

H. TESTING

Refer to Section 12.01 for testing requirements.

I. CONNECTIONS

A cleanout to grade, including box and cover, shall be installed at or near the property line as shown on the Standard Details. Connections shall be completed using shear band couplings with Type 316 stainless steel bands.

SECTION 8 - EXCAVATION

8.01 DEFINITION

Excavation shall mean all of the below ground-surface work (including cutting of pavement; control of ground water, storm water and other extraneous water; removal, handling, stockpiling and/or proper disposal of removed material and water) necessary to prepare a firm, dry bed for the sewer line and structures.

The Contractor shall be solely and completely responsible for conditions of the jobsite, including safety of all persons and property during performance of the Work. This requirement shall apply continuously and not be limited to normal working hours. Safety provisions shall conform to U.S. Department of Labor (OSHA), the California Occupational Safety and Health Act (CalOSHA), and all other applicable Federal, State, County, and local laws, ordinances, codes, including but not limited to the requirements set forth below, and any regulations that may be detailed in other parts of these Standard Specifications. In the event of conflicting requirements, the most stringent requirement as it pertains to the Contractor's safety responsibility, shall be followed by the Contractor.

The excavation shall be made to enable the sewer to be laid to the grade and alignment designed on the Plans.

8.02 OPEN TRENCHING

The excavation for sewers shall be made by open trenching except where tunneling is necessary. Existing pavement shall be saw cut and replaced in accordance with Section 10. The walls of the sewer trench shall be vertical in the region between the bottom of the trench and the top of the sewer pipe. In this region, at least six (6) inches but not more than twelve (12) inches of clearance shall be maintained between the outer wall of the pipe barrel and the embankment or shoring, unless otherwise approved by the Engineer.

The trench shall be excavated to a level section and to such elevation as will give a uniform bearing and true flow line elevation when the sewer pipe is laid. All loose dirt in the bottom of the trench must be removed.

A. MUD OR OTHER SOFT OR SPONGY MATERIAL

Where mud or other soft or spongy material incapable of proper pipe support is encountered, it shall be excavated to a minimum depth of twelve (12) inches below sewer subgrade. Limits of the material to be removed shall be designated by the Engineer in the field. However, this does not relieve the Contractor of the requirements of these Specifications, including, but not limited to, allowable deviation of alignment and grade.

B. ROCK

Where rock is encountered, the trench shall be excavated to a minimum depth of three (3) inches below the sewer subgrade and backfilled to sewer subgrade with Type "B" Import, thoroughly compacted to grade before the sewer pipe is laid.

C. OVER EXCAVATED AREAS

Over excavated areas in the trench bottom where "Type B" Import bedding will be placed, shall be restored to sewer subgrade with "Type B" Import, thoroughly compacted before the sewer pipe is laid. (Exception to this requirement is for private sewer lateral trenches in unpaved private property from the property line to the building, where gravel, crushed rock or sand may be placed).

D. COMPACTION

In all the above situations, the compaction shall be achieved by mechanical means. Water settling, flooding, jetting, and other water consolidation methods are expressly prohibited.

E. BRACING AND SHORING

The contractor shall at all times furnish, install, and maintain sufficient bracing and shoring in trenches to insure safety of the workmen and to protect and facilitate the work. When practical, all such bracing and shoring shall be removed from the trench as the backfilling proceeds.

F. BLASTING

In the event that blasting is necessary in excavation, special permission, in writing, must be obtained from the Agency having jurisdiction over the issuance of blasting permits before any blasting will be permitted. Such permission shall in no way relieve the Contractor of the responsibility for obtaining any permits or licenses required by State Law or Local Ordinance.

G. SEWER SUBGRADE

The sewer subgrade shall be kept dry at all times and precautions shall be taken that no storm water is allowed to enter the excavation prior to backfilling. The Contractor shall, at all times, have on the job, sufficient pumping machinery for immediate use. Water shall be disposed of in accordance with the requirements of the city having local jurisdiction, and in such a manner as to cause no damage to public health or safety, or to public or private property.

H. EXCAVATION MATERIAL

Material excavated in streets and roadways and required for backfill, shall be laid alongside the trench and kept trimmed up so as to cause as little inconvenience as possible to public travel.

Free access must be provided to all fire hydrants, water gates, meters and private drives, and means shall be provided so that water can flow in the gutters uninterruptedly.

All materials excavated in streets and roadways and not required for backfill, shall be immediately removed and properly disposed of by the Contractor. No surplus material shall be disposed on private property.

I. OPEN TRENCH PERMITTED

The Engineer will specify the amount of open trench permitted at any one time. In general, the length of trench open at any time shall be limited to 100 feet in business areas; 250 feet or one block (whichever is less) in residential areas; and 1,000 feet in undeveloped areas.

No trench shall be allowed to remain open outside of work hours. At the end of a work day the trench shall be backfilled or secured with steel plates.

J. CONTRACTORS RESPONSIBILITY

It shall be the responsibility of the Contractor to conform to all the requirements of all permits obtained from all Agencies and to make the construction site safe against injury to people and/or livestock by erection of adequate posted barricades and/or temporary fences.

K. GROUNDWATER

The Contractor shall keep excavations free from water during construction. Groundwater shall be controlled to prevent softening of the bottom of excavations, or formation of "quick" conditions. The static water level shall be drawn down to a sufficient depth below the bottom of excavations to maintain the undisturbed state of natural soils and allow the placement of any fill to the specified density. Dewatering systems shall not remove natural soils. The Contractor shall control surface runoff to prevent entry or collection of water in excavations.

The Contractor shall obtain any and all permits required in conjunction with the installation and removal of the dewatering system and shall meet all permit requirements.

The Contractor shall contact the local drainage authority for discharge requirements. The Contractor shall dispose of water from dewatering operations so as not to cause injury or damage to adjacent property and shall at all times remain in compliance with the requirements of the local drainage authority.

SECTION 9 - TRENCH BACKFILLING

9.01 TRENCH BACKFILLING

Trench backfilling shall consist of all materials placed in an excavation in the process of constructing a sewer line and/or appurtenances. No backfill shall be deposited over a sewer line and/or appurtenances until pipe laid has been inspected and approved by the District for backfilling operations.

9.02 PIPE FOUNDATION - (IF REQUIRED BY ENGINEER)

Pipe foundation shall be that portion of the trench which is nine (9) inches below the sewer subgrade. This portion of the trench shall be backfilled with "Rock Ballast" thoroughly compacted to achieve a firm, dry bed for the sewer pipe or structure. Locations of the "Rock Ballast" will be designated by the Engineer in the field. However, this does not relieve the Contractor of the requirements of these Specifications, including, but not limited to, allowable deviation of alignment and grade. Rock ballast shall be wrapped in non-woven geotextile fabric composed of polypropylene. The fabric shall be consistent with the physical characteristics of Mirafi: 140N, or approved equal.

A. ROCK BALLAST:

Rock Ballast shall be 1 1/2 by 3/4-inch gravel conforming to the following gradation.

Sieve Size	Percent Passing (by weight)
2-inch	100
1-1/2-inch	95-100
3/4-inch	5-30
3/8-inch	5-20
No. 200	0-4

9.03 GEOTEXTILE FILTER FABRIC

If required by the Engineer, geotextile filter fabric shall be used to wrap pipe foundation and pipe embedment as specified herein and as indicated on the Standard Details. The requirement for geotextile filter fabric may vary depending on groundwater and soil conditions.

Geotextile filter fabric shall be a non-woven material consisting of polyester, nylon, polypropylene filaments formed into a stable network. The fabric shall be permeable, not act as a wicking agent, be inert to commonly encountered chemicals, be rot-proof, and resistant to ultraviolet light.

The geotextile fabric shall also conform to the following physical properties:

Property	Test Value	Test Method
Weight	5.4 oz/yd^2 (min.)	ASTM D3776/D5261
Grab tensile strength	150 lb (min.)	ASTM D4632
Elongation at break	50% (max.)	ASTM D4632
CBR Puncture	410 lb (min.)	ASTM D6241
Apparent opening size	#70 (max.)	ASTM D4751
Permittivity	1.0 sec-1 (min.)	ASTM D4491
UV resistance	70% (min.)	ASTM D4355

The geotextile fabric shall be Mirafi 160N, Linq Industrial Fabrics 150 EX, or equal.

9.04 PIPE EMBEDMENT

Pipe embedment shall mean that portion of the material placed within the trench from the sewer subgrade to a point at least six (6) inches, but no more than twelve (12) inches above the outside top of the pipe. "Sewer Subgrade" is defined in Section 2.

A. PIPE EMBEDMENT MATERIAL

1. IMPORT "TYPE A"

Shall be creek or bank gravel, crushed gravel, crushed rock, bank run rock or a mixture of these materials.

The material shall be free from roots, vegetable matter, or other deleterious substance and shall be of such nature and so graded that it will bind readily when watered and compacted to the requirement specified herein.

When tested in accordance with Section 6 of Caltrans, State Standard Specifications, the material shall meet the following requirements:

a. The material shall be of such size that the percentage composition by weight, as determined by laboratory sieves, will conform to the following grading:

Sieve Size	Percent Passing (by weight)
1-inch	100
3/4-inch	90-100
No. 4	35-100
No. 30	10-30
No. 200	2-9

b. The material shall also have a minimum sand equivalent of 22 and a minimum resistance (R) value of 78.

c. Reclaimed or recycled material is not acceptable, unless pre-approved by the District Engineer.

2. IMPORT "TYPE B"

"Type B" Import shall be crushed rock (chips). This material shall contain at least 75% of the particles having one or more fractured faces. Not over 25% shall be pieces that show no such faces resulting from crushing. Rock will be designated by normal size.

When tested in accordance with Section 6 of Caltrans State Standard Specifications, the material shall meet the following requirements:

a. The material shall be of such size that the percentage composition by weight, as determined by laboratory sieves will conform to the following graduations:

Sieve Size	Percent Passing (by weight)
1-inch	100
3/4-inch	90-100
No. 4	0-15
No. 200	0-4

In any of the subsequent sections of these Specifications where "Type B" Import is specified, "Type A" Import may be used if so authorized by the Engineer.

b. Reclaimed or recycled material is not acceptable, unless pre-approved by the District Engineer.

3. TRENCH EXCAVATION MATERIAL

Acceptable trench excavation material shall be that material which is free from vegetable matter and refuse and shall contain no concrete, stones or clods larger than 3/4 inch in diameter and shall contain sufficient fines so that all voids will be filled when compacted.

B. PIPE EMBEDMENT INSTALLATION

1. MAIN AND BUILDING SEWERS IN PUBLIC UTILITY AND U.S.D. EASEMENTS, PUBLIC RIGHT OF WAYS AND PAVED PRIVATE PROPERTY

a. RIGID PIPE

That portion of the pipe embedment from the sewer subgrade to outside bottom of the sewer pipe, shall be "Type B" Import graded so that the pipe can be laid to proper line and grade.

Remainder of embedment to a point at least six (6) inches, but no more than twelve (12) inches above the outside top of the pipe barrel shall be "Imported Material" and unless otherwise required by the Engineer, either Import "Type A", or Import "Type B" may be used.

For building sewers, a transition coupling and cleanout shall be provided and installed at the property line. The transition coupling pipe embedment shall be Type B imported from three inches below the outside bottom of the coupling to a point at least six (6) inches, but no more than twelve (12) inches above the outside top of the coupling.

b. FLEXIBLE PIPE

That portion from the sewer subgrade to the spring line of the pipe shall be "Type B" Import. This Import shall be installed in two (2) stages.

STAGE ONE - Shall be from the sewer subgrade to the outside bottom of the sewer pipe, the import shall be graded so that the pipe can be laid to proper line and grade.

STAGE TWO: - After the pipe has been installed to the proper line and grade, the remaining import shall be installed around the pipe from the outside bottom of the pipe to the spring line.

Remainder of embedment to a point at least six (6) inches, but no more than twelve (12) inches above the outside top of the pipe barrel shall be "Imported Material" and unless otherwise required by the Engineer, either Import "Type A", or Import "Type B" may be used.

For building sewers, a transition coupling and cleanout shall be provided and installed at the property line. The transition coupling pipe embedment shall be Type B imported from three inches below the outside bottom of the coupling to a point at least six (6) inches, but no more than twelve (12) inches above the outside top of the coupling.

2. BUILDING SEWERS IN UNPAVED PRIVATE PROPERTY FROM PROPERTY LINE TO BUILDING

a. RIGID PIPE

That portion of the pipe from the sewer subgrade to outside bottom of the sewer pipe, shall be "Type A" Import, "Type B" Import, or a material approved by the District such as sand or pea gravel, graded so that the pipe can be laid to proper line and grade.

A transition coupling and cleanout shall be provided and installed at the property line. The transition coupling pipe embedment shall be Type B imported from three inches below the outside bottom of the coupling to a point at least six (6) inches, but no more than twelve (12) inches above the outside top of the coupling.

b. FLEXIBLE PIPE

That portion from the sewer subgrade to the spring line of the pipe shall be "Type A " Import, "Type B" Import, or a material approved by the District such as sand or pea gravel. This Import shall be installed in two (2) stages.

STAGE ONE - Shall be from the sewer subgrade to the outside bottom of the sewer pipe, the import shall be graded so that the pipe can be laid to proper line and grade.

STAGE TWO - After the pipe has been installed to the proper line and grade, the remaining import shall be installed around the pipe from the outside bottom of the pipe to the spring line.

Remainder of embedment to a point at least six (6) inches, but no more than twelve (12) inches above the outside top of the pipe barrel shall be "Type A" Import, "Type B" Import, or Trench Excavated material.

A transition coupling and cleanout shall be provided and installed at the property line. The transition coupling pipe embedment shall be Type B imported from three inches below the outside bottom of the coupling to a point at least six (6) inches, but no more than twelve (12) inches above the outside top of the coupling.

9.05 TRENCH BACKFILL MATERIAL

Trench backfill material is considered to be all material placed in the trench between the pipe embedment and the road bed or ground surface. Reclaimed or recycled backfill material is not allowed, unless pre-approved by the District Engineer.

A. BACKFILL IN PUBLIC RIGHTS OF WAY, UNION SANITARY DISTRICT EASEMENTS, PUBLIC UTILITY EASEMENTS, OR IN EXISTING OR FUTURE PAVED AREAS

The material, placement and compaction shall be done in accordance with the requirements and inspection of the City having jurisdiction there over. Backfill shall be compacted to a minimum 95% Relative Compaction per ASTM D-1557.

B. BACKFILL IN EXISTING AND FUTURE UNPAVED PRIVATE PROPERTY AREAS

The material placed must meet the following requirements:

1. NATIVE BACKFILL

Unless otherwise shown on the Project Plans or Specifications or otherwise required by the Engineer, "Native Backfill" may be used provided that it is free from vegetable matter and refuse and shall contain no concrete, stones or clods larger than four (4) inches in diameter and shall contain sufficient fines so that all voids will be filled when compacted, and shall be so constituted that compaction requirements can be met.

It shall be compacted to the same degree of compaction as the adjacent ground or a minimum of 85% Relative Compaction per ASTM D-1557, whichever is greater.

2. IMPORTED BACKFILL

In areas where the excavated material does not meet the requirements for "Native Backfill", then material meeting the requirements for Import "Type A", or "Trench Excavated Material" under Section 9.04 may be used. It shall be compacted to the same degree of compaction as the adjacent ground or a minimum of 85% Relative Compaction, whichever is greater.

C. COMPACTION

The method the Contractor uses to meet compaction requirements is not specified except for the following limitations.

1. Compaction shall be achieved by mechanical means. Water settling, jetting, ponding, and other water compaction methods are prohibited. Compaction testing shall be done in accordance with the requirements of the city or other agency having jurisdiction.
2. For sloped trenches, or when heavy-impact compaction equipment is used, such as sheep-foot wheels and self-propelled compactors, The Contractor shall protect the pipe from being damaged during mechanical compaction. To provide this protection, the pipe shall be covered with a minimum of 30 inches of Type "A" import at the time of installation. The remainder of the backfill shall be in accordance with the requirements of the City or other Agency having jurisdiction.

SECTION 10 - PAVING REPLACEMENT

10.01 DEFINITION

Paving shall mean that portion of the material in the trench, from the top of the backfill to the surface of the ground. It includes all lime or cement treated base material, rock, aggregate base, and surface pavement material.

10.02 PAVING IN PUBLIC RIGHTS-OF-WAY OR PUBLIC UTILITY EASEMENT

Paving in these areas shall be done in accordance with the requirements of the City or other Agency having jurisdiction there over.

10.03 PAVING IN UNION SANITARY DISTRICT EASEMENTS AND IN PRIVATE PROPERTY

Paving shall be replaced in kind unless otherwise shown on Plans or required by the Engineer.

All existing pavement at trench edges shall be saw cut to sound pavement and the exposed surfaces coated with tack coat applied in accordance with Caltrans Standard Specification 39-4.02 just prior to paving.

The pavement shall in all cases be removed to a minimum of three (3) inches outside of the excavation to permit proper keying of the restored pavement.

SECTION 11 - MISCELLANEOUS REQUIREMENTS

11.01 INSPECTION

A. CONFORMANCE TO THESE SPECIFICATIONS

All work done under these specifications shall be subject to rigid inspection and shall be performed to the satisfaction of the Engineer.

B. DOCUMENTS OF MATERIALS AND PERFORMANCE TESTS

The Contractor shall, at any time when requested by the Engineer, submit at his/her expense, properly authenticated documents of materials and performance tests as proof to the District of compliance with these Specifications.

C. ACCESS TO JOB SITE

The Engineer shall, at all times, have access to the work during construction, and the Contractor shall provide proper and safe facilities for such access and inspection.

11.02 ALTERATIONS

The Engineer reserves the right to increase or decrease the quantity of any item or portion of the work, and to make such alterations or deviations, additions or omissions from the approved Plans as may be determined during the progress of the work to be necessary and advisable for the proper completion thereof.

11.03 DEFECTIVE WORK AND/OR MATERIALS

All work which has been rejected shall be remedied, or removed and replaced by the Contractor in an acceptable manner.

All materials not conforming to these Specifications shall be considered as defective and all such materials, whether in place or not, will be rejected. They shall be removed immediately from the site of the work.

11.04 MANHOLE PROTECTION

Particular care must be taken to protect new and existing manholes from damage and to keep rock, dirt or debris from getting into the sewer.

On new manholes, or manholes that have had frame and cover removed, a steel cover of adequate strength, close fitted and well secured, shall be installed over the manhole opening until the frame and cover are permanently installed.

Ground or surface water must be kept out of existing sewers. Temporary plugs may be required by the Engineer to effect this protection.

When so indicated on the Plans or required by the Engineer, manholes in unpaved areas subject to future development will be protected by installation of a 3/4-inch plywood cover installed directly on the manhole block. This cover will be close fitting (cut in two (2) pieces to facilitate installation down the manhole neck) and installed immediately after final inspection by the Engineer.

11.05 USE OF EXISTING BUILDING SEWERS

Existing building sewers disconnected from buildings that have been demolished, or moved, may be used for new buildings only when found by the Engineer to be in conformity with these Specifications.

Full bore rodding and television inspection of the building sewer will be required as part of the review process.

11.06 BUILDING SEWER MARKING

Each building sewer shall be marked at the location where it passes under the property curb in the following manner:

A. NEW CURB

Where new curbs are constructed, a two (2) inch high letter "S" shall be impressed with an approved stamp into the fresh concrete on the curb so as to be clearly visible.

B. EXISTING CURBS

Where curbs already exist, a two (2) inch high letter "S" shall be neatly chiseled on the curb so as to be clearly visible.

11.07 MANHOLE MARKING

If deemed necessary by the Engineer, manholes located in easements will be marked with a District Marker. Marker will be supplied and installed by District Forces (at others expense.)

11.08 REPAIR OF DAMAGED SEWERS AND OTHER UTILITIES

A. NEW MAIN AND/OR BUILDING SEWERS

Main and/or building sewers not yet accepted by the District that are damaged during construction will be repaired by the Sewer Contractor in accordance with these Specifications and Standard Details. The work shall be done in the presence of and to the satisfaction of the Engineer. The portion of the pipe bedding from sewer subgrade to outside bottom of sewer pipe shall be satisfactorily installed before the pipe is laid.

B. EXISTING MAIN SEWER OR APPURTENANCES

Repairs or relocations of existing main sewers or appurtenances required by reason of damage, or conflict, will be performed by the District or by Contractors engaged by the District through a Contract or Encroachment Agreement.

Before any such work is started by District Forces, a standard District "Work Order" must be signed by the party or his/her agent, responsible for payment, authorizing the work by District Forces and agreeing to pay charges incurred. Upon completion of the work, the District will bill the party responsible for payment thereof.

C. EXISTING BUILDING SEWERS

Except as noted below or otherwise agreed to by the District, all work involving repair or relocation of existing building sewers shall be done by private Contractors. Permit requirements per Ordinance 34 Series must be met in order for a construction permit to be issued prior to the start of work. All work must be done per District Specifications and subject to District Inspection.

If such work is to be done by District Forces, a standard District "Work Order" must be signed by the party or his/her agent, responsible for payment, authorizing the work by District Forces and agreeing to pay charges incurred. Upon completion of the work, the District will bill the party responsible for payment thereof.

In event repair work is deemed necessary by the District, in its sole discretion, to alleviate a threat to the District's sewer system, and no "Work Order" is signed by the party or agent responsible for payment, or emergency repairs are undertaken by District, no approval and acceptance of construction will be issued by District until the reasonable cost of repairs are paid or arrangements appropriate to District are made for such reimbursement.

D. REPAIR OF OTHER AGENCY FACILITIES

Repair of other Agency utilities damaged during construction shall be made in accordance with the requirements of the Agency concerned.

11.09 CONNECTION OR ADJUSTMENTS TO EXISTING MAIN SEWERS OR APPURTENANCES

Except for work on sewers not yet accepted by the District and work specifically authorized by an Encroachment Agreement, all work on existing main sewers shall be done by District Forces, including:

A. Splice into Main Sewer (See Section 23.08).

B. Stub into Existing Public Manhole (See Section 22.20)

C. Rechanneling Existing Public Manhole.

D. Installation of Plywood Cover (False Bottom) Over Existing Public Manhole Base Block.

The charge for said work by District Forces is based on the District's current rate schedule. A sewer "work Request Form" signed by the Contractor shall be submitted and the charges as estimated by the District paid prior to issuance of a sewer construction permit. Refunds or additional billing will be made after completion of the work and will be based upon actual costs incurred.

The exact time that the work is to be done by District Forces must be arranged by the Contractor with the District Office (an inspector or an inspection coordinator) at least 48 hours (2 business days) in advance preceding the work day. Messages or voicemails are not acceptable.

Work to be done by District Forces that, due to its' unusual character, is not listed on the rate schedule will be billed after the work is accomplished on the basis of actual costs. Before any such work is started by District Forces, a standard District "Work Order" must be signed by the party responsible for payment, authorizing the work by District Forces.

All work done by District Forces must be paid, or appropriate arrangements satisfactory to District made, prior to District accepting construction and reporting acceptance and approval to the Governing Municipality.

11.10 ABANDONMENTS

Abandonment of existing District facilities shall be performed by Contractors engaged by the District through a Contract or Encroachment Agreement.

A. MAIN SEWERS

Main sewer pipe that is required to be abandoned shall be abandoned by one of the following methods:

1. Filling with slurry or cellular concrete. Slurry shall be a flowable mix containing a minimum of 1 sack cement, maximum of 1-1/2 sack cement per cubic yard.

2. Removing the existing pipe.

B. BUILDING SEWER

When an existing building sewer will no longer be in service, such as when a building is demolished, the building sewer shall be located and capped with an approved coupling and a

watertight cap as close to the main as possible but in no case further from the main than property line. This work requires a USD permit and shall be done in the presence of and to the satisfaction of the Engineer.

C. MANHOLE

Remove the castings, manhole body, and base block to a minimum of five (5) feet below final street grade or existing ground elevation, whichever is lower. The castings shall be delivered to Union Sanitary District, 5072 Benson Road, Union City, California 94587.

The manhole channel shall be sealed to a watertight condition with concrete. The manhole shall then be filled and compacted with self-compacting material as approved by the Engineer and City jurisdiction.

D. SEPTIC TANK

Every cesspool, septic tank, and seepage pit which has been abandoned or has been otherwise discontinued from further use, or to which no waste or soil pipe from a plumbing fixture is connected, shall have the sewage removed and be completely filled with earth, sand, gravel, concrete or other approved material.

The top cover or arch over the cesspool, septic tank or seepage pit shall be removed before filling and the filling shall not extend above the top of the vertical portions of the sidewalls or above the level of any outlet pipe until it has been inspected. After such inspection, the cesspool, septic tank or seepage pit shall be filled to the level of the top of the ground.

SECTION 12 - TESTING

12.01 TESTING MAIN SEWERS

The Contractor shall, in the presence and under the direction of the Engineer, test the water tightness of all main sewer lines. The test will be made between each adjacent structure and between the most upstream structure and dead-end. The test will be made only after all other utilities and the curb and gutter have been installed and before any street base rock has been oiled. All gravity sewer pipes shall be tested for exfiltration and/or infiltration and deflection, as specified.

A. LEAKAGE TESTS

The Contractor may test using either the Water Exfiltration Test or the Air Test as described below. Due to the safety concerns when air testing large-diameter sewers, it is recommended (not required) that sewer mains larger than 15 inches be tested using Water Exfiltration Test.

B. WHEN TESTED

1. In areas to be left unpaved, the air test shall be made after the backfill is satisfactorily compacted.
2. In areas to be paved, per Improvement Plans, when the outside top of the sewer is less than three (3) feet below the top of backfill, the air test shall be made after the "base rock" portion of the paving is satisfactorily compacted and final paving has been installed.

The test as noted in 1 or 2 above is considered the "official test". However, preliminary testing is strongly recommended and may be conducted by the Contractor at any time prior to the "official test".

C. EQUIPMENT

The Contractor shall furnish all necessary equipment, including but not limited to: an air compressor, air hoses, test water, blank plug, test gauge, test plug, standpipe, stopwatch, and personnel for conducting the test.

D. AIR TEST PROCEDURE

1. Air shall be slowly fed into the plugged pipe until the internal air pressure reaches 4.0 pounds per square inch greater than the average back pressure of any groundwater that may submerge the pipe.
2. At least two minutes shall be allowed for temperature stabilization before proceeding further.
3. The rate of air loss shall then be determined by measuring the time interval required for the internal pressure to decrease from 3.5 to 2.5 pounds per square inch greater than the average back pressure of any groundwater that may submerge the pipe.
4. Air testing sewer mains, particularly larger diameter mains, can be very dangerous due to the very large forces developed. The Contractor shall be fully responsible and take all precautions necessary to ensure the safety of their workers. All plugs shall be adequately braced to support the full load developed. No workers shall be allowed in the excavation or manhole while the line is under pressure. The Contractor shall make provisions for reading the pressure at the ground surface and for safely releasing the air pressure without entering the manhole or excavation.

E. AIR TEST REQUIREMENTS

1. The pipeline shall be considered acceptable, when the total time interval for the pressure drop from 3.5 to 2.5 pounds per square inch meets or exceeds the calculated test time based on the following table. This table is based on a rate of 0.0015 cubic feet per minute per square foot of internal pipe surface when tested per ASTM F-1417. At the Inspector's option, the test may be conducted for a pressure drop of 3.5 to 3.0 pounds per square inch and 1/2 of the time shown.

Minimum Test Time for 1 PSI Pressure Drop

Pipe Diameter, inches	Test Time, seconds/ft x feet	Minimum Test Time, minutes:seconds
4	0.38	3:46
6	0.85	5:40
8	1.52	7:34
10	2.37	9:26
12	3.42	11:20
15	5.34	14:10
18	7.69	17:00
21	10.47	19:50
24	13.67	22:40
27	17.31	25:30
30	21.37	28.20
33	25.85	31.10
36	30.77	34:00

2. If the pipe installation fails to meet these air test requirements, the Contractor shall determine the source or sources of leakage, and he shall repair or replace all defective materials or workmanship in accordance with these Specifications and in the presence of the Engineer. The completed pipe installation shall meet the requirements of this test.

F. WATER EXFILTRATION TEST REQUIREMENTS

1. After pipe installation and cleaning, the section of pipeline to be tested shall be prepared for testing by plugging the upper side of the downstream manhole and all openings in the upstream manhole except the downstream opening.
   a. Where manholes are widely spaced, sections may be tested by blocking upstream end of pipe.
   b. Where grades are slight, two or more sections between manholes may be tested at once.
2. A section of pipe prepared as above shall be tested by filling with water to an elevation 5 feet above the top pipe at the upstream end of the test section, or 5 feet above the existing groundwater elevation, whichever is greater.
   a. Where required due to high groundwater levels, Contractor shall provide standpipe to allow for the required testing head.
   b. The testing head may be above the ground surface in some cases.
   c. The water shall be introduced into the test section at least 24 hours in advance of the test period to allow the pipe and joint material to become saturated.

d. The loss in water may be determined by measuring additions of water required to maintain the specified head or by measuring the rate of fall of water level, but the level shall not be allowed to fall more than 1 foot below the initial elevation.

3. Should the initial test show excess leakage in a section of pipe, it is permissible to draw the water off and test the manholes that contained water.

   a. This test shall be made by plugging all the openings in the manholes and filling with water to the same elevation as existed during the test.

   b. The leakage from the manhole may be deducted from the total leakage of the test section in calculating the pipe leakage.

4. The water level shall be maintained for not less than 2 hours. Leakage shall not exceed 50 gallons per inch of diameter per mile of pipe for 24 hours. All expense of testing shall be borne by the Contractor.

G. LEAKAGE TEST ACCEPTANCE

1. Where the actual leakage exceeds the allowable, the Contractor shall determine the cause and remedy it before the pipeline is accepted.

2. For the purpose of this subarticle, a section of pipeline is defined as the length of pipe between successive manholes or special structures.

3. The Contractor shall correct any visible leaks in the pipeline, manholes, and special structures.

4. The Contractor shall dispose of all water so as not to cause a public nuisance and as approved by the Engineer.

H. MANDREL OR DEFLECTOMETER TEST

Mandrel test for flexible pipes shall also meet the requirements specified in Section 5.02.B.6.

1. FLEXIBLE PIPE LESS THAN 18" IN DIAMETER

   Upon completion of the air test and before final paving is installed, the Contractor shall pull a mandrel or deflectometer, approved by the Engineer, through the installed flexible pipe. This test shall be performed without mechanical pulling devices. Mandrel shall not be tampered with.

2. FLEXIBLE PIPE 18" OR GREATER IN DIAMETER

   At the end of each working day, or as directed by the Engineer, the Contractor shall pull an approved Mandrel or Deflectometer through the portion of the pipe specified by the Engineer. This section of pipe will have pipe embedment fully in place and compacted per these specifications plus at least four feet of backfill in place with a minimum of 85% relative compaction per ASTM D-1557. This shall be a preliminary test only to insure the integrity of the pipe at the time of installation. The Mandrel test for acceptance shall be performed after the air test as described in Section 12.01.D, but before final paving is installed.

12.02 TESTING BUILDING SEWERS

The Contractor shall, in the presence and under the direction of the Engineer, test the air-tightness of all building sewer lines. The test will be made between the cleanout to grade at the property line, "test-wye" or manhole and the most upstream dead-end at a point not more than five (5) feet outside the building line (See A-2 below for exception). Note that actual connection of the building sewer to the building plumbing will not be permitted until the main sewer to which it connects has been accepted for use by the District and the herein described testing has been satisfactorily completed. Entry into “live” District manholes requires an Encroachment Agreement from the District.

A. WHEN TESTED

1. In all areas, the official air test shall be made after the backfill is satisfactorily compacted, base rock installed and all other underground utilities, private and public, installed.

   Preliminary air testing is strongly recommended and may be conducted by the Contractor at any time prior to the "official test".

2. Exception to 1 above is when a water test is authorized by indication on the Plans or as directed by the Engineer in the field. In these cases, the following procedure will be used: After the building sewer has been laid, and the pipe bedding installed to the satisfaction of the Engineer, the sewer shall be filled with water in the presence of the Engineer. Any and all leaks shall be found and repaired by the Contractor in accordance with these Specifications, after which the sewer trench shall be immediately backfilled.

B. EQUIPMENT

Same as for main sewers

C. PROCEDURE

Same as for main sewers

D. REQUIREMENTS

Same as for main sewers

E. MANDREL OR DEFLECTOMETER

Upon completion of the air test, the Contractor shall pull a mandrel or deflectometer approved by the Engineer between manholes on sewer lines six (6) inches in diameter and larger. This test shall be performed without mechanical pulling devices,

12.03 TESTING PRESSURE SEWERS

This section is intended to be used for small diameter private pressure sewers 4 inches in diameter or less with normal operating pressures of 10 psi or less. The same procedure as described in "Testing Main Sewers" shall be used except that no air loss will be permitted in time period computed for a gravity sewer of same size and length.

The pressure used will be determined by the Engineer and will be equal to 1 1/2 times the maximum pressure the sewer will be expected to withstand in actual use.

12.04 MANHOLE VACUUM TESTING

All manholes shall be vacuum tested. Vacuum test procedures and requirements shall be as follows:

1. After completion of the manhole barrels but prior to backfilling, sealing of PVC liner seams and installing grade rings, all openings in the manholes are sealed with plugs and a rubber ring “donut” type plug inserted inside the opening of the cone.
2. A small vacuum pump is attached to a hose connected to the plug and 4 psi (8 in. Hg) of vacuum applied.
3. The vacuum is permitted to stabilize at 3.5 psi (7 in. Hg) for 1 minute; then the test is begun.
4. The manhole must maintain vacuum such that no greater than 0.5 psi (1 in. Hg) of vacuum is lost during the specified test period. The specified test period is as follows:

Manhole depth, feet	Test period, minutes
0-5	4.5
5-10	5.5
10-15	6.0
Greater than 15	6.5

5. Manholes that fail the test shall be corrected as required and retested.
6. A vacuum regulator shall be provided on the vacuum pump such that no greater than 10 psi (20 in. Hg) can be applied to the manhole during the test. All manholes that do not meet the leakage test, or are unsatisfactory from visual inspection, shall be repaired to the satisfaction of the Engineer.

SECTION 13 - TELEVISION INSPECTION

13.01 INSPECTION OF MAIN SEWERS

Television inspection of sewer mains is required to be inspected with District television equipment operated by District Forces. The cost of initial television inspection is considered to be included in the permit fees. Any subsequent reinspection shall be at the cost of the permit holder.

13.02 WHEN TESTED

After final air testing and mandrel testing in conformance with Section 12.

Any portion of the sewer found not to be in conformance with these Specifications must be corrected by the Contractor. Sewers so corrected shall be re-tested and inspected in accordance with the requirements of these Specifications.

SECTION 14 - CLEANING

14.01 CLEANING

After the sewers have satisfactorily passed the tests required in Section 12, structures, backfilling and final paving are completed, the Contractor, in the presence of the Engineer, shall clean each section of the sewer in the following manner:

A. SEWERS EIGHT (8) INCHES THROUGH TWELVE (12) INCHES IN DIAMETER

High pressure hydraulic cleaning or jetting shall be used to remove dirt, grease, rocks, sand, and other materials or obstructions from the sewer line and manholes. District may clean the sewer in these sizes at Contractor's request and at his/her expense.

Sludge, dirt, sand, rocks, grease, and other solid or semi-solid material resulting from the cleaning operation shall be removed at the downstream manhole of the section being cleaned. Passing materials to downstream sewer reaches is not permitted.

The "Wayne Ball" or "ball and flush" method may be allowed with prior approval from the District Engineer.

B. SEWERS FIFTEEN (15) INCHES IN DIAMETER AND LARGER

The Engineer shall visually inspect the sewer and if in his/her opinion cleaning is necessary, the Contractor shall clean the sewer to the satisfaction of the Engineer. District may clean the sewer in these sizes at Contractor's request and at his/her expense. Clean sewer main as described in Paragraph A.

C. FOUR (4) INCH AND SIX (6) INCH BUILDING SEWERS

When in the opinion of the Engineer, the sewer is not clean it shall be flushed or otherwise cleaned so as to properly serve its intended function. Clean building sewer as described in Paragraph A.

14.02 DISCHARGE OF CLEANING WATER

Water used for cleaning the lines shall be screened to remove sediments prior to being discharged into the existing sewer system.

SECTION 15 - SITE CLEANUP AND RESTORATION

15.01 SITE CLEANUP AND RESTORATION

Surplus pipeline material, tools, remaining material from site preparation, etc., shall be removed by the Contractor, and all dirt, broken pavement, rubbish and excess earth from excavation shall be hauled to an approved disposal site provided by the Contractor and the construction site left clean, to the satisfaction of the Engineer.

Replaceable items such as fences, signs, landscaping, etc., requiring removal during construction operations must be replaced in kind by the Contractor at his/her expense or disposed of as noted on the Plans. Any driveway areas or other improvements requiring removal and/or excavation will be restored in accordance with the requirements of the city having local jurisdiction, to a condition equivalent to their original condition, and to the satisfaction of the Engineer.

A. DISTRICT CONTRACT JOBS

1. On District contract jobs, the value of and the responsibility for damage to objects that cannot be replaced in kind must be negotiated between the Contractor and the District before the removal of those objects.

B. DRIVEWAY REPAIRS

1. City of Fremont – No. 3 Rebar, 12 inches long shall be placed at 2 foot on center, a minimum of 3 inches into existing concrete. Epoxy grout if drilled.
2. City of Newark – No. 4 rebar, 24 inches long shall be placed at 4 foot on center.
3. City of Union City
   a. Residential Driveways – No. 4 rebar, 12 inches long at 4 foot on center.
   b. Commercial and Industrial Driveways – No. 3 rebar, 12 inches long at 4 foot on center.

SECTION 16 - REQUIREMENTS FOR ISSUANCE OF SEWER CONSTRUCTION PERMITS

16.01 PROPERTY TO BE SERVED BY USD

All property to be served must be within the District boundaries.

16.02 INSURANCE REQUIREMENTS

All main sewer and building sewer work in the District shall be performed by Contractor with current Worker's Compensation and Public Liability insurance.

16.03 LICENSE REQUIREMENTS

All Main Sewer and Building Sewer work in the District shall be performed by Contractors licensed by the State of California to perform such work except as noted in 16.03 B below. The Contractor will be required to sign necessary District forms prior to being issued a sewer construction permit.

16.04 BOND/DEPOSIT REQUIREMENTS

A. MAIN SEWER WORK

For construction, repairing or altering a "Main Sewer", a Surety Bond in a sum equal to 100% of the estimated cost of the work, guaranteeing the faithful performance of the work in accordance with the ordinances and rules and regulations of the District, including making good any defects through faulty, improper or inferior workmanship or materials arising or discovered within one (1) year after the completion of said work and acceptance thereof by the District. However, if the City or municipality within which such work is to be performed requires the filing of a Faithful Performance Bond guaranteeing making good defects through faulty, improper or inferior workmanship or materials arising or discovered within one (1) year after completion and acceptance of said work, no such bond will be required to be filed with the District.

B. BUILDING SEWER WORK BY CONTRACTOR OR OWNER

An individual or a contractor may apply for a permit for the installation or repair of a portion of a building sewer which is on private property by posting a cash deposit with the District, in accordance with the provisions of District Ordinance No. 34 or subsequent amendments thereto. The cash deposit will be refunded within 60 days of approval of work by the District.

C. PERMIT HOLDER DEPOSIT

A cash deposit will be required form the person(s) or Contractor(s) performing sewer work for possible damage to District and private facilities and additional expense for correcting poor or improper workmanship and materials. Within 60 days after final approval of the sewer per Section 20 herein, this deposit will be refunded.

D. DEVELOPER DEPOSIT

A cash deposit per "Cleanout to Grade" or "Control Manhole" may be required from the Developer prior to issuance of a sewer construction permit. District construction unit prices are used for determination of deposit. Within 60 days after final approval of the sewer per Section 20 herein, this deposit will be refunded.

16.05 FEES AND CHARGES

All fees and charges levied by the District are payable before issuance of a sewer construction permit unless otherwise noted herein. Except for any special fees or charges, all types are noted below:

A. ANNEXATION FEE

Process Application Fees and Annexation Fees are payable by all Developers or Property Owners for land not within the District boundaries per current District Ordinance No. 20 and 25 series.

The Process Application Fee and the First Installment of the Annexation Fee is due and payable upon request for annexation. The request must be signed by the Owner of the property and be accompanied by a copy of the Title Report and a location drawing of the property to be annexed.

The applicant is required to provide, at his/her expense, all necessary maps and descriptions required for approval by the Local Agency Formation Commission along with digital copies of all maps and descriptions in accordance with Section 16.09, Minimum Requirements for Digital Submittal. These documents are submitted to the District for transmittal to Alameda County for review and ultimately to the Commission for their review and approval.

A building sewer construction permit may not be issued, or construction work may not be accepted, until the property is annexed to the District. The annexation process may take up to 6 months or longer.

B. DOCUMENT REVIEW FEE

Per current District Ordinance No. 34 Series. Payable for the review of documents such as an easement or an encroachment agreement.

C. STUDY FEE

Per current District Ordinance No. 34 Series. Payable for the costs of a study of the effects of the proposed development.

D. PLAN REVIEW FEE

Plan review fees are payable by all Developers per current District Ordinance No. 34 Series. District construction unit prices are used in the computation.

E. INSPECTION FEE

Inspection fees are payable by all Developers and/or permit holders per current District Ordinance No. 34 Series. District construction unit prices are used in the computation.

F. CAPACITY CHARGES

Capacity charges are payable by all Developers and/or Owners per current District Ordinance No. 35 Series.

G. FRONTAGE FEE

Frontage fees are payable by all Developers proposing to connect directly to District financed main sewers per current District Ordinance No. 30 Series.

H. MATERIALS AND SERVICE FEE

Those fees, per current District Ordinance No. 34 Series, that are payable to the District for materials furnished by the District and work done by District Forces in accordance with the construction requirements as shown on approved Plans and in the Standard Specifications. (See Section 18.02 herein).

I. REIMBURSEMENT FEE

Reimbursement fees are payable by Developers per current District Ordinance No. 9 Series, connecting to the frontage of main sewers installed by others, or tributary to the area, which are subject to reimbursement. Conditions and requirements of specific Reimbursement Agreements may apply.

J. WASTEWATER DISCHARGE PERMIT FEE

Per current District Wastewater Discharge Ordinance No. 36 Series. Payable by users who are required to obtain a Wastewater Discharge Permit for discharge on non-domestic type wastes.

K. FAILURE-TO-OBTAIN-A-PERMIT FEE

Per current District Ordinance No. 34 Series. Payable by the person(s) or Contractor(s) performing sewer work without a valid USD permit.

16.06 SUBMISSION OF DATA FOR MAIN SEWERS

A. PRELIMINARY PLANS

Three (3) sets of Preliminary Improvement Plans, Development Plans and Maps (tract map, parcel map, etc.), prepared by a Registered Civil Engineer in the State of California, must be submitted to the District. Standard size sheet of 22” x 34”, 24" x 36", or 30” x 42” with a scale of 1"=40’ or 1"=50’ and profile to 1"=4’ or 1"=2’ must be used unless otherwise authorized by the Engineer. These will be reviewed by the Engineer and one (1) corrected copy returned to the applicant.

A digital copy of all preliminary plans shall be submitted in one (1) drawing file in accordance with Section 16.09, Minimum Requirements for Digital Submittal.

B. FINAL PLANS

After corrections are made, the original drawing can be signed by the Engineer. After all approving Agencies have signed the Plans, one (1) Plan of the Development drawn to a scale of 1"=100 and two (2) sets of Final Improvement Plans, Development Plans, Final Maps and Certificate Sheet suitable for microfilming must be furnished to the District. Unless otherwise authorized by the Engineer, these signed plans must be submitted to the District prior to issuance of a main sewer construction permit.

A digital copy of all final plans shall be submitted in one (1) drawing file in accordance with Section 16.09, Minimum Requirements for Digital Submittal.

C. ESTIMATE OF THE QUANTITY OF MATERIAL

One (1) copy of the final estimate of the quantities of the materials for the sanitary sewer system shall be submitted to the District prior to the issuance of a main sewer construction permit.

D. EASEMENT REQUIREMENTS

A main sewer authorized by the Engineer to be constructed on private property may require that a Sanitary Sewer Easement be granted to the District. It must be prepared by the Grantor on Standard District Forms properly signed and notarized. The easement must be defined on a Legal Description and Plat prepared by a licensed surveyor, separate from the tract or parcel map. A Title Report shall also be submitted with the easement documentation. A digital copy of the Legal Description and Plat shall be submitted in accordance with Section 16.09, Minimum Requirements for Digital Submittal. After approval by the District, it shall be recorded by the Design Engineer with the Alameda County Recorder. Once it is recorded, a copy of the recorded document will be furnished to the District. This must be accomplished prior to acceptance by the District of the sewer that lies within the easement.

E. QUITCLAIM REQUIREMENTS

When a Sanitary Sewer Easement is to be quitclaimed, a Legal Description and Plat shall be prepared by a licensed surveyor and submitted to the District with a Title Report. After the documents are reviewed and accepted by the District, the District will prepare a Quitclaim Deed and submit it to the Alameda County Recorder. Once it is recorded, a copy of the recorded document will be furnished to the District.

F. FIELD CHANGES

Two (2) sets of Plans and one (1) digital copy in accordance with Section 16.09, Minimum Requirements for Digital Submittal showing field changes proposed must be submitted to the Engineer for approval prior to the work being started.

16.07 SUBMISSION OF DATA FOR BUILDING SEWERS

Submittal requirements for District Plan Check for Building Sewers prior to approval of plans are shown in (A), (B), (C) and (D) below and in Section 16.09 – Minimum Requirements for Digital Submittal. (Does not apply to single family residences unless required by the Engineer).

After plan check is completed by the District, one (1) set of the checked submittals will be returned to the applicant for resubmittal of the required number of revised sets and digital files.

Plan submittals must have information listed below shown on original reproducible tracings to scale with prints submitted there from. Plan must be drawn to adequate scale, with north arrow, on a large enough sheet (11" x 17" min., 30” x 42” max.) and be suitable for microfilming. The minimum scale will be 1"=50’ unless otherwise authorized by the Engineer. Digital files shall be in one (1) drawing file and shall be submitted in accordance with Section 16.09 – Minimum Requirements for Digital Submittal.

Name, address, telephone number and title of company or person preparing the plan must be clearly shown on the submitted plans.

Any office or field change from final approved construction plans must be re-approved by the District and may require resubmittal of revised plans and digital CADD files.

A. SITE PLANS

Four (4) copies of Site Plan plus one (1) copy of the digital CADD file. The Site Plan must show (unless otherwise permitted by the Engineer):

1. Public street and property dimensions.
2. All existing and proposed buildings, labeled with general usage and plotted accurately on site.

3. Areas to be paved and those left unpaved clearly marked.
4. Ground floor and pad elevations of all buildings.
5. Finish ground elevations at key points and curb elevations of public street.
6. Existing ground elevations where cover over proposed sewer is to be less than two (2) feet at time of construction.
7. Existing USD manhole number and rim elevation of nearest existing public sanitary sewer manhole in the street drawn to scale or with its distance shown to the site's nearest downstream property corner and the new sewer connection.
8. Existing and proposed utilities plotted correctly and labeled.
9. The proposed sanitary sewer must be shown with size, material, minimum slope, invert elevation to nearest 0.1 foot at connection to building plumbing (building drain).
10. Show invert elevations at all grade breaks.
11. Show invert elevation of all storm sewers at sanitary sewer crossings.
12. Structures proposed such as cleanouts, manholes (with rim and invert elevations), grease clarifiers, etc., labeled and shown on the plan.
13. Plumbing fixture unit count shown for each building.

B. FLOOR PLANS

Two (2) copies of Floor Plan. (Commercial and Industrial Only). Floor Plan must show area layout and proposed usage of various areas of building.

C. PLUMBING AND / OR MECHANICAL PLANS

Two (2) copies of Plumbing and/or Mechanical Plan. (Commercial and Industrial Only). Plumbing and/or Mechanical Plan must show interior plumbing (building drain) and the fixtures to be served, all properly labeled as to function.

D. CUT SHEETS

Receipt by District of three (3) sets of cut sheets on Standard District Forms prepared by a Registered Civil Engineer or Land Surveyor. Cut Sheets are required per Section 19.02 herein or when so stated by District on approved plans.

E. WASTE DISCHARGE REPORT/PERMIT

One (1) copy of either a Waste Discharge Report or Permit Form as required by the District Pretreatment Ordinance and Technically Based Local Limits (Ordinance No. 36 Series). (Commercial and Industrial Only). After review of these submittals, it may be necessary for the owner or his/her representatives to meet with the Engineer prior to approval of plans.

F. EASEMENT REQUIREMENTS

When a private easement (across adjoining property) is required for installation of a building sewer, a copy of the recorded document must be submitted to the District prior to issuance of a sewer construction permit.

G. CITY BUILDING PERMIT

Prior to issuance of the sewer connection permit, it shall be necessary for the applicant to provide evidence of the necessary Building Permits from the appropriate jurisdiction.

16.08 ENCROACHMENT AGREEMENT

Whenever it will be necessary for workers, material, equipment or excavated trench material to be on real property not included in any deed, grant, easement or the like, an encroachment agreement, license or other permission in writing must be submitted to the District prior to issuance of a sewer construction permit.

16.09 MINIMUM REQUIREMENTS FOR DIGITAL SUBMITTAL

The digital file submitted shall be one (1) drawing file in .dwg format containing all layers, illustrating all improvements within the project area, including all existing and proposed offsite improvements, tract boundary, street centerlines, outfall sewers, etc. in model space. No drawing entities shall be placed on layer "0". Descriptive information (i.e. text) shall not be included in the same layer as the feature, and should be added as a separate layer. Submitted digital files shall be in accordance with the Guidelines for Digital Submittal, or as otherwise approved by USD.

All maps, sanitary sewer easements (except those for private sewer or laterals), annexation maps and associated plans and drawings shall be submitted in digital format. Digital submittals shall be submitted with each plan check submittal and shall conform to the following:

A. <u>FILE FORMAT</u>

1. AutoCAD (DWG)

B. <u>MEDIA DELIVERY OPTIONS</u>

1. Compact Disk (CD)
2. Flash Drive
3. FTP site

C. <u>MISCELLANEOUS</u>

1. Each submittal shall be labeled with the project name and/or map number (tract, parcel map, annexation number, etc.), project number, company name, address and contact phone number.
2. All drawing shall use the California State Plane Coordinate System – Zone III in units of feet. The horizontal datum shall be the North American Datum of 1983 (NAD83) and units of feet and the vertical datum shall be the North Geodetic Vertical Datum of 1929 (NGVD29) in units of feet, or other ties as authorized by USD.
3. Each drawing shall contain at least two survey control points.
4. All drawings shall have a North orientation of vertical (i.e. toward the top of the page).
5. All digital line work must be geometrically correct, without inappropriate breaks. Polygon features drawn as polylines must properly close without gaps.
6. All externally referenced files used shall be "bound" into the drawing file and submitted as one drawing package.
7. Compressed files are acceptable only when using the eTransmit function in the AutoCAD program.

D. <u>LAYERING</u>

1. Layers shall contain, but not be limited to, the layers in the table named AutoCAD Layering Conventions. This table is for reference only and is not to be considered as a complete list of available layer names.
2. Layer colors, line types and line weights shall be left to the discretion of the engineer.

AutoCAD Layering Conventions
For Submission of Developer Projects

Digital files submitted shall be based on accurate coordinate geometry calculations and the NAD83 State Plane Coordinate System (Zone III) and NGVD29. USD requires that the digital file being submitted combines all elements of individual improvement plan sheets for the proposed subdivision along with the elements of the Parcel or Tract Map into a single CAD formatted drawing. This drawing shall contain (but not be limited to) the following layers.

Layer Group	Layer Name	Layer Type	Description
Default	0		AutoCAD default layer
Misc.	BORDER		Contains features such as north arrow, vicinity map, location map, title of plans, signature blocks, standard title block, scale bar, legend, page borders, etc.
Misc.	DETAILS		Standard construction details of jurisdictional agencies.
Misc.	TXT	Text	Layer containing general and construction notes, sheet index, special condition notes, bench mark description, etc.
Landbase	BLDG	Polygon	Building foot prints
Landbase	BLDG - SETBAK	Line	Building setback line
Landbase	BM	Point	Benchmark
Landbase	BNDRY	Polygon	Closed polygon of Tract or Parcel Map boundary
Landbase	CL	Line	Centerline - public streets
Landbase	CLPVT	Line	Centerline - private streets
Landbase	CONTOURS	Polyline	Finished contour lines (grading plans) with elevation attribute (Z value)
Landbase	ELEV	Point	Finished spot elevations (grading plans) with elevation attribute (Z value)
Landbase	EP	Line	Edge of pavement (I.e. lip of gutter or edge of pavement in the case of no curb and gutter construction)
Landbase	ESMT*	Line or Polygon	Easements not related to utilities, such as emergency vehicle access, pedestrian walkways, landscape maintenance, etc.
Landbase	FOC	Line	Face of curb
Landbase	LOT	Text	Text indicating lot number
Landbase	LP	Line	Lip of gutter
Landbase	MON	Point	Survey monuments
Landbase	MONL	Line	Monument line
Landbase	PARCEL	Polygon	Closed polygons of each parcel or lot
Landbase	ROW	Line	Public rights-of-way
Landbase	ROWPVT	Line	Private rights-of-way
Landbase	SL	Point	Street light poles
Landbase	SLCNDT	Line	Street lighting electrical conduit including pull boxes, service meters, etc.
Landbase	STRIPE	Line	Street striping and pavement markings

Layer Group	Layer Name	Layer Type	Description
Landbase	STSIGN	Point	Street/traffic signs
Landbase	SW	Line/Polygon	Sidewalks including handicapped ramps, driveways, back of walk and meandering walks
Landbase	TOPO		All existing topological features (maybe submitted as a separate drawing file)
Landbase	TS	Point	Traffic signal fixtures/poles
Landbase	TSCNDT	Line	Traffic signal conduit including loop detectors, pull boxes, control cabinets etc.
Landscaping	LSIRR	Line	Public landscape irrigation (I.e. landscape maintenance districts) including service line from public main, water meters, valves, backflow and pressure regulating devices, control valves, etc.
Landscaping	LSTREES	Block insert	Street tree plantings that will be maintained by jurisdictional agency
Landscaping	LSPLANT	Block insert	Bushes, shrubs, groundcover and all other organic landscape material
Landscaping	LID	Polygon	Landscape Improvement Dist.
Landscaping	LLD	Polygon	Landscape/Lighting Dist.
Landscaping	LSMOW	Line or Polygon	Concrete mow strips
Misc.	* TXT	Text	Layers containing text associated with various other layers where "?" denotes name of layer (e.g. sanitary sewer text would be named SSTEXT).
Misc.	*TIC	Point	Tics at all beginning and ending curves for all utilities, easement boundaries, street centerlines (public and private), tract or parcel boundary, lot boundaries, etc. where "?" denotes name of feature or utility (e.g. CLTIC, SEE NOTE 1).
Sewer	SS	Line	Sanitary Sewer mains
Sewer	SSLAT	Line	Sanitary Sewer laterals
Sewer	SSMH	Point	Sanitary Sewer manholes
Sewer	SSESMT	Polygon	Sanitary Sewer easements
Stormdrain	SDCI	Block insert	Storm drain curb inlets
Stormdrain	SDESMT	Polygon	Storm drain easements
Stormdrain	SDCMP	Line	Storm drain corrugated metal pipe
Stormdrain	SDDI	Block insert	Storm drain drainage inlet
Stormdrain	SDMH	Block insert	Storm drain manhole
Stormdrain	SD	Line	Storm drain
Stormdrain	SDVLT	Block insert	Storm drain vault
Stormdrain	SDFILT	Point	Storm drain filtering device
Stormdrain	SDMH	Point	Storm drain manholes and/or junction boxes
Utility	ELEC	Line	Electric utility line including power poles, underground conduit, pull boxes, vaults, manholes, ducts banks, etc.

Layer Group	Layer Name	Layer Type	Description
Utility	ESMT*	Polygon	Easements where "?" denotes jurisdiction or purpose (PG&E, PUE, EVAE, etc.). Each utility shall have a separate layer (i.e. ESMTPG&E, ESMTPUE, etc.)
Utility	GAS	Line	Gas utility lines including service lines, valves, etc.
Utility	TELECOM	Line	All telecommunications utilities including (but not limited to) MCI, PacBell, Sprint, GTE, etc. showing location of underground lines, manholes, pullboxes, junction boxes, utility poles, duct banks, etc. Line type shall include name of utility.
Utility	CATV	Line	Television, cable TV showing location of underground lines, manholes, pullboxes, duct banks, utility poles, etc.
Utility	UTILITY	Line	Conduit layout of all utilities not specifically designated in this schema. Each utility shall have a separate layer named for the utility and shall show all appurtenant facilities
Water	W	Line	Water mains
Water	WARV	Point	Air release valve
Water	WBV	Point	Butterfly valve
Water	WBO	Point	Blow off valve
Water	WESMT	Polygon	Waterline easements
Water	WFH	Point	Fire Hydrants
Water	WFHV	Point	Fire Hydrant valves
Water	WSVC	Line	Water service lines
Water	WM	Point	Water meters
Water	WV	Point	Water valves

NOTES:

1. Centerline intersection tics not required on sanitary sewer mains.
2. Names for layers containing existing features shall be prefixed with "EX". For example, the layer containing existing sewer mains shall be named EX SS.
3. Names for layers containing easements other than water, sewer and storm drain shall be prefixed with "ESMT". For example, the layer containing Emergency Vehicle Access Easements shall be named "ESMT EVAC".
4. Name for layers containing temporary improvements or structures shall be prefixed with "TEMP" according to the type of improvement or structure. For example, the layer containing future curb would be named "TEMP FOC".
5. Any repeatable feature such as sewer manholes, storm drain manholes, streetlight poles, tress, bushes, etc. may be designated with an appropriate symbol or AutoCAD block.

SECTION 17 - GREASE AND OIL COLLECTION SYSTEMS AND ADDITIONAL CONNECTION REQUIREMENTS

17.01 GENERAL

For the purpose of this specification section, a Food Service Establishment is any establishment primarily engaged in activities of food preparation, food service, or the making available for consumption foodstuffs and that use one or more of the following preparation methods: cooking by frying (all methods), baking (all methods), grilling, sautéing, rotisserie cooking, broiling, smoking (all methods), boiling, blanching, roasting, toasting, or poaching. Also included are infrared heating, searing, barbecuing, and any other food preparation activity that produces a heated food product, whether served on or in washable and reusable plates or containers or those of a disposable type. Food Service Establishments include those establishments or facilities where foodstuffs are served or prepared for consumption or sale. This includes but is not limited to cold dairy and frozen foodstuffs preparation and serving establishments that prepare or serve drinkable or edible products.

All Food Service Establishments shall be equipped with grease interceptors and/or grease traps designed to limit the discharge of grease and oil to the District's sewer system as required in Union sanitary District Ordinance 38. The size and type of Food Service Establishment shall dictate the size of the grease trap or grease interceptor required. The minimum sizes specified are subject to review and approval by the District Engineer.

17.02 GREASE INTERCEPTORS

Most establishments shall have an outside grease interceptor installed with the minimum liquid capacity of 1500 gallons.

Designation as a grease intensive Food Service Establishment shall be as determined by the District Engineer. In given situations, or applications, the next larger size may be required due to the nature of the usage. Grease interceptors shall be two compartment interceptors as shown in the Standard Details and shall be manufactured by Jensen Precast, or approved equal.

17.03 GREASE TRAPS

Non-grease intensive Food Service Establishments shall typically include delicatessens, bakeries/donut shops, ice cream/frozen yogurt shops, pizzerias and other Food Service Establishments with limited cooking that do not contain deep fryers, grills or other cooking equipment.

Designation as a non-grease intensive Food Service Establishment shall be as determined by the District Engineer. In most cases, a 200 lb. grease trap will be sufficient for food service establishments that only make sandwiches, bake pizza or are donut shops, which have no other additional food service preparations or cooking onsite. Grease Traps shall have two compartments with acid resistant coated interior and an exterior fabricated steel device as shown in the Standard Details and shall be manufactured by Zurn, or approved equal.

17.04 CONNECTIONS

All kitchen area mop, pot and prep sinks shall be connected to the grease trap or interceptor. All Kitchen floor drains shall be connected to the interceptor.

17.05 DISHWASHERS

Dishwashers drainage shall not be connected to any grease trap or grease interceptor.

17.06 GARBAGE DISPOSALS

Garbage disposals, grinders or other similar devices are prohibited to be installed at all Food Services Establishments.

17.07 CAR WASH AND INDUSTRIAL VEHICLE CLEANING FACILITIES

A Car Wash facility is any commercial enterprise operated for profit, and open to the public, for the purpose of cleaning, washing, waxing, vacuuming, polishing, or detailing cars. Car service facilities, including car dealerships, with any washing activities as part of their business are also considered car wash facilities. Industrial Vehicle Cleaning facilities are industrial/commercial facilities with wash racks or wash pads that clean vehicles, equipment, or a combination thereof.

Sanitary sewer connection and discharge requirements shall be as determined by the District Engineer. If wastewater from the facility must discharge to the sanitary sewer, then Union Sanitary District required pretreatment equipment must be installed. A car wash pad must be designed and constructed to prevent storm water from entering the work area, and to prevent run-off from the wash water generated during the car wash process. Facilities that wash cars and/or equipment onsite as part of their business shall have a 1500-gallon sand oil water interceptor and/or 1500-gallon clarifier installed in series.

17.08 TRASH ENCLOSURES

Trash enclosure connections to the sanitary sewer are limited to food service establishments only and are not permitted for residential developments. All trash enclosures approved to be connected to the sanitary sewer require the installation of a grease interceptor. Trash enclosures shall be designed such that no surface water outside the trash enclosure will drain into the trash enclosure area. The size of the grease interceptor shall be as determined by the District Engineer.

17.09 TRASH COMPACTORS

Trash compactor connections to the sanitary sewer are limited to those serving food service establishments only. The size will be as determined by the District Engineer. Trash compactor enclosures must be designed and constructed to prevent run-on to, or runoff from the area from entering the sanitary sewer connection.

17.10 PARKING STRUCTURES AND LOTS:

Sanitary sewer connections from parking structures and lot floor drains are not allowed.

17.11 VEHICLE EQUIPMENT REPAIR AND MAINTENANCE SHOPS

Sanitary sewer connections from tanks, containers, or sinks, used for motor vehicle parts cleaning or rinsing are not allowed. All parts cleaning solutions or solvents must be captured and hauled off site for proper disposal or recycling. Sanitary sewer connections from vehicle repair or maintenance facility floor drains are not allowed.

17.12 FUELING STATIONS (RETAIL, WHOLESALE AND PRIVATE)

Sanitary sewer connections from fueling areas are not allowed.

17.13 TRENCH DRAINS:

The use of the trench drains is restricted and will be evaluated by District Engineer on a case by case basis. Applicant must demonstrate other alternatives would not be functional.

17.14 SWIMMING POOLS, SPAS AND FOUNTAINS

Direct connections from swimming pools, spas, and fountains to the sanitary sewer are prohibited.

All filter backwash media shall be prevented from entering the sanitary sewer system. Wastewater from the backwash of Diatomaceous Earth Filters shall pass through a solids separation system prior to discharge to the sanitary sewer system. Wastewater from the backwash of sand filters shall pass through a sump or similar device to capture any sand prior to the discharge to the sanitary sewer system. The discharge of pool, spa and/or fountain water is restricted to a flow rate of twenty gallons per minute (20 gpm).

Any outdoor shower area with a drain to the sanitary sewer shall be bermed, raised and/or sloped to prevent the introduction of storm water. The outdoor shower area shall be roofed or equipped with a cover to prevent rainwater from entering the sanitary sewer system.

17.15 OUTSIDE UTILITY EQUIPMENT AREAS

All discharges of polluted water from outside utility equipment areas (roof ventilation systems, boiler blowdown, etc.) shall be discharged to a raised floor sink or similarly raised floor drain to prohibit the discharge of unpolluted (rainwater, storm water run-off) to the sanitary sewer.

17.16 ELEVATOR AND ESCALATOR SUMPS

Sanitary sewer connections from indoor and outdoor elevator and escalator sumps are not allowed.

17.17 CLAY, CERAMIC, GRANITE, MARBLE, GLASS GRINDING AND STONE CUTTING FACILITIES

A trap/sump or other pretreatment device as specified by USD shall be required for all classrooms, manufacturing, fabricating, and any other commercial facility that discharges wastewater containing significant amounts of clay, ceramic, marble, stone, grit, silt or other similar material residuals.

SECTION 18 - MISCELLANEOUS MAIN SEWER AND BUILDING SEWER REQUIREMENTS

18.01 REPAIR OR RELOCATION OF EXISTING MAIN SEWER OR APPURTENANCES

Repairs or relocations of existing main sewers or appurtenances required by reason of damage, or conflict, will be performed by the District or by Contractors engaged by the District, unless authorized otherwise through a USD approved encroachment permit.

Before any such work is started by District Forces, a standard District "Work Order" must be signed by the party or his/her agent, responsible for payment, authorizing the work by District Forces and agreeing to pay charges incurred. Upon completion of work, the District will bill the party responsible for payment thereof.

In event any of the District's existing sewer mains, manholes or other appurtenances are damaged during construction or repair, and the District Engineer, in his/her sole discretion, determines that a threat to the District's system, the District may employ District Forces or other Contractors to take the necessary steps to repair such damage. In such event, the owner of the property involved, the General Contractor and the Sewer Contractor shall jointly and severally be liable for the District's necessary repair cost. The District may withhold acceptance of construction and reporting the same to the Governing Municipality until payment of the District's necessary repair costs or other financial arrangements to compensate the District are made. No "Work Order" must be signed in order for the owner or any of the owners, agents or contractors to be responsible for repair costs sustained by the District in such an emergency situation.

18.02 CONNECTION OR ADJUSTMENTS TO EXISTING MAIN SEWERS OR APPURTENANCES

Except for work on sewers not yet accepted by the District, all work on existing main sewers shall be done by District Forces, including:

A. Splice into Main Sewer (See Section 23.08).

B. Stub into Existing Public Manhole (See Section 22.20)

C. Rechanneling Existing Public Manhole.

D. Installation of Plywood Cover (False Bottom) Over Existing Public Manhole Base Block.

E. Adjust Manhole Casting to Grade

The charge for said work by District Forces is based on the District's current rate schedule. A sewer "work Request Form" signed by the Contractor shall be submitted and the charges as estimated by the District paid prior to issuance of a sewer construction permit. Refunds or additional billing will be made after completion of the work and will be based upon actual costs incurred.

The exact time that the work is to be done by District Forces must be arranged by the Contractor with the District Office (an inspector or an inspection coordinator) at least 48 hours (2 business days) in advance preceding the work day. Messages or voicemails are not acceptable.

Work to be done by District Forces that, due to its' unusual character, is not listed on the rate schedule will be billed after the work is accomplished on the basis of actual costs. Before any such work is started by District Forces, a standard District "Work Order" must be signed by the party responsible for payment, authorizing the work by District Forces.

All work done by District Forces must be paid, or appropriate arrangements satisfactory to District made, prior to District accepting construction and reporting acceptance and approval to the Governing Municipality.

18.03 REPAIR, RELOCATION OF OR CONNECTION TO EXISTING BUILDING SEWERS

Except as noted below, all such work will be done by private Contractors. Minimum inspection fees must be paid and a sewer construction permit issued prior to start of work and all work must be done per District Specifications and subject to District inspection.

In the event damage necessitating repair or relocation of existing building sewers is caused by a public agency, utility company or their respective agents, the work will be done by District Forces.

In these cases, before any such work is started by District Forces, a standard District "Work Order" must be signed by the party or his/her agent, responsible for payment, authorizing the work by District Forces and agreeing to pay charges incurred. Upon completion of the work, the District will bill the party responsible for payment thereof.

In event repair work is deemed necessary by the District, in its sole discretion, to alleviate a threat to the District's sewer system, and no "Work Order" is signed by the party or agent responsible for payment, or emergency repairs are undertaken by District, no approval and acceptance of construction will be issued by District until the reasonable cost of repairs are paid or arrangements appropriate to District are made for such reimbursement.

18.04 USE OF EXISTING BUILDING SEWERS

(See Section 11.05 of the Standard Specifications for requirements).

18.05 ABANDONMENTS

(See Section 11.10 of the Standard Specifications for requirements).

18.06 NUMBER OF BUILDING SEWERS REQUIRED

In accordance with current District Ordinance, the following excerpts are quoted:

"Every building in which plumbing fixtures are installed shall be separately and independently connected to a main sewer or septic tank."

"Where there is more than one building on a lot and where the lot cannot be subdivided under the provisions of any local regulations, a separate building sewer will not be required." For example, "Service buildings, such as a garage, servant's quarters, power house, or other like buildings where required as an adjunct to and to be used in connection with a residence, public buildings, or commercial plant, may be connected to the building sewer serving the main building."

SECTION 19 - REQUIREMENTS PRIOR TO START OF CONSTRUCTION

19.01 PERMIT

The Contractor must have in his/her possession a valid sewer construction permit issued by the District for all sewer construction. Note that no permit will be issued for connection to, or extension of, any sewer not accepted by the District. See current District Ordinance for inspection fee penalty for starting work without a valid sewer construction permit.

No sewer construction permit will be issued by District until the applicant has a valid building permit issued by the Governing Municipality, unless the applicant is a public agency immune from building permit requirements.

Construction permits will be valid only as long as the building permit issued by the Governing Municipality remains valid. Upon the expiration of the building permit issued for such construction, or issuance of a new parcel map or subdivision map, for the construction on same parcel, additional connection charges will be based on any increase subsequent to the initial charges. Capacity charges along with plan checking and other administrative charges, must be paid prior to issuance of a new sewer construction permit.

19.02 STAKING AND CUT SHEETS

(See Sections 22.07 and 23.06 herein for stake location requirements).

Before start of any sewer construction requiring staking, three (3) copies of cut sheets on the Standard District Form must be submitted to the District (Fax transmissions shall not be accepted). They will be checked within twenty-four (24) hours and one (1) approved copy will be furnished to the Contractor for use in construction. Stakes must not be marked with cuts prior to District approval of cut sheets.

A. DISTRICT PROJECTS

The District will provide all construction stakes and prepare all cut sheets necessary for District Projects.

B. MAIN SEWERS

A registered Civil Engineer or Land Surveyor engaged by the Developer will be responsible for setting stakes and preparing cut sheets.

C. BUILDING SEWERS

A Registered Civil Engineer or Land Surveyor engaged by the Developer will be responsible for setting stakes and preparing cut sheets for all "Townhouse" type projects and any other residential, commercial or industrial developments that in the opinion of the Engineer requires a good control of sewer grade and alignment due to flat slopes, other utilities, and/or circuitous routing.

When such staking and cut sheets are required it will be so indicated on the Plans by the Engineer, prior to approval of Plans. If in the opinion of the Engineer, construction requiring stakes have been set, a field check must be made by the Developer's Engineer to verify the accuracy of the stakes.

19.03 INSPECTION

A. DURING NORMAL DISTRICT WORKING HOURS

A request for inspection must be made to the District Inspector or an inspection coordinator a minimum of 24 hours (one full business day) prior to the start of any sewer construction during normal District working hours. Inspection appointments must be confirmed by the District Inspector or inspection coordinator. This notification applies not only to starting new work, but also to restarting work which has been temporarily halted.

B. OUTSIDE OF NORMAL DISTRICT WORKING HOURS

The District Inspector or an inspection coordinator must be notified 48 hours (two business days) prior to the start of any sewer construction outside of normal District working hours and a request must be made for inspection. Messages or voicemails are not acceptable. All inspection performed during these hours shall be reimbursed to the District at the rates in effect at that time, and as part of the notification requires the signing of a "Work Request Form" prior to any inspection of work being performed. Payment of the inspection charges must be made upon receipt of the billing from the District. The current rate for this service can be determined by contacting the District Office. A minimum of four hours overtime will be charged for any inspections requested for weekends or District holidays. Overtime will be charged in one-hour increments for inspection requested in addition to the normal eight-hour working day.

SECTION 20 - APPROVAL AND ACCEPTANCE OF CONSTRUCTION

20.01 MAIN SEWERS

After all construction of the main sewer has been completed to the satisfaction of the Engineer, all fees and charges paid, all easements, annexations, and maps have been recorded and copies have been given to the District, and all other requirements have been met, the main sewer can be accepted as a public sewer by the District.

20.02 BUILDING SEWERS

After all construction of the building sewer has been completed to the satisfaction of the Engineer, all fees and charges paid, and all other requirements met, the building sewer can be approved by the District. This approval of construction will be indicated by the notification of the City in which the work occurred.

20.03 PAYMENT

In no event will a building or main sewer be approved and accepted, and so reported to the Governing Municipality, until all fees and charges are paid, including charges for work done by District Forces and repairs undertaken by District as provided in Sections 11 and 18.

SECTION 21 - SPECIFICATIONS AND DETAILS

21.01 MATERIALS AND METHODS OF CONSTRUCTION

Materials and methods of construction will be as required in the Standard Specifications, and on District-Approved Plans.

21.02 CONSTRUCTION DETAILS

Construction Details will be required on Standard Details and on District-Approved Plans.

SECTION 22 - DESIGN AND POLICY STANDARDS FOR MAIN SEWERS

22.01 PIPE MATERIALS

Limited to Vitrified Clay Pipe (VCP), Poly Vinyl Chloride Pipe (PVC, SDR 26 or less), High density Polyethylene pipe (HDPE, DR 21 or less) and Ductile Iron Pipe (DIP, Pressure Class 250 or greater with non-corrosive lining) all as listed in the Standard Specifications.

22.02 PIPE MATERIAL CHANGES

Size or pipe material changes are not allowed between any two manholes.

22.03 SIZE AND SLOPE

Minimum pipe size is eight (8) inches in diameter. The sewers should be designed as steep as possible with due consideration for service area and other controls. Unless otherwise permitted by the Engineer, the slopes shown in the following table will be minimum for sewer sizes shown:

Pipe Diameter, inches	Minimum Slope, feet per foot
8	0.0034
10	0.0026
12	0.0020
15	0.0015
18	0.0012
(Larger sewer sizes shall have a minimum slope as specified by the Engineer).	

Sewer design will be based on District Master Plans as to ultimate total volume of flow expected from the tributary area. Sewers are designed to flow full at peak flows. Peaking factors are based on location and expected future conditions. (Manning formula with n = 0.013 will be used for all pipe materials).

22.04 ALIGNMENT

Sewer shall be laid in a straight alignment except that horizontal curved sewers may be used when located within a defined street area and concentric with center of street unless otherwise approved. Minimum curve radius shall be in accordance with Section 7.01.F.

22.05 CROSS CONNECTION

Sewers will be required to be designed cross-connected except in dead end streets.

22.06 GRADE

Sewer shall be laid on a straight grade except that vertical curved sewers may be used only in specific instances when so authorized by the Engineer. Conditions to be met will be specified in each instance by the Engineer.

22.07 GRADE STAKES

Unless otherwise required by the Engineer, sewer construction stakes will be located at 50 feet maximum intervals except that on horizontal curves and on sewers with a slope flatter than 0.0034 feet per foot the maximum spacing will be 25 feet. The maximum spacing of construction stakes on vertical curves shall be 10 feet.

The stakes shall be offset from the center line of the sewer at a safe distance from the edge of the trench but in no case greater than 10 feet unless authorized by the Engineer. The stakes will be marked with off-set distance and station only.

22.08 DESIGN DEPTH

To avoid interference between building sewers and other utilities, the sanitary sewer main should be designed, when possible, at a minimum of 6.5 feet below finished grade.

22.09 MINIMUM PIPE COVER

Minimum permitted cover in inches over outside top of pipe bell to top of "backfill" or to existing ground at time of sewer installation, whichever is lower, is shown in the table on Standard Detail No. 18B.

Cover requirements for other pipe materials and sizes will be based on their strength characteristics as approved by the Engineer.

22.10 TRENCH INTERSECTIONS

Avoid non-perpendicular crossings/intersections between the sanitary sewer and other underground utilities.

22.11 HORIZONTAL UTILITY CLEARANCE

A minimum horizontal clearance of five (5) feet should be maintained between the sewer main and adjacent underground utility mains and concrete curbs. A minimum horizontal clearance of ten (10) feet should be maintained between the sewer main and parallel water mains, unless approved in advance by the Engineer.

22.12 CROSSING STORM DRAINS

A. VITRIFIED CLAY PIPE (VCP)

Whenever a VCP pipe main or building sewer crosses over a storm drain, regardless of the vertical clearance, or under a storm drain with less than six (6) inches vertical clearance, span the storm drain trench with single length of PVC SDR 26 Pipe, and extend a minimum distance on each side of the trench per Standard Details.

B. FLEXIBLE PIPE

Whenever a flexible pipe main or building sewer crosses over a storm drain, a single length of similar flexible pipe may span the storm drain trench. Pipe couplings are not allowed within the storm drain trench.

If the strength characteristics of the flexible pipe is exceeded, the span of the storm drain trench shall be made with a single length of PVC SDR 26 Pipe, and extend a minimum distance on each side of the trench per Standard Details. Conditions to be met will be specified in each instance by the Engineer.

22.13 CROSSING WATER MAINS

No main or building sewer shall be installed over a water main where the vertical clearance is less than twelve (12) inches. The water main shall be spanned with a single length of PVC Pressure Pipe (SDR 14) per Standard Details.

No main sewer shall be installed under a water main with less than twelve (12) inches of vertical clearance.

22.14 STRUCTURE LOCATIONS

Except as noted below, manholes are required at all angle points, changes in grade and permanent dead ends. Maximum structure spacing is 450 feet unless otherwise permitted by the Engineer. Risers are not allowed for new construction.

22.15 MAIN LOCATIONS

To accommodate traffic control and access, mains should be located in the center of traffic lanes, when possible. For two-lane streets without medians, the mains should be located approximately 5 feet on either side of the street centerline.

22.16 INVERT ELEVATIONS AT MANHOLES

The invert elevations of the incoming and outgoing sewers shall be shown on the plans, and unless authorized by the Engineer, the following shall apply:

A. SEWERS OF SAME DIAMETER

Where two or more main sewers of the same diameter intersect, the difference in invert elevations of the incoming and outgoing sewers shall be a minimum of 0.01 foot per 10-degree deflection between mains with a maximum of 0.10 foot for a deflection of 90 degrees. Main sewers through manhole with no deflection will be designed with no change in invert elevation. In situations where the flow in the downstream sewer is more than half full, the District (at their discretion) may require the incoming sewer's invert to be installed higher to minimize backwater conditions

B. SEWERS OF DIFFERENT DIAMETERS

Where two or more main sewers of different diameters intersect, the invert elevations of the incoming and outgoing sewers shall be so related that the inside tops (crown) of the sewers are at the same elevation. In situations where the flow in the downstream sewer is more than half full, the District (at their discretion) may require the incoming sewer's invert to be installed higher to minimize backwater conditions.

22.17 MAXIMUM DEFLECTION AT MANHOLES

At manholes, the upstream deflection angle at the intersection of two main sewers must not be greater than 100 degrees.

22.18 BUILDING SEWER CONNECTION AT MANHOLES

Four (4) inch and six (6) inch Building Sewers will not normally be permitted to be connected into manholes except for dead end manholes. (See Section 23.08 herein).

22.19 MANHOLE RIM ELEVATION

Manhole rim elevation shall be shown on Plans to nearest 0.10 foot, unless otherwise indicated on the Plans, it shall be assumed to be flush with the adjacent ground surface. In areas where future streets will be constructed, rim elevation shall also be shown for future finished grade.

22.20 CONNECTION TO EXISTING MANHOLE

In existing manholes where no stub exists, District forces will provide a channel in the portion of the base block located inside the manhole two inches larger than the outside diameter of the proposed stub. It shall be the responsibility of the Contractor to perform all the necessary work on the exterior of the manhole in preparation for the installation of the new stub. The Contractor shall be responsible for the alignment and grade of the new stub. The Contractor shall make a water-tight seal of the new stub from the outside of the manhole. All work by the Contractor shall be performed in a manner that will

maintain the integrity of the existing manhole. District forces will finish the inside channel at the developer's expense. The Contractor shall provide 24 hours' notice to the District prior to the start of any work.

22.21 CONNECTIONS BETWEEN MAIN SEWERS

Connections of new main sewers into existing main sewers must be made by means of a new manhole installed by the Contractor with District Forces doing the channeling at Developers cost. (See Sections 18.02 and 23.08 herein for connection of building sewer into existing main sewer).

22.22 DROP MANHOLES

Normally, drop manholes are not permitted. Use of vertical curve is usually more desirable. Use of drop manholes will be at the discretion of the District Engineer.

22.23 BOLT-DOWN MANHOLES

Standard District bolt-down manhole frame and cover without vent holes shall be required when manhole is located on a lot where there will be a residence.

22.24 EASEMENT WIDTH REQUIREMENTS

Main sewers not located in public streets must be situated within Sanitary Sewer Easements or within Public Utility Easements. Unless otherwise required by the Engineer, 15 feet is the minimum width when manholes lie within the easement and 10 feet is minimum otherwise.

22.25 EASEMENT PAVING REQUIREMENTS

All manhole structures appurtenant to sanitary main sewers must be accessible to District maintenance vehicles.

Where deemed necessary by the Engineer, this accessibility shall be achieved by means of an adequately surfaced roadway of a design approved by said Engineer.

22.26 EASEMENT ACCESS REQUIREMENTS

Access to and along the easement, including all manholes shall be feasible and safely achievable by District maintenance vehicles.

SECTION 23 - DESIGN AND POLICY STANDARDS FOR BUILDING SEWERS

23.01 SIZE AND SLOPE

Minimum size of building sewer shall be four (4) inches in diameter but in no case smaller than the building drain (building plumbing) stub diameter. Plumbing fixture unit values, as established by the latest edition of the California Plumbing Code, shall be used in designing the building sewer.

The following Table shows (for four-inch and six-inch diameter sewers) the minimum slope in percent permissible for the maximum number of plumbing fixture units noted. Note that cut sheets will be required for 6 inch sewers with slope less than 1.0%.

(Please note however, that in areas where the mains are of adequate depth that 2% slope is the preferred minimum for 4-inch sewers and 1% slope is the preferred minimum for 6-inch sewers.)

Maximum Fixture Units	4-inch Diameter Building Sewer	6-inch Diameter Building Sewer
200	1.0%	0.5%
600	N.A.	0.5%
700	N.A.	0.6%
800	N.A.	0.7%
900	N.A.	0.8%
1000	N.A.	0.9%
1200	N.A.	1.0%

When over 1200 fixture units are to be accommodated, 8 inch or larger diameter building sewer may be used, in accordance with main sewer design criteria. (See Section 22 herein).

23.02 PIPE MATERIALS

All materials authorized for use in the Standard Specifications may be used for domestic waste. Additionally, Schedule 40 PVC can be used for 4-inch and 6-inch diameter building sewers. Specific District approval of pipe material will be required for a sewer that will convey industrial waste. When building sewers are located under porches, steps, breezeways, roofed patios, carports, covered walks, covered driveways and similar structures they shall be constructed of P.V.C. (SDR 18 or 14).

23.03 ALIGNMENT

Sewer alignment shall be as straight as possible. When angle points are approved, only one 45 degree (maximum) change of direction (horizontal or vertical) is permissible without a cleanout. Any additional changes of direction (horizontal or vertical), thereafter, in excess of 22 ½ degrees shall be served by a cleanout or manhole. Ninety-degree bends or tees are not permitted.

23.04 BUILDING PLUMBING (BUILDING DRAIN) LOCATION

The location should be arranged so that the point of connection with the building sewer is on that portion of the building facing the public sewer main.

23.05 GRADE

Unless otherwise authorized by the Engineer, the sewer shall be laid on a straight grade between the main sewer and the property line and between the property line and the building drain (building plumbing). Changes in grade shall be served by a cleanout or manhole.

23.06 GRADE STAKES

When cut sheets are required, sewer construction stakes shall be located at angle points, grade breaks, cleanouts, wyes, structures and at a 50-foot maximum spacing. An additional stake will also be required at property line and at connection point with building plumbing (building drain).

The stakes shall be offset from the center line of the sewer at a safe distance from the edge of the trench but in no case greater than 10 feet unless authorized by the Engineer. The stakes will be marked with off-set and station only.

When the sewer is to be constructed to property line only, the Engineer may require a stake to be set at the point prior to construction.

23.07 CURB MARKING

At the time the curb stakes are set (prior to construction of curb and gutter) an additional stake must be set by the Developer's Engineer on the curb stake line opposite the point at which the building sewer crosses the property line. This will insure that the "S" can be stamped in the fresh concrete in the proper location as required under Section 11.06 of the Standard Specifications.

23.08 CONNECTION TO EXISTING MAIN SEWER

Unless otherwise permitted or required by the Engineer, the connection of a four (4) inch diameter building sewer into an existing eight (8) inch or larger diameter main sewer, or the connection of a six (6) inch diameter building sewer into an existing 10 inch or larger diameter main sewer will be made by installation of a wye spliced into the existing main sewer or a stub installed by means of a tap made by "Tap Tite" or approved equal. The connection of the building sewer to the main sewer shall be airtight and at the option of the Engineer may require air testing.

The connection of a four (4) inch diameter building sewer into an existing six (6) inch sewer main, or the connection of a six (6) inch diameter building sewer into an existing eight (8) inch main sewer will be made by installation of a wye spliced into the existing main sewer.

Contractor will not be permitted to splice wye on existing USD main sewers (see Section 18.02 herein), unless approved by the Engineer.

Connection of building sewers to sewer lines larger than 15 inches in diameter will only be permitted when so approved by the Engineer.

23.09 ELEVATION AT CONNECTION TO MAIN SEWER

When sufficient grade is available, design sewer elevations at connection to main sewer on the basis that the invert elevation of the building sewer is equal to the inside top elevation of the main sewer.

23.10 CONNECTION TO EXISTING BUILDING SEWER

The connection may be made by means of a private manhole, wye spliced into existing building sewer or stub installed by means of a tap made by "Tap Tite" or approved equal, all as shown on Standard Details and on District Approved Plans.

Actual connection of a new building sewer to an existing building sewer will not be permitted until the new sewer has been satisfactorily tested. If authorized by the Engineer, a test wye may be used with a plug in lieu of leaving a temporary gap in the sewer.

23.11 CONNECTION TO BUILDING DRAIN (PLUMBING KICK-OUT)

After a permit authorizing said construction has been issued, building sewers may be constructed up to a point 5 feet from the building wall. Actual connection of the building sewer to the building drain (building plumbing) will not be permitted however, until the main sewer or building sewer to which it connects has been accepted by the District and the subject building sewer has been satisfactorily tested in accordance with Standard Specifications Section 12.

Actual connection must be done by a sewer contractor with a valid sewer construction permit issued by the District. Work must be done in the presence of and to the satisfaction of the Engineer.

23.12 CLEARANCES

A. Unless otherwise permitted by the Engineer, when a building sewer crosses another utility, a vertical clearance of at least six (6) inches shall be maintained.

B. Unless otherwise permitted in the California Plumbing Code, building sewers and other utilities shall be kept sufficiently separated to be laid in separate trenches.

23.13 PARALLEL TO FOOTING

Any sewer deeper than the footing of any building or structure and paralleling the same must be designed to be of sufficient distance from the footing so that no part of the trench will fall within a 45-degree line drawn downward from the bottom of the footing (see Standard Details).

23.14 CROSSING STORM DRAINS

A. VITRIFIED CLAY PIPE (VCP)

Whenever a VCP pipe building sewer crosses over a storm drain, regardless of the vertical clearance, or under a storm drain with less than six (6) inches vertical clearance, span the storm drain trench with a single length of PVC Pressure Pipe (SDR 18), and extend a minimum distance on each side of the trench per Standard Details.

B. FLEXIBLE PIPE

Whenever a flexible pipe building sewer crosses over a storm drain, a single length of similar flexible pipe may span the storm drain trench. Pipe couplings are not allowed within the storm drain trench.

If the strength characteristics of the flexible pipe are exceeded, the span of the storm drain trench shall be made with a single length of PVC Pressure Pipe (SDR 18), and extend a minimum distance on each side of the trench per Standard Details. Conditions to be met will be specified in each instance by the Engineer.

23.15 CROSSING WATER MAINS

No building sewer shall be installed over a water main where the vertical clearance is less than twelve (12) inches. Where the vertical clearance over a water main is more than twelve (12) inches span the water main with one length of PVC Pressure Pipe (SDR 18) per Standard Details.

23.16 MINIMUM PIPE COVER

Minimum permitted cover in inches over outside top of pipe bell to top of "Backfill" or to existing ground at time of sewer installation, whichever is lower, is shown in the table on Standard Detail Sheet titled: Sewer Pipe Installation.

Cover requirements for other pipe materials and sizes will be based on their strength characteristics as approved by the Engineer.

23.17 TRENCH INTERSECTIONS

Avoid non-perpendicular crossings/intersections between the sanitary sewer and other underground utilities.

23.18 HORIZONTAL UTILITY CLEARANCE

A minimum horizontal clearance of five (5) feet should be maintained between the building sewer and adjacent underground utility lines and concrete curbs. A minimum horizontal clearance of ten (10) feet should be maintained between the building sewer and parallel water mains or services.

23.19 STRUCTURE TYPE AND LOCATION

A. PRIVATE MANHOLE

Private manholes must be constructed on building sewers eight (8) inches in diameter and larger with maximum spacing of 450 feet, at changes in horizontal or vertical direction, and at other locations required by the Engineer. They may be used on smaller building sewers in lieu of cleanouts.

A "control manhole" is required on the building sewer serving each user in an industrial building, if so required by the Engineer in accordance with District Ordinances.

B. CLEANOUT TO GRADE (FULL BORE) "C.O.T.G."

A cleanout shall be constructed on four (4) inch and six (6) inch sewer at intervals not to exceed 100 feet as well as at locations indicated in Section 23.03 herein. See Section "C" below for requirements at connection to building plumbing. Also see "A" above for use of manholes in lieu of cleanout to grade. No cleanout is required on runs less than 10 feet in length (See Section 7.05 in Standard Specifications).

C. TWO-WAY CLEANOUT TO GRADE

Two-way cleanouts shall be constructed on all four (4) inch sewers at the connection of the building sewer with the plumbing drain. This cleanout shall be located no further than 30 inches from the building wall and protected with an approved box. (See Section 7.06 in Standard Specifications).

D. TEST WYE

A test wye shall be constructed at locations shown on Plans or as required by the Engineer to facilitate testing of the building sewers. (See Section 7.07 in Standard Specifications).

E. ANY OTHER STRUCTURES

Other structures required will be located as shown on approved Plans and be constructed in accordance with District requirements.

23.20 OVERFLOW DEVICES

Overflow protection devices shall be installed on building sewers when specifically required by the Engineer. The particular device to be used and its installation must be approved by the Engineer. This device will be required on all residential and commercial buildings where the floor elevation is six (6) inches or less above the closest upstream manhole rim elevation.

23.21 NUMBER OF BUILDING SEWERS REQUIRED

See Section 18.06.

23.22 PRIVATE PUMPING STATIONS

Private pumping stations should be avoided if possible. Private pumping stations must be approved by the Engineer. The pumping stations should be designed and stamped by a California registered civil engineer. Submittals including design calculations, flows, pump information, etc. shall be made to the Engineer. Minimum requirements for private pumping stations are shown in the Standard Details.

23.23 NEW UTILITIES CROSSING EXISTING SEWER MAINS AND BUILDING SEWERS

A. New utilities shall be installed with a minimum of 12-inches of clearance when crossing an existing sewer main or building sewer.

B. If requested by the District, existing sewer main or building sewer shall be CCTV inspected prior to and after installation of new utility.

C. If requested by the District, submit work plan and provide final clearance measurement of crossing utility.

(THIS PAGE LEFT BLANK INTENTIONALLY)

STANDARD DETAILS

TITLE	DETAIL NO.
Standard Manhole	1
Trunk Manhole	2
Drop Manhole	3
Special Manhole Base for Dead End Manholes in Cul-de-sacs	4
Private Control Manhole Types “A” and “B”	5
Private Control Manhole Type “C”	6
Manhole Frame and Cover	7
Bolt-Down Manhole Frame and Cover	8
Private Manhole Frame and Cover	9
Private Control Manhole Frame and Cover	10
36” Diameter Manhole Frame and Cover	11
Riser	12
Riser Frame and Cover for 6”, 8” and 10” Diameter Pipe	13
Building Sewer Details	14A
Building Sewer Details – Zero Lot Line Connection	14B
Standard Building Sewer Cleanout to Grade	15
Sanitary Sewer/Storm Drain Crossing	16
Sanitary Sewer/Water Main Crossing	17
Sewer Pipe Installation (Cover, Slope, Special Bedding and Encasement Requirements)	18A
Sewer Pipe Installation (Trench Backfill Materials)	18B
Sand/Oil/Water Separator	19
Clarifier	20
Grease Interceptor	21
Grease Trap	22
Trash Enclosure Interceptor	23
Commercial/Multi-Family Residential Pumping Station	24A
Commercial/Multi-Family Residential Pumping Station – Connection to Main and Notes	24B
Single-Family Residential Pumping Station	25
Mobile Home/RV/Trailer Holding Tank Disposal Facility	26
Overflow/Backflow Prevention Device	27
Pipe Casing	28
Pool Filter Backwash Sump	29
Air Gap for Fire Sprinkler Test	30
Street/Access Road Requirements	31
Pipe Concrete Cap	32
Manhole Transition Riser	33

(THIS PAGE LEFT BLANK INTENTIONALLY)

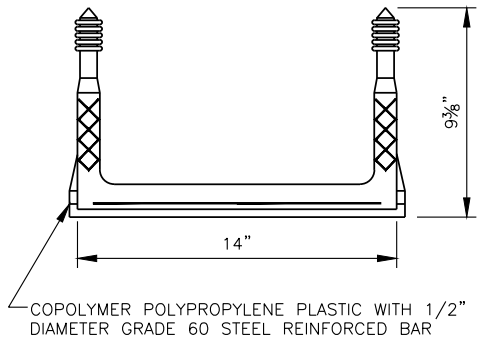

MANHOLE STEPS

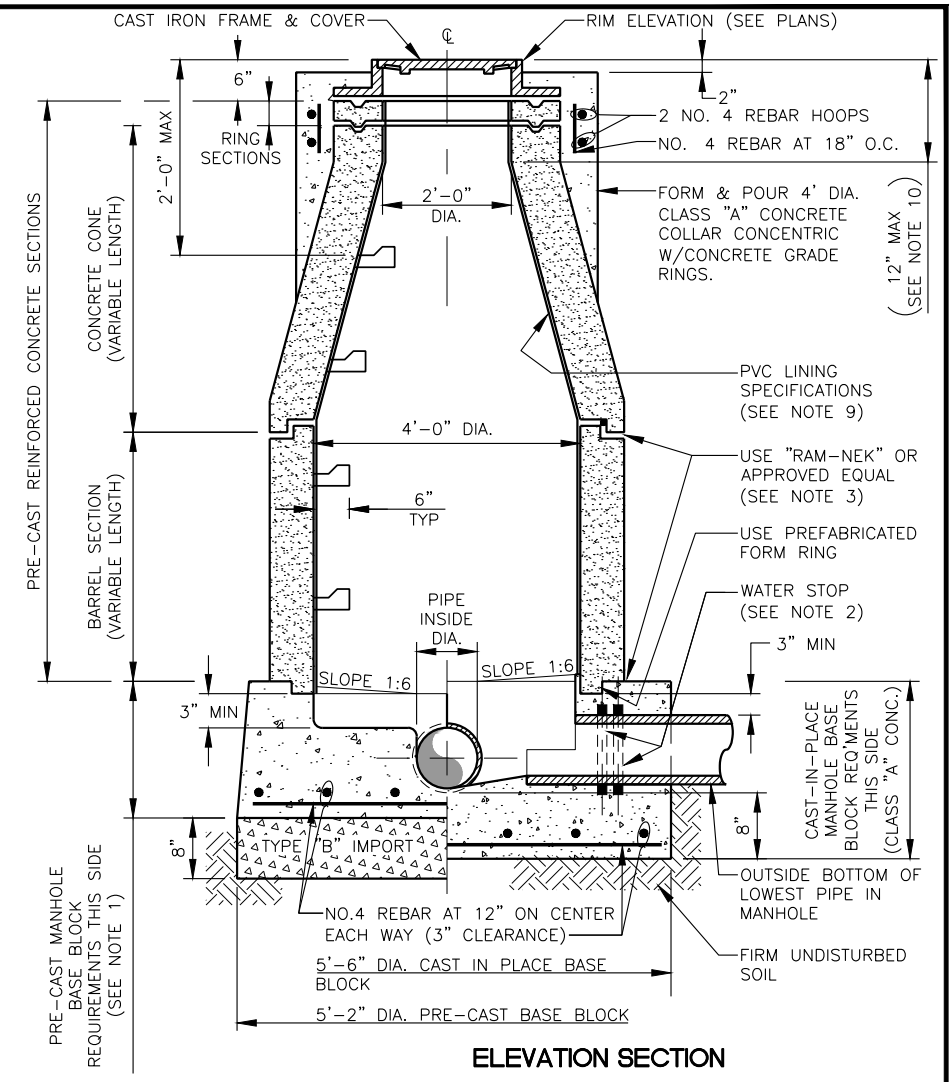

ELEVATION SECTION

NOT TO SCALE

NOTES:

1. PRE-CAST MANHOLE SECTIONS SHALL BE AS MANUFACTURED BY OLDCASTLE PRECAST, 3786 VALLEY AVE, PLEASANTON, CA 94566, OR APPROVED EQUAL. PRE-CAST MANHOLE BASE BLOCKS SHALL ONLY BE USED AFTER PRIOR APPROVAL HAS BEEN RECEIVED FROM USD AND CITY FOR EACH LOCATION TO BE USED.
2. FLEXIBLE PIPE ONLY – AN APPROVED WATER STOP, SUCH AS TWO O-RINGS OR A BANDED RUBBER COUPLING, SHALL BE INSTALLED ON ALL FLEXIBLE PIPE ENTERING OR LEAVING A MANHOLE AND CENTERED UNDER THE MANHOLE WALL AS SHOWN.
3. INSTALL "RAM-NEK" OR APPROVED EQUAL BETWEEN EACH JOINT OF THE CONE AND BARREL SECTIONS TO MAKE A FLEXIBLE WATER-TIGHT JOINT. AFTER JOINT IS MADE, TRIM JOINT SMOOTH ON THE INSIDE OF MANHOLE.
4. ALL STEPS SHALL BE INSTALLED IN PRE-CAST SECTIONS BY MANUFACTURER AND SPACED 10"-15" APART.
5. PRE-CAST SECTIONS SHALL BE INSTALLED SO THAT STEPS ARE ALIGNED VERTICALLY AND AS SHOWN IN THE PLAN SECTION.
6. IF THE DISTANCE FROM THE MANHOLE RIM TO THE TOP OF THE BASE BLOCK IS LESS THAN 4'-0", ORDER PRE-CAST SECTIONS WITHOUT STEPS.
7. CEMENT MORTAR SHALL BE USED BETWEEN ALL GRADE RINGS.
8. SHEAR BAND COUPLING NOT REQUIRED FOR FLEXIBLE PIPE OR IF MANHOLE IS INSTALLED OVER EXISTING SANITARY SEWER.
9. PVC LINE STANDARD MANHOLES WHERE REQUIRED BY THE ENGINEER.
10. 1'-6" MAX FOR EXISTING MANHOLES.
11. CONCRETE COLLAR IN PAVED AREA SHALL BE 4'-0" DIAMETER AND IN UNPAVED AREA, IT SHALL BE 6'-0" DIAMETER SQUARED.

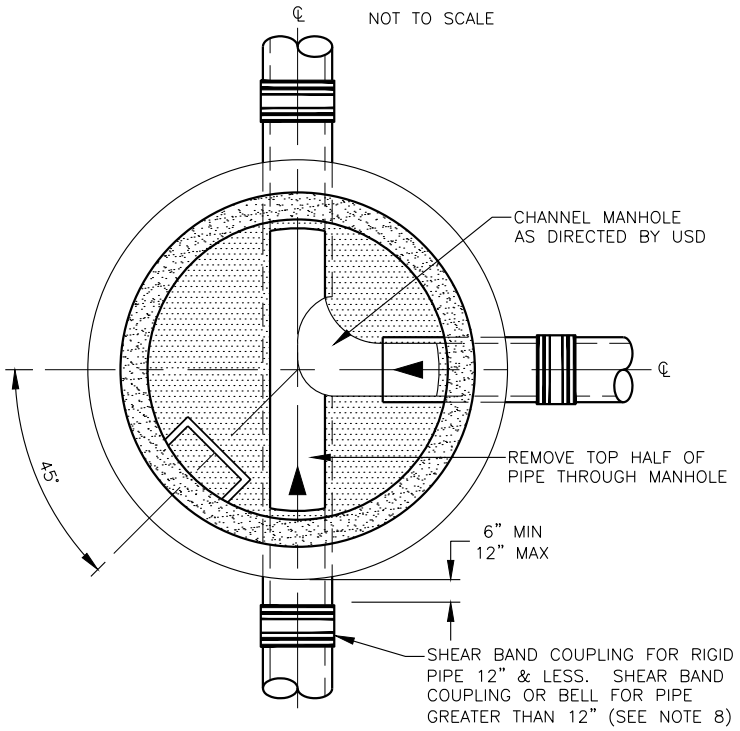

PLAN SECTION

NOT TO SCALE

Date 3/15/17 Detail No. 1 Approved By PAUL R. ELDREDGE, RCE 60211	UNION SANITARY DISTRICT	STANDARD MANHOLE	1

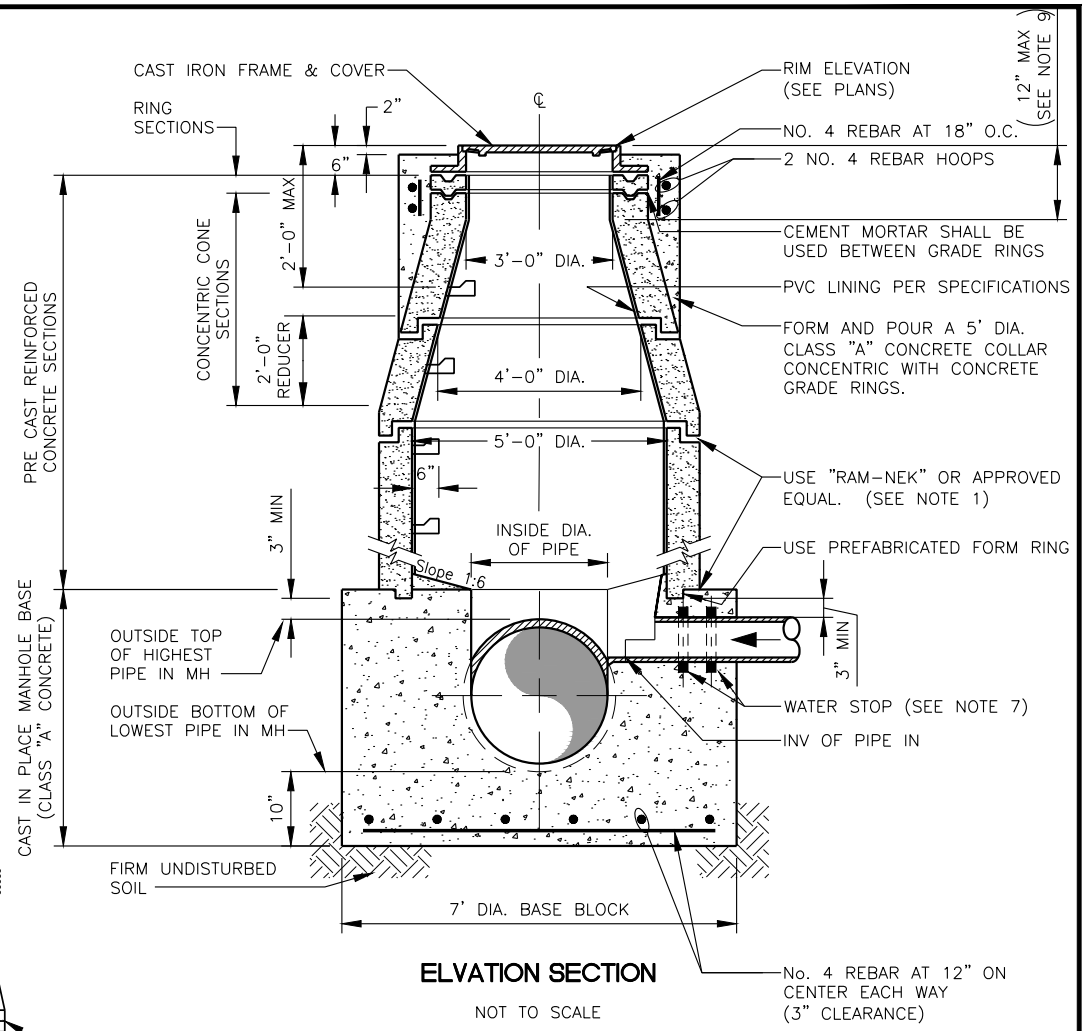

ELVATION SECTION

NOT TO SCALE

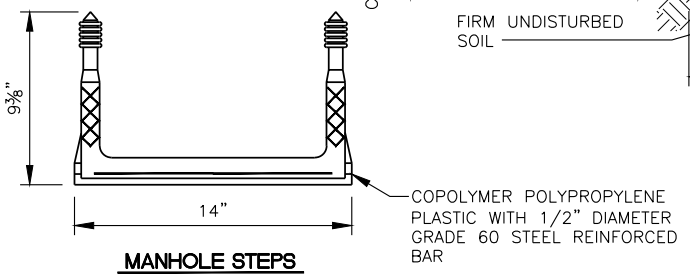

MANHOLE STEPS

NOTES:

1. INSTALL "RAM-NEK" OR APPROVED EQUAL BETWEEN EACH JOINT OF THE CONE AND BARREL SECTIONS TO MAKE A FLEXIBLE WATER-TIGHT JOINT. AFTER JOINT IS MADE, TRIM JOINT SMOOTH ON THE INSIDE OF MANHOLE.
2. ALL STEPS SHALL BE INSTALLED IN PRE-CAST SECTIONS BY MANUFACTURER AND SPACED 10"-15" APART.
3. PRE-CAST SECTIONS SHALL BE INSTALLED SO THAT STEPS ARE ALIGNED VERTICALLY AND AS SHOWN IN THE PLAN SECTION.
4. IF DISTANCE FROM MANHOLE RIM TO TOP OF BASE BLOCK IS LESS THAN 4'-0", ORDER PRE-CAST SECTIONS WITHOUT STEPS.
5. TRUNK MANHOLES ARE REQUIRED WHEN THE SEWER LINE IS 24" OR LARGER IN DIAMETER.
6. SHEAR BAND COUPLING NOT REQUIRED FOR FLEXIBLE PIPE OR IF MANHOLE IS INSTALLED OVER EXISTING SANITARY SEWER.
7. FLEXIBLE PIPE ONLY – AN APPROVED WATER STOP, SUCH AS TWO O-RINGS OR A BANDED RUBBER COUPLING, SHALL BE INSTALLED ON ALL FLEXIBLE PIPE ENTERING OR LEAVING A MANHOLE AND CENTERED UNDER THE MANHOLE WALL AS SHOWN.
8. CEMENT MORTAR SHALL BE USED BETWEEN ALL GRADE RINGS.
9. 1'-6" MAX FOR EXISTING MANHOLES.
10. CONCRETE COLLAR IN PAVED AREA SHALL BE 4'-0" DIAMETER AND IN UNPAVED AREA, IT SHALL BE 6'-0" DIAMETER SQUARED.

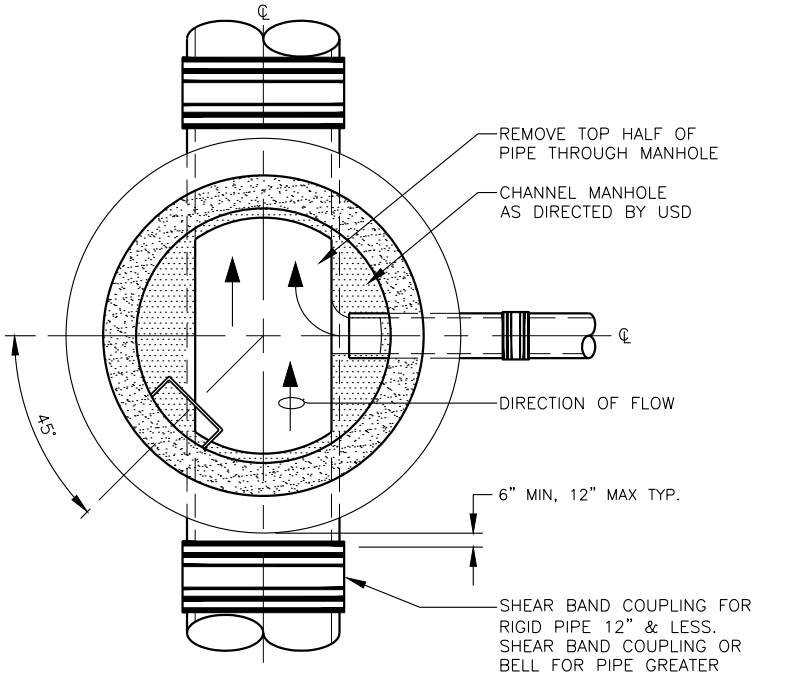

PLAN SECTION

NOT TO SCALE

Date 3/15/17 Detail No. 2 Approved By PAUL R. ELDREDGE, RCE 60211	UNION SANITARY DISTRICT	TRUNK MANHOLE	2

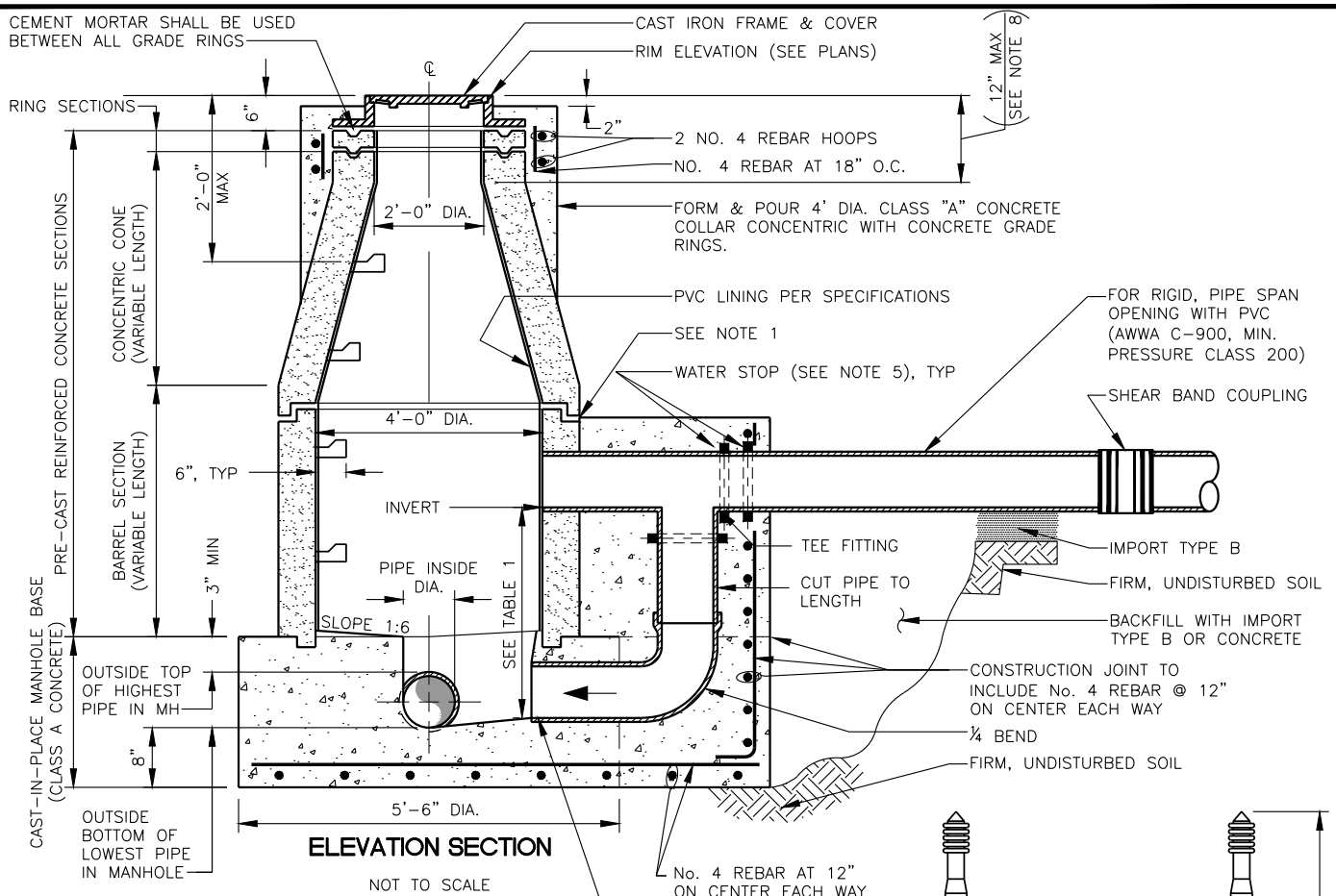

ELEVATION SECTION

NOT TO SCALE

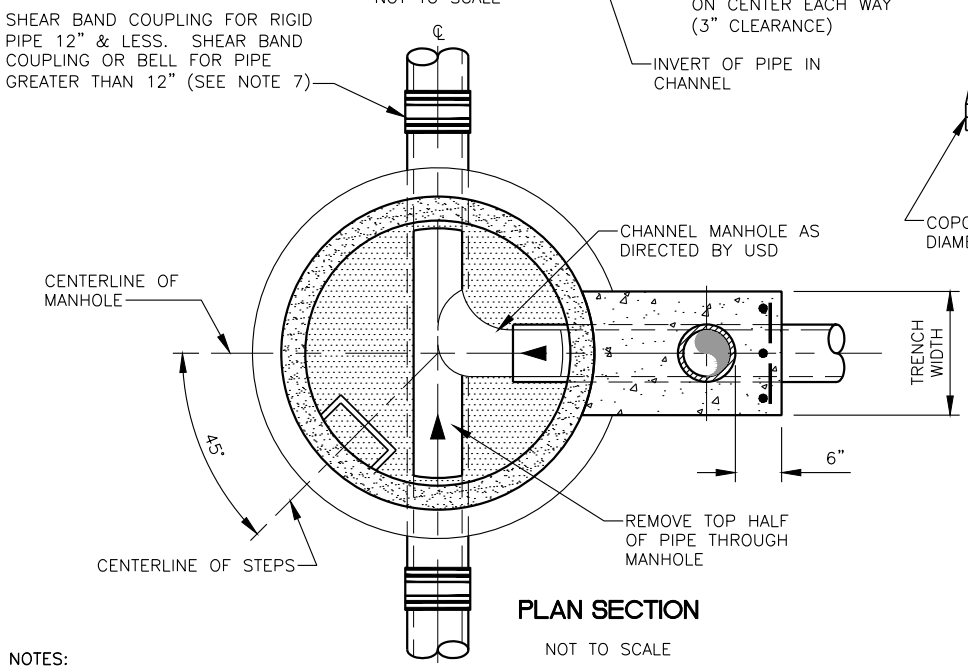

PLAN SECTION

NOT TO SCALE

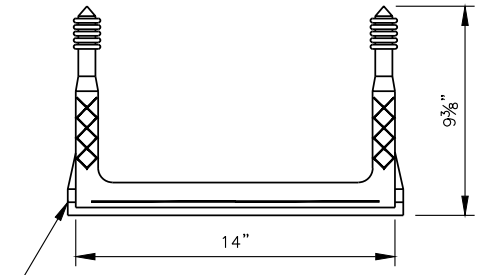

MANHOLE STEPS

TABLE 1

PIPE DIAMETER	MIN DROP
8"	24"
10"	31"
12"	35"
15"	42"

NOTES:

1. INSTALL "RAM-NEK" OR APPROVED EQUAL BETWEEN EACH JOINT OF THE CONE AND BARREL SECTIONS. AFTER JOINT IS MADE, TRIM JOINT SMOOTH ON THE INSIDE OF MANHOLE.
2. ALL STEPS SHALL BE INSTALLED IN PRE-CAST SECTIONS BY MANUFACTURER AND SPACED APART BY 10"-15".
3. PRE-CAST SECTIONS SHALL BE INSTALLED SO THAT STEPS ARE ALIGNED VERTICALLY AND AS SHOWN IN THE PLAN SECTION.
4. IF DISTANCE FROM MANHOLE RIM TO TOP OF BASE BLOCK IS LESS THAN 4'-0", ORDER PRE-CAST SECTION WITHOUT STEPS.
5. FLEXIBLE PIPE ONLY – AN APPROVED WATER STOP, SUCH AS TWO O-RINGS OR A BANDED RUBBER COUPLING, SHALL BE INSTALLED ON ALL FLEXIBLE PIPE ENTERING OR LEAVING A MANHOLE, AND CENTERED UNDER THE MANHOLE WALL AS SHOWN.
6. CEMENT MORTAR SHALL BE USED BETWEEN ALL GRADE RINGS.
7. SHEAR BAND COUPLING NOT REQUIRED FOR FLEXIBLE PIPE OR IF MANHOLE IS INSTALLED OVER EXISTING SANITARY SEWER.
8. 1'-6" MAX FOR EXISTING MANHOLES.

Date 3/15/17 Detail No. 3

Approved By PAUL R. ELDREDGE, RCE 60211

UNION SANITARY DISTRICT

DROP MANHOLE

3

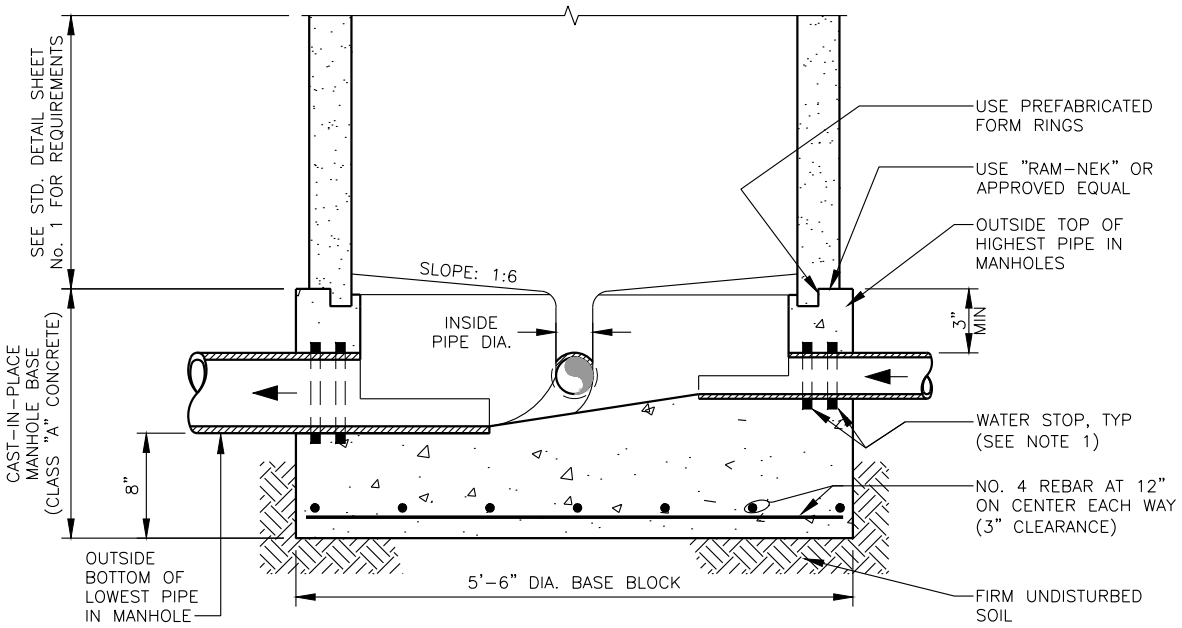

ELEVATION SECTION

NOT TO SCALE

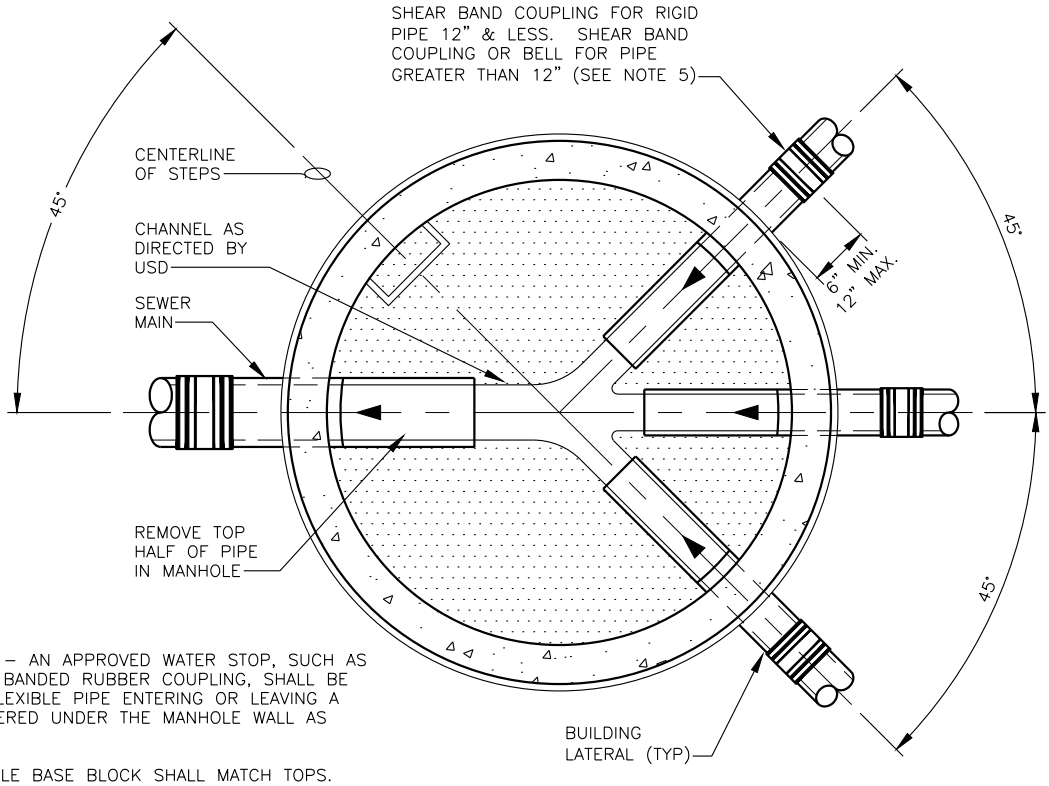

PLAN SECTION

NOT TO SCALE

NOTES:

1. FLEXIBLE PIPE ONLY – AN APPROVED WATER STOP, SUCH AS TWO O-RINGS OR A BANDED RUBBER COUPLING, SHALL BE INSTALLED ON ALL FLEXIBLE PIPE ENTERING OR LEAVING A MANHOLE, AND CENTERED UNDER THE MANHOLE WALL AS SHOWN.
2. ALL PIPES IN MANHOLE BASE BLOCK SHALL MATCH TOPS.
3. MAXIMUM NUMBER OF LATERALS TO BE CONNECTED TO A DEAD END MANHOLE IN A CUL-DE-SAC IS THREE (3).
4. INSTALL "RAM-NEK" OR APPROVED EQUAL BETWEEN EACH JOINT OF THE CONE AND BARREL SECTIONS TO MAKE A FLEXIBLE WATER-TIGHT JOINT. AFTER JOINT IS MADE, TRIM JOINT SMOOTH ON THE INSIDE OF MANHOLE.
5. SHEAR BAND COUPLING NOT REQUIRED FOR FLEXIBLE PIPE OR IF MANHOLE IS INSTALLED OVER EXISTING SANITARY SEWER.

Date 3/15/17 Detail No. 4 Approved By PAUL R. ELDREDGE, RCE 60211	UNION SANITARY DISTRICT	SPECIAL MANHOLE BASE FOR DEAD END MANHOLES IN CUL-DE-SACS	4

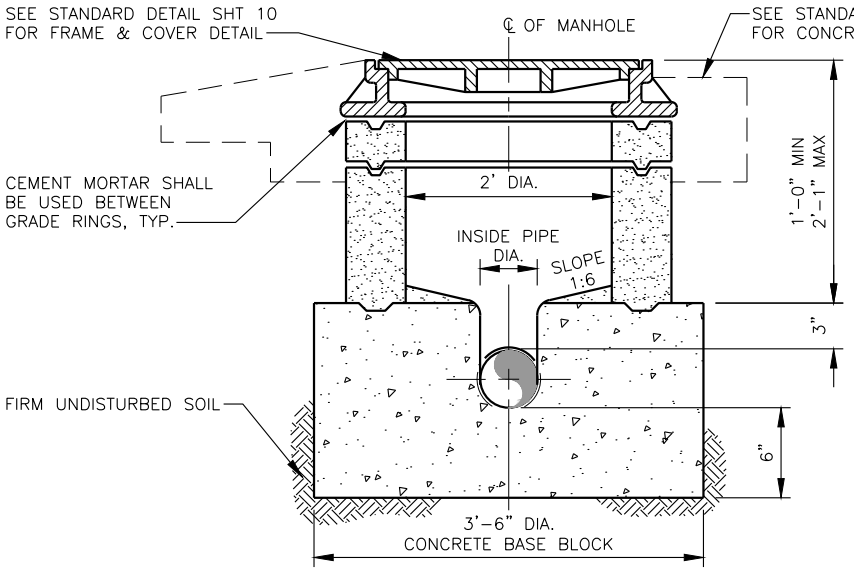

TYPE "A" MANHOLE

NOT TO SCALE

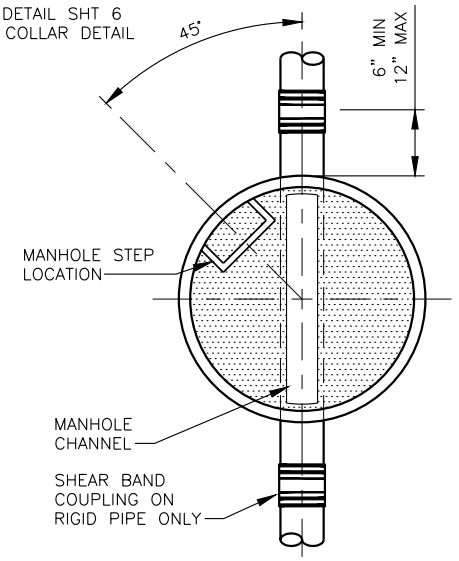

TYPICAL PLAN SECTION

NOT TO SCALE

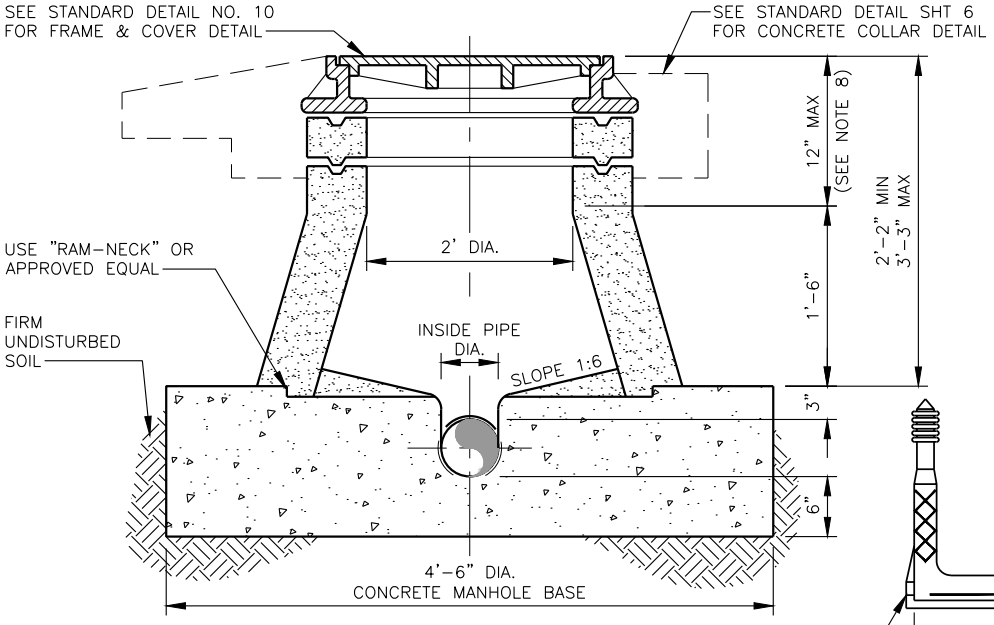

TYPE "B" MANHOLE

NOT TO SCALE

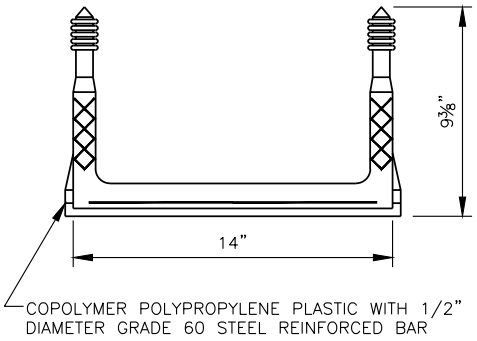

MANHOLE STEPS

NOTES:

1. TYPE "C" PRIVATE CONTROL MANHOLE (DETAIL NO. 6) SHALL BE USED IN MOST CIRCUMSTANCES. TYPE "A" & "B" SHALL BE USED ONLY WITH SPECIAL PERMISSION BY THE ENGINEER.
2. INSTALL "RAM-NEK" OR APPROVED EQUAL BETWEEN EACH JOINT OF THE CONE AND BARREL SECTIONS TO MAKE A FLEXIBLE, WATER-TIGHT JOINT. AFTER JOINT IS MADE, TRIM JOINT SMOOTH ON THE INSIDE OF MANHOLE.
3. DO NOT INSTALL STEPS IN MANHOLE NECKS OR IN A MANHOLE THAT IS LESS THAN 4 (FOUR) FEET DEEP. IF MANHOLE IS GREATER THAN 4 (FOUR) FEET DEEP, STEPS SHALL BE INSTALLED AND EQUALLY SPACED AT INTERVALS FROM 10"-16" APART AND ALIGNED VERTICALLY.
4. COLLAR AND MANHOLE BASE SHALL BE CLASS "A" CONCRETE POURED IN PLACE.
5. INSTALL PRIVATE CONTROL MANHOLE FRAME AND COVER AS SHOWN ON DETAIL NO. 10 OF USD STANDARD SPECIFICATIONS.
6. ALL CONCRETE GRADE RINGS, CONES AND BARREL SECTIONS SHOWN ABOVE ARE PRECAST AS MANUFACTURED BY OLDCASTLE PRECAST, 3786 VALLEY AVE, PLEASANTON, CA 94566, OR AN APPROVED EQUAL.
7. FOR FLEXIBLE PIPE ONLY – AN APPROVED WATER STOP, SUCH AS BANDED RUBBER COUPLING, SHALL BE INSTALLED ON ALL FLEXIBLE PIPE ENTERING OR LEAVING A MANHOLE AND CENTERED UNDER THE MANHOLE WALL.
8. 1'-6" MAX FOR EXISTING MANHOLES.

Date 3/15/17 Detail No. 5 Approved By PAUL R. ELDREDGE, RCE 60211	UNION SANITARY DISTRICT	PRIVATE CONTROL MANHOLE TYPES "A" AND "B"	5

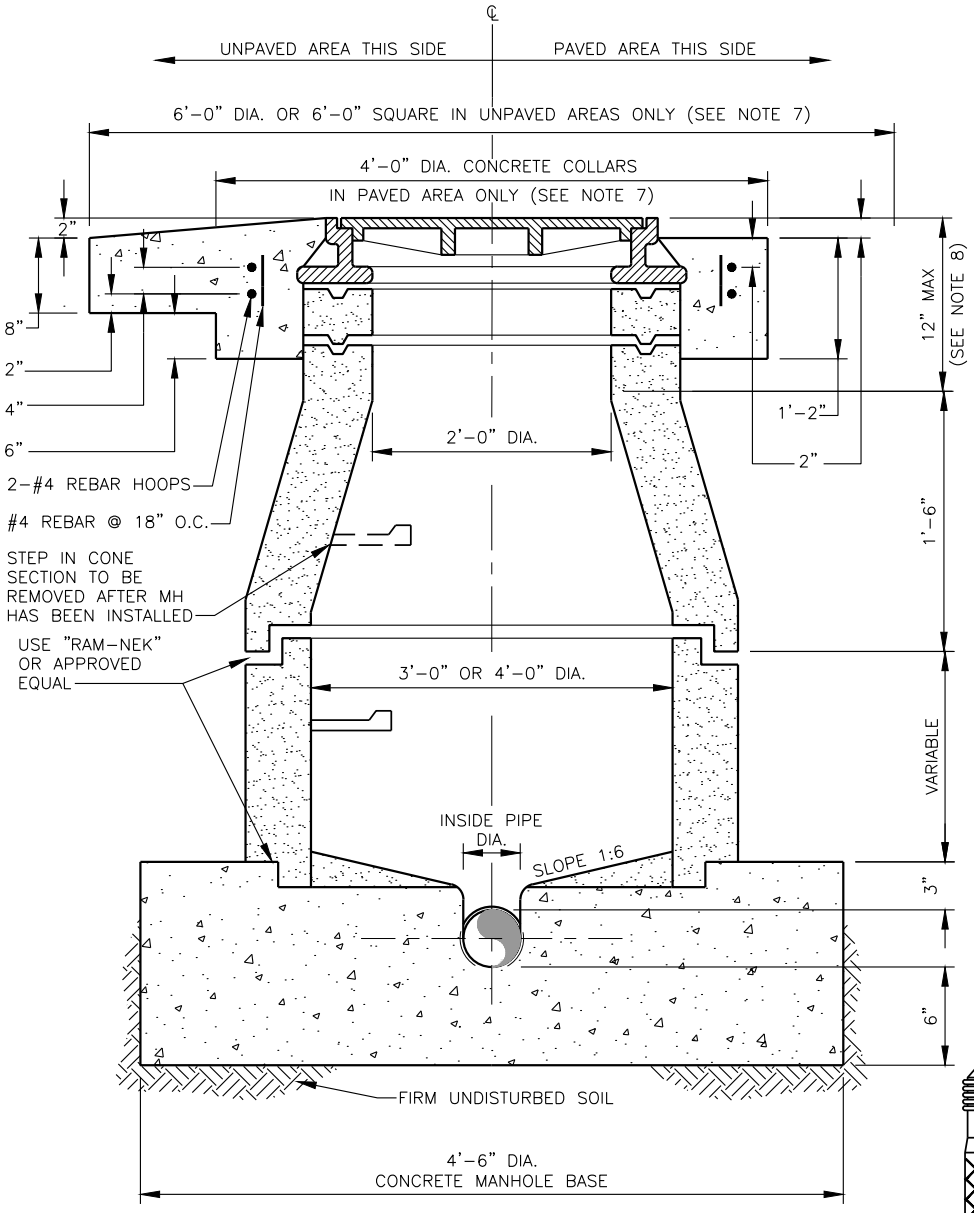

TYPE "C" MANHOLE

NOT TO SCALE

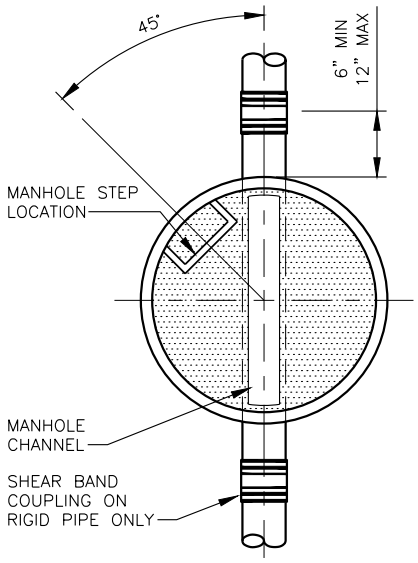

TYPICAL PLAN SECTION

NOT TO SCALE

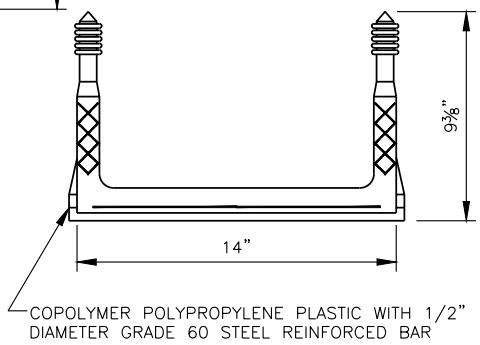

MANHOLE STEPS

NOTES:

1. INSTALL "RAM–NEK" OR APPROVED EQUAL BETWEEN EACH JOINT OF THE CONE AND BARREL SECTIONS TO MAKE A FLEXIBLE, WATER–TIGHT JOINT. AFTER JOINT IS MADE, TRIM JOINT SMOOTH ON THE INSIDE OF MANHOLE.
2. DO NOT INSTALL STEPS IN MANHOLE NECKS OR IN A MANHOLE THAT IS LESS THAN 4 (FOUR) FEET DEEP. IF MANHOLE IS GREATER THAN 4' DEEP, STEPS SHALL BE INSTALLED AND EQUALLY SPACED AT INTERVALS FROM 10"–15" APART AND ALIGNED VERTICALLY.
3. COLLAR AND MANHOLE BASE SHALL BE CLASS "A" CONCRETE POURED IN PLACE.
4. INSTALL PRIVATE CONTROL MANHOLE FRAME AND COVER AS SHOWN ON STANDARD DETAIL NO. 10.
5. ALL CONCRETE GRADE RINGS, CONES AND BARREL SECTIONS SHOWN ABOVE ARE PRE CAST AS MANUFACTURED BY OLDCASTLE PRECAST, 3786 VALLEY AVE, PLEASANTON, CA 94566, OR AN APPROVED EQUAL.
6. FLEXIBLE PIPE ONLY – AN APPROVED WATER STOP, SUCH AS BANDED RUBBER COUPLING, SHALL BE INSTALLED ON ALL FLEXIBLE PIPE ENTERING OR LEAVING A MANHOLE, AND CENTERED UNDER THE MANHOLE WALL.
7. CONCRETE COLLAR IN PAVED AREA SHALL BE 4'–0" DIAMETER AND IN UNPAVED AREA IT SHALL BE 6'–0" DIAMETER OR SQUARED.
8. 1'–6" MAX FOR EXISTING MANHOLES.

Date 3/15/17 Detail No. 6 Approved By PAUL ELDREDGE, RCE 60211	UNION SANITARY DISTRICT	PRIVATE CONTROL MANHOLE TYPE "C"	6

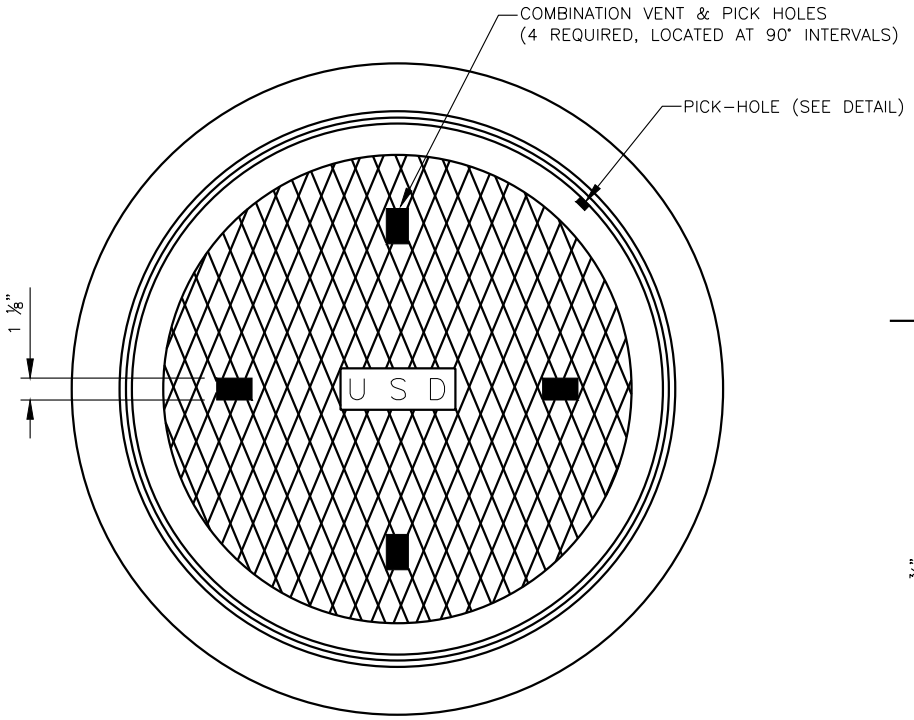

PLAN SECTION

NOT TO SCALE

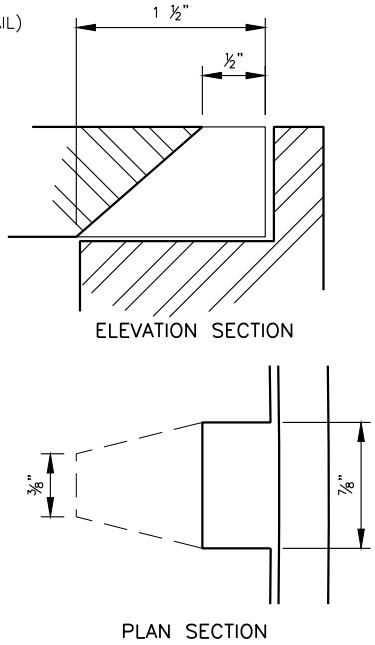

PICK HOLE DETAIL

NOT TO SCALE

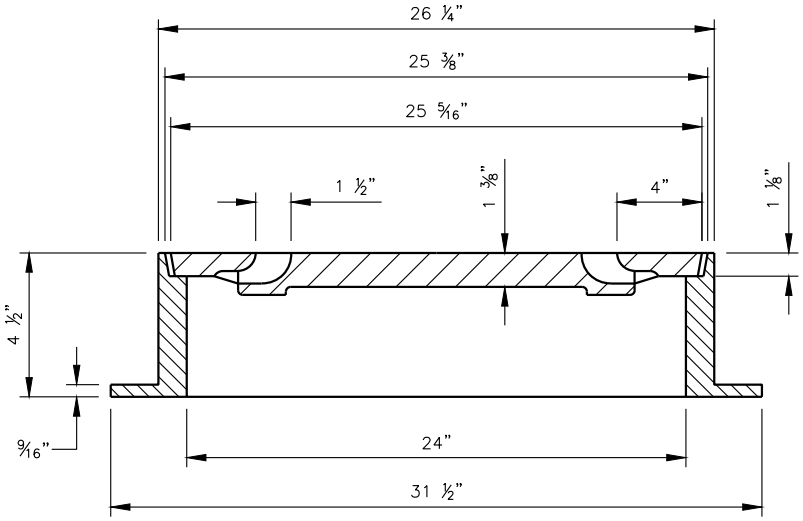

ELEVATION SECTION

NOT TO SCALE

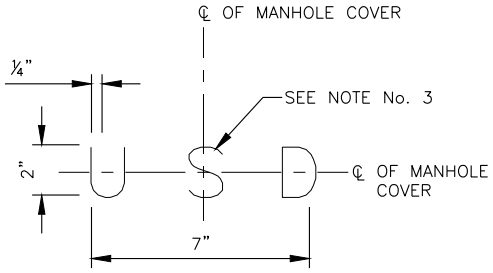

LETTERING DETAIL

NOTES:

1. MINOR MODIFICATIONS IN ABOVE DIMENSIONS AND MANUFACTURING CONFIGURATIONS ARE PERMISSIBLE SUBJECT TO DISTRICT APPROVAL.
2. CAST IRON FOR FRAME AND COVER SHALL BE CLASS 30 MINIMUM AS PER ASTM A-48.
3. RAISED LETTERS ¼" HIGH TO BE CAST IN CENTER OF MANHOLE COVER.
4. BEFORE LEAVING THE FOUNDRY, THE FRAME AND COVER SHALL BE PAINTED OR DIPPED IN ASPHALT PAINT.
5. MANHOLE FRAME AND COVER SHALL BE AS MANUFACTURED BY SOUTH BAY FOUNDRY, 42 N. CLUFF AVE., LODI, CA 95240, OR APPROVED EQUAL.
6. FRAME AND COVER BEARING SURFACES SHALL BE MACHINED TO ASSURE CLOSE, QUIET FIT.

Date 3/15/17 Detail No. 7 Approved By PAUL R. ELDREDGE, RCE 60211	UNION SANITARY DISTRICT	MANHOLE FRAME AND COVER	7

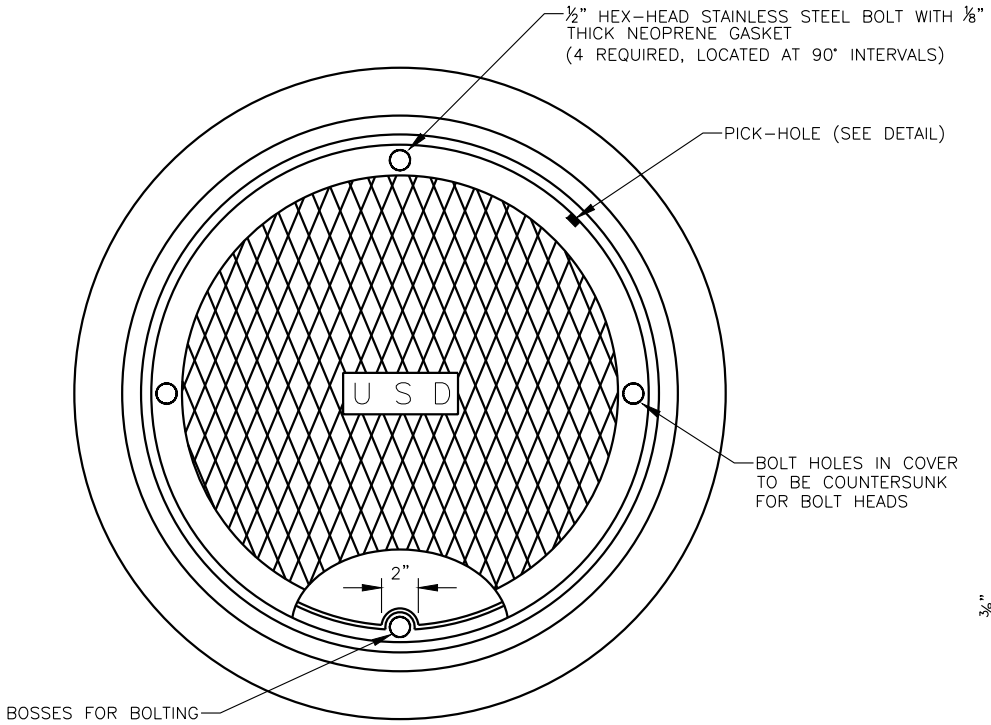

PLAN SECTION

NOT TO SCALE

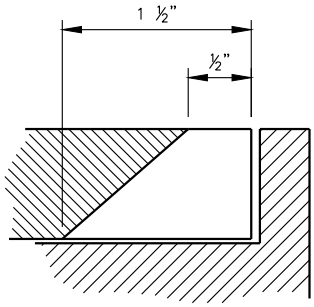

ELEVATION SECTION

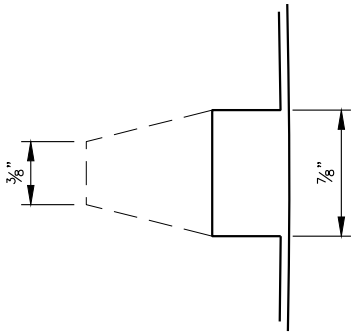

PLAN SECTION

PICK HOLE DETAIL

NOT TO SCALE

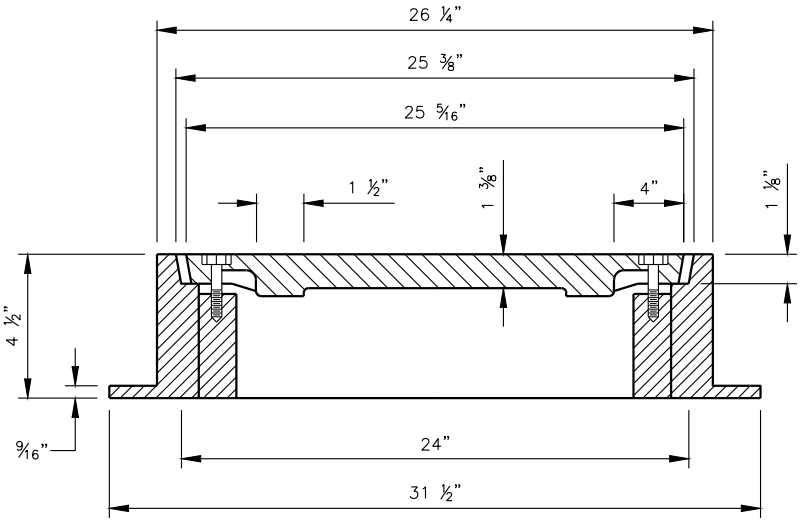

ELEVATION SECTION

NOT TO SCALE

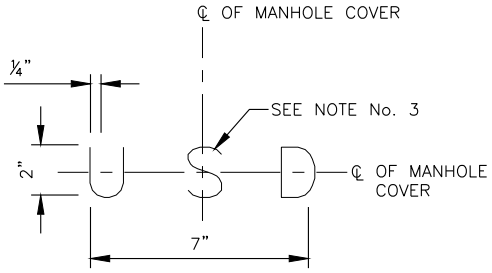

LETTERING DETAIL

NOTES:

1. MINOR MODIFICATIONS IN ABOVE DIMENSIONS AND MANUFACTURING CONFIGURATIONS ARE PERMISSIBLE SUBJECT TO DISTRICT APPROVAL.
2. CAST IRON FOR FRAME AND COVER SHALL BE CLASS 30 MINIMUM AS PER ASTM A-48.
3. RAISED LETTERS ¼" HIGH TO BE CAST IN CENTER OF MANHOLE COVER.
4. BEFORE LEAVING THE FOUNDRY, THE FRAME AND COVER SHALL BE PAINTED OR DIPPED IN ASPHALT PAINT.
5. MANHOLE FRAME AND COVER SHALL BE AS MANUFACTURED BY SOUTH BAY FOUNDRY, 42 N. CLUFF AVE., LODI, CA 95240, OR APPROVED EQUAL.
6. FRAME AND COVER BEARING SURFACES SHALL BE MACHINED TO ASSURE CLOSE, QUIET FIT.

Date 3/15/17 Detail No. 8 Approved By PAUL R. ELDREDGE, RCE 60211	UNION SANITARY DISTRICT	BOLT-DOWN MANHOLE FRAME AND COVER	8

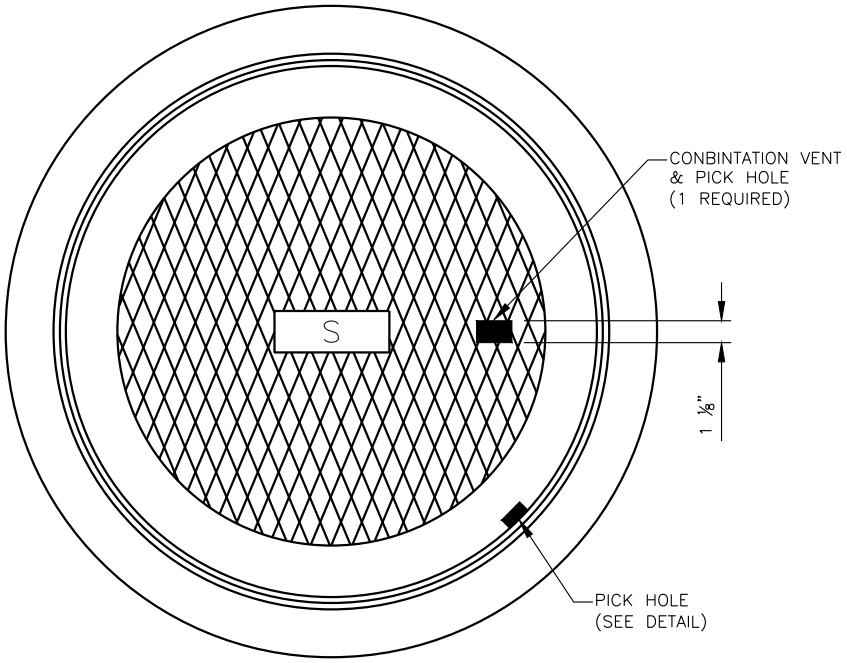

PLAN SECTION

NOT TO SCALE

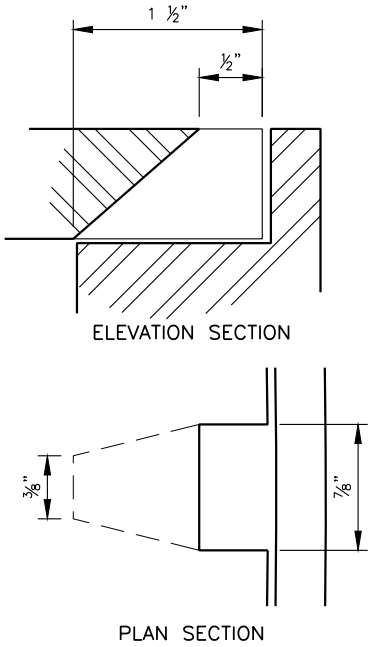

PICK HOLE DETAIL

NOT TO SCALE

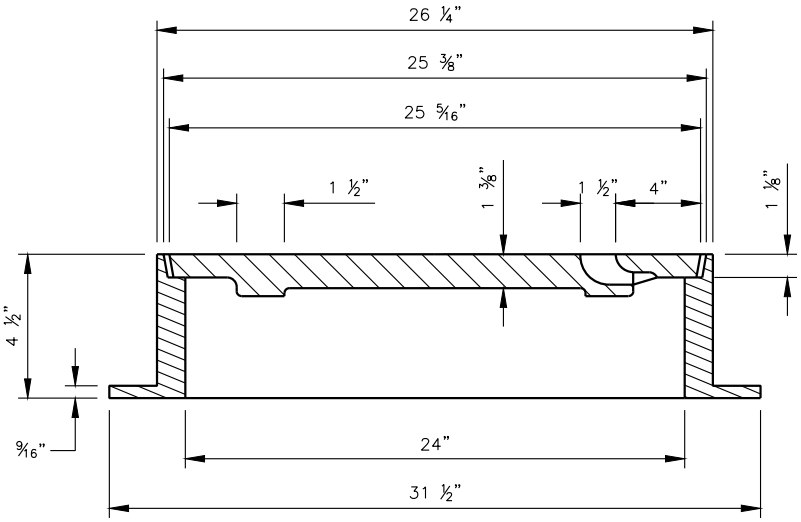

ELEVATION SECTION

NOT TO SCALE

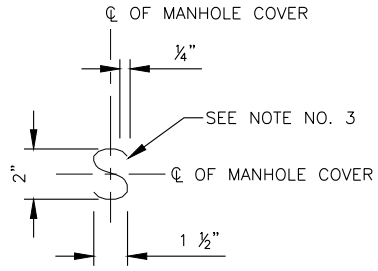

LETTERING DETAIL

NOTES:

1. MINOR MODIFICATIONS IN ABOVE DIMENSIONS AND MANUFACTURING CONFIGURATIONS ARE PERMISSIBLE SUBJECT TO DISTRICT APPROVAL.
2. CAST IRON FOR FRAME AND COVER SHALL BE CLASS 30 MINIMUM AS PER ASTM A–48.
3. RAISED LETTERS ¼" HIGH TO BE CAST IN CENTER OF MANHOLE COVER.
4. BEFORE LEAVING THE FOUNDRY, THE FRAME AND COVER SHALL BE PAINTED OR DIPPED IN ASPHALT PAINT.
5. MANHOLE FRAME AND COVER SHALL BE AS MANUFACTURED BY SOUTH BAY FOUNDRY, 42 N. CLUFF AVE., LODI, CA 95240, OR APPROVED EQUAL.
6. FRAME AND COVER BEARING SURFACES SHALL BE MACHINED TO ASSURE CLOSE, QUIET FIT.

Date 3/15/17 Detail No. 9 Approved By PAUL R. ELDREDGE, RCE 60211	UNION SANITARY DISTRICT	PRIVATE MANHOLE FRAME AND COVER	9

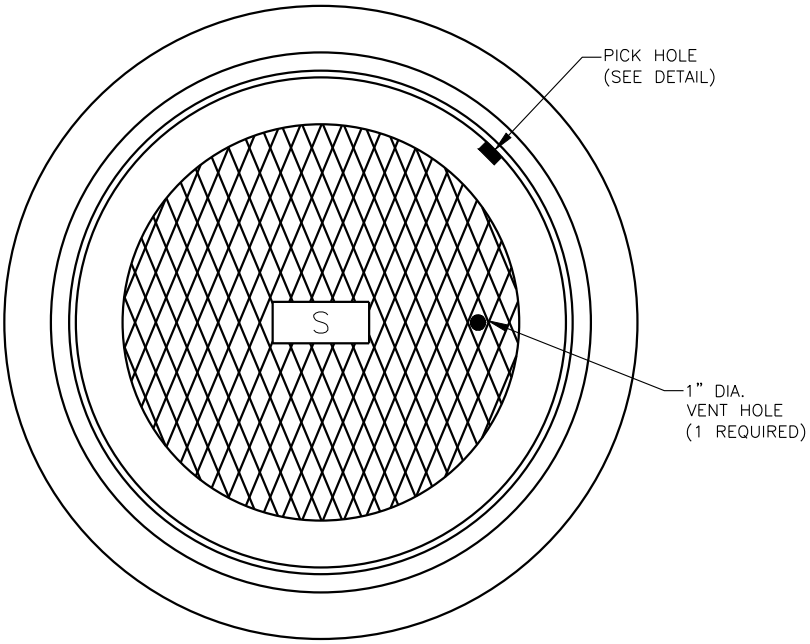

PLAN SECTION

NOT TO SCALE

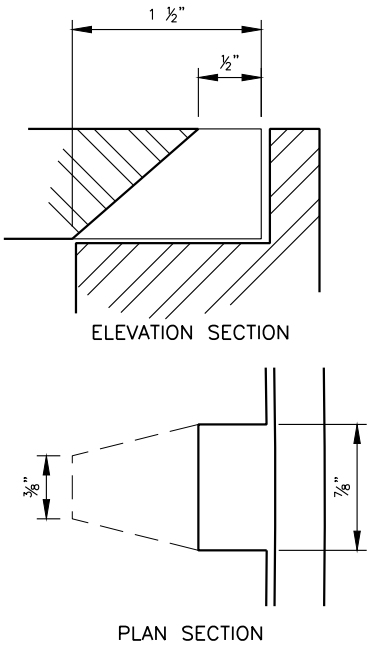

PICK HOLE DETAIL

NOT TO SCALE

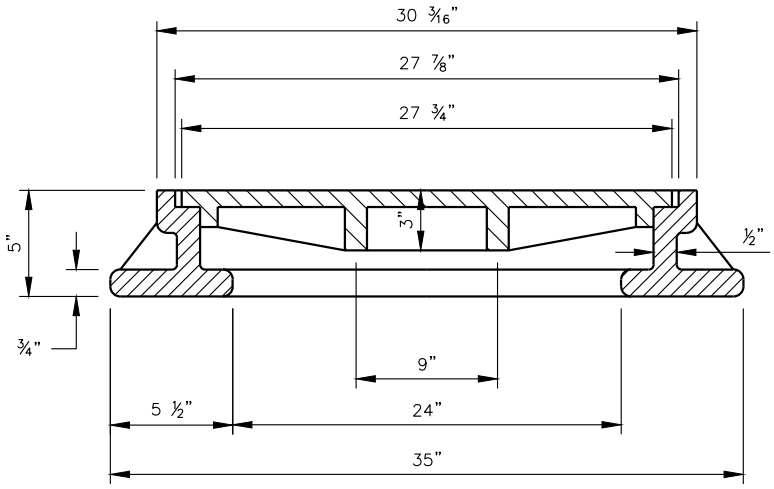

ELEVATION SECTION

NOT TO SCALE

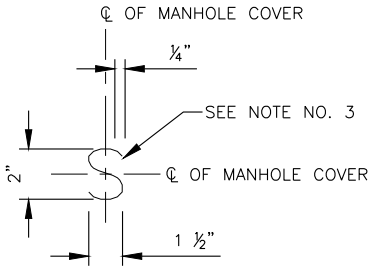

LETTERING DETAIL

NOTES:

1. MINOR MODIFICATIONS IN ABOVE DIMENSIONS AND MANUFACTURING CONFIGURATIONS ARE PERMISSIBLE SUBJECT TO DISTRICT APPROVAL.
2. CAST IRON FOR FRAME AND COVER SHALL BE CLASS 30 MINIMUM AS PER ASTM A–48.
3. RAISED LETTERS ¼" HIGH TO BE CAST IN CENTER OF MANHOLE COVER.
4. BEFORE LEAVING THE FOUNDRY, THE FRAME AND COVER SHALL BE PAINTED OR DIPPED IN ASPHALT PAINT.
5. MANHOLE FRAME AND COVER SHALL BE AS MANUFACTURED BY SOUTH BAY FOUNDRY, 42 N. CLUFF AVE., LODI, CA 95240, OR APPROVED EQUAL.
6. FRAME AND COVER BEARING SURFACES SHALL BE MACHINED TO ASSURE CLOSE, QUIET FIT.

Date 3/15/17 Detail No. 10 Approved By PAUL R. ELDREDGE, RCE 60211	UNION SANITARY DISTRICT	PRIVATE CONTROL MANHOLE FRAME AND COVER	10

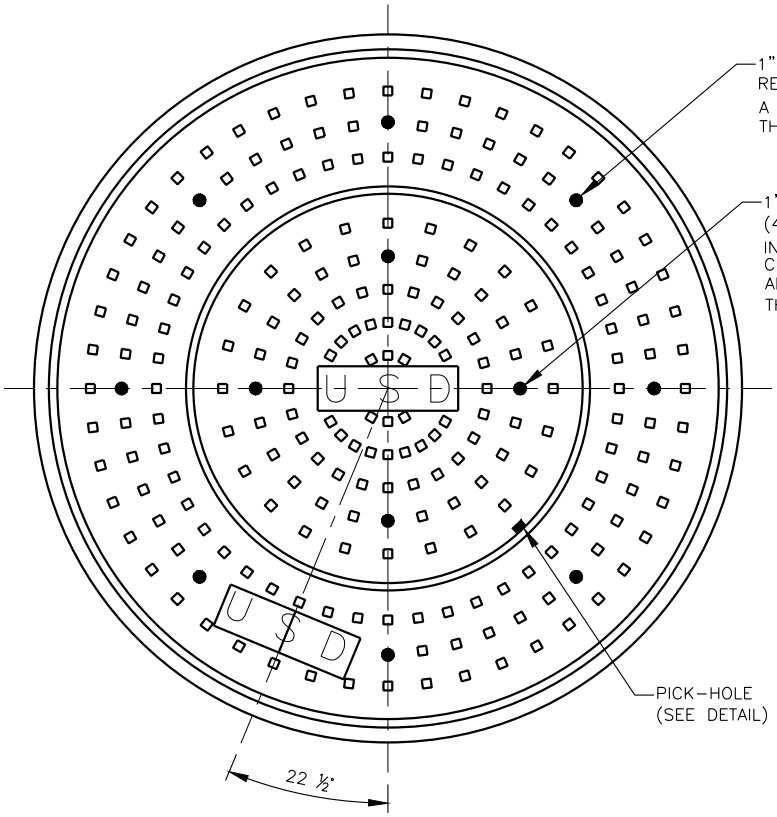

PLAN SECTION

NOT TO SCALE

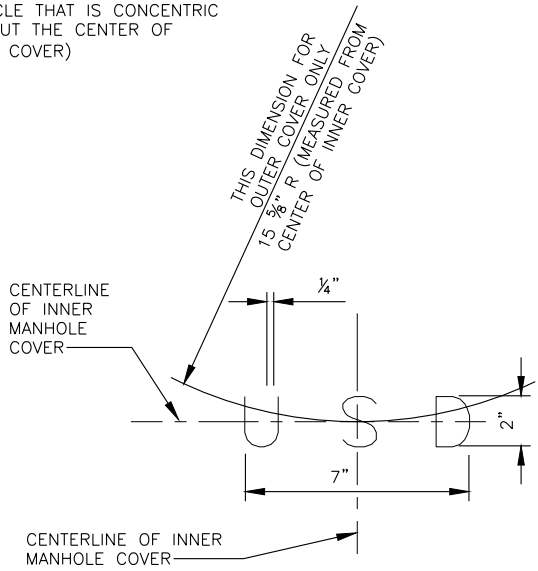

LETTERING DETAIL

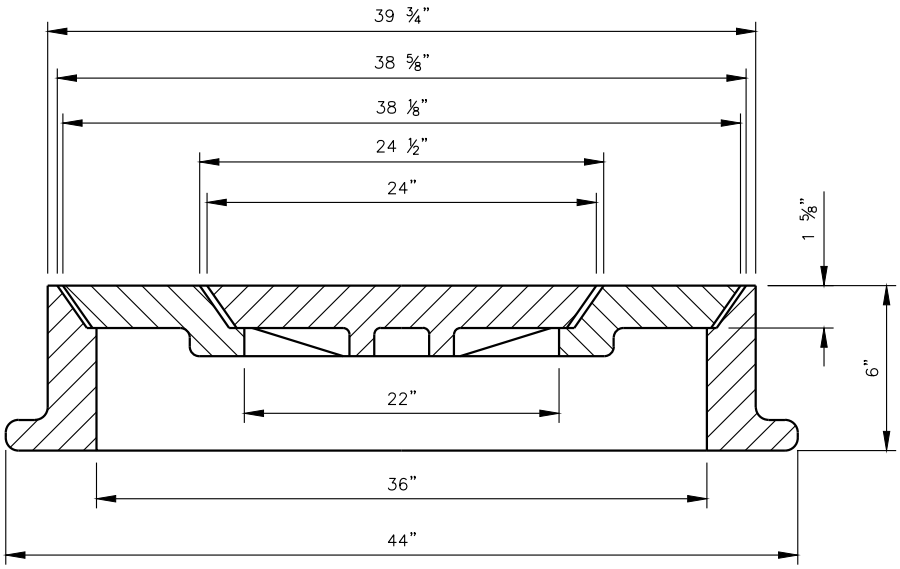

ELEVATION SECTION

NOT TO SCALE

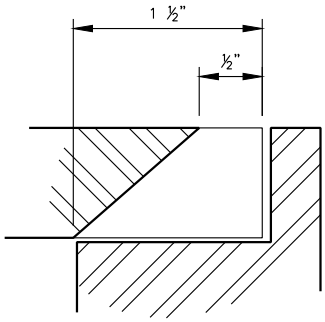

ELEVATION SECTION

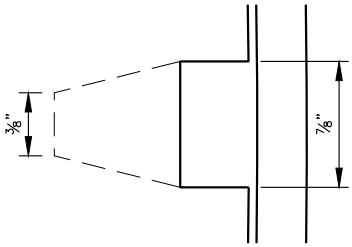

PLAN SECTION

PICK HOLE DETAIL

NOT TO SCALE

NOTES:

1. CAST IRON FOR FRAME AND COVER SHALL BE CLASS 30 MINIMUM AS PER ASTM A-48.
2. RAISED LETTERS 1/4" HIGH TO BE CAST IN CENTER OF MANHOLE COVER.
3. MINOR MODIFICATIONS IN ABOVE DIMENSIONS AND MANUFACTURING CONFIGURATIONS ARE PERMISSIBLE SUBJECT TO DISTRICT APPROVAL.
4. BEFORE LEAVING THE FOUNDRY, THE FRAME AND COVERS SHALL BE PAINTED OR DIPPED IN ASPHALT PAINT.
5. MANHOLE FRAME AND COVER SHALL BE AS MANUFACTURED BY SOUTH BAY FOUNDRY, 42 N. CLUFF AVE., LODI, CA 95240, OR APPROVED EQUAL.
6. FRAME AND COVER BEARING SURFACES SHALL BE MACHINED TO ASSURE CLOSE, QUIET FIT.

Date 3/15/17 Detail No. 11 Approved By PAUL R. ELDREDGE, RCE 60211	UNION SANITARY DISTRICT	36" DIAMETER MANHOLE FRAME AND COVER	11

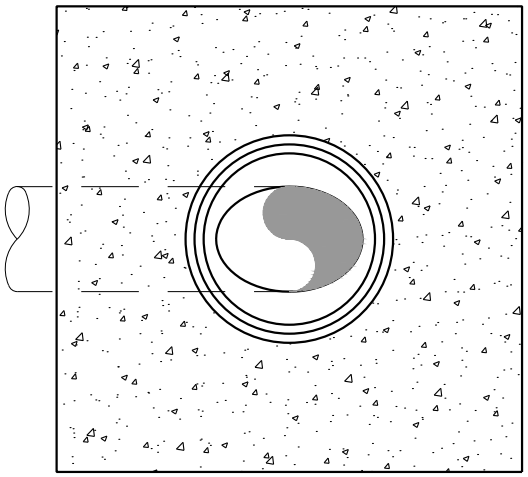

PLAN SECTION WITHOUT LID

NOT TO SCALE

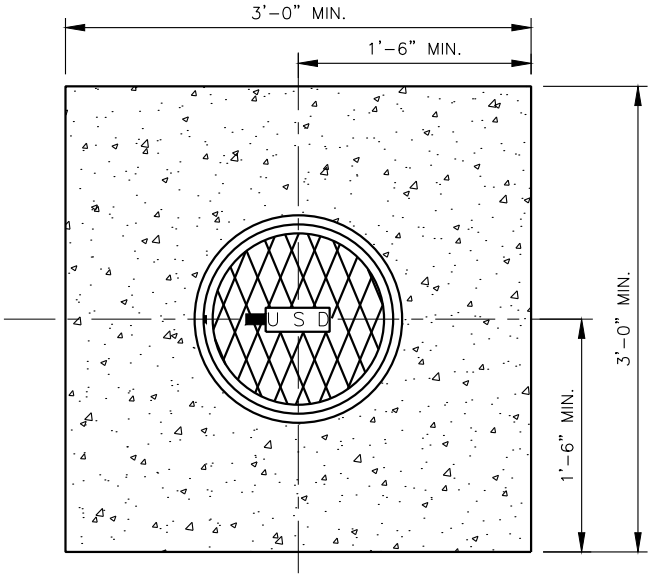

PLAN SECTION

NOT TO SCALE

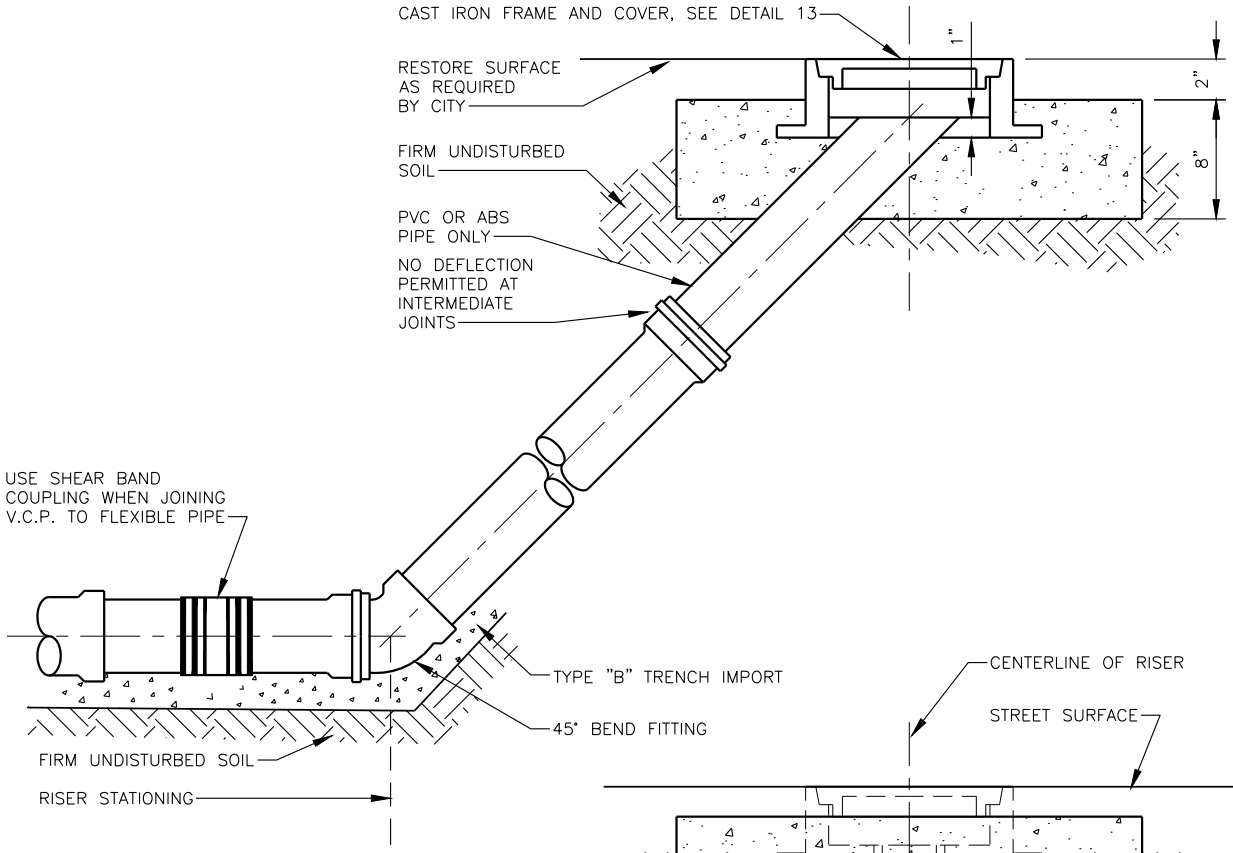

SIDE ELEVATION SECTION

NOT TO SCALE

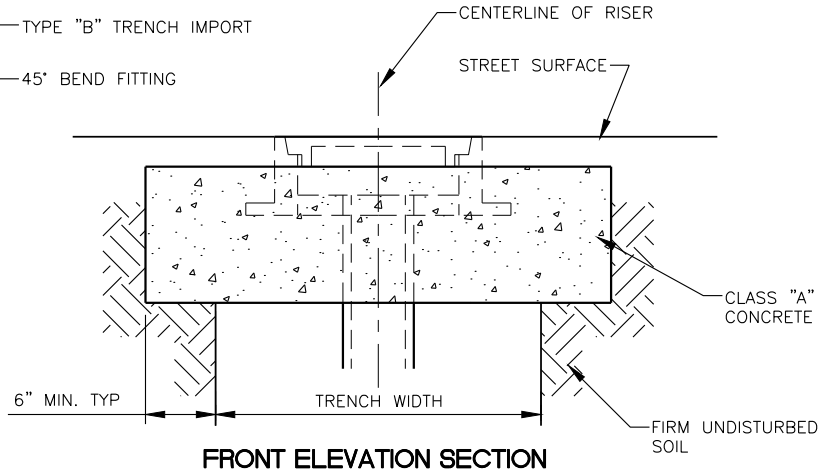

FRONT ELEVATION SECTION

NOT TO SCALE

NOTES:

1. THIS DETAIL IS ONLY APPLICABLE FOR REPLACING EXISTING RISERS, IF APPROVED BY DISTRICT ENGINEER.
2. THIS DETAIL IS NOT INTENDED TO BE USED FOR CONSTRUCTION OF NEW SEWER SYSTEMS.

Date 3/15/17 Detail No. 12 Approved By PAUL R. ELDREDGE, RCE 60211	UNION SANITARY DISTRICT	RISER	12

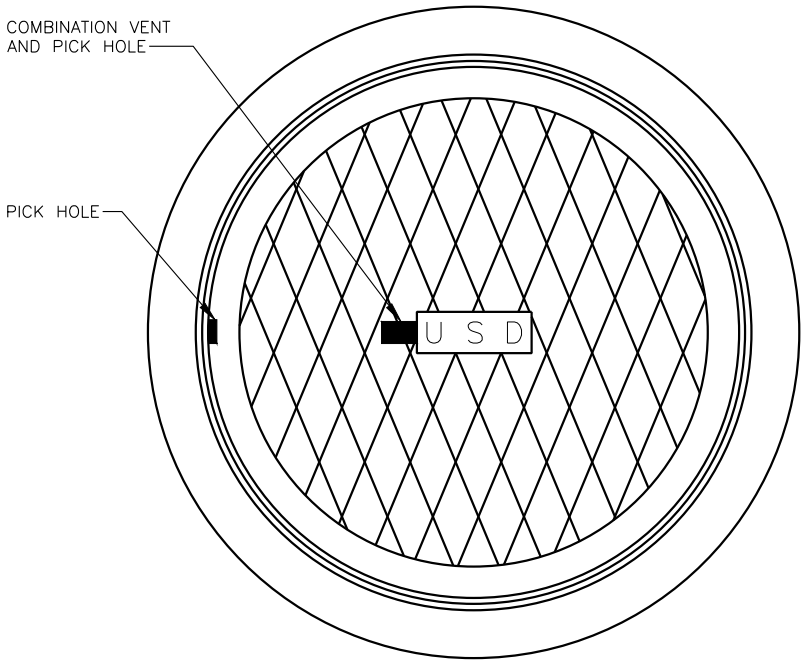

PLAN SECTION

NOT TO SCALE

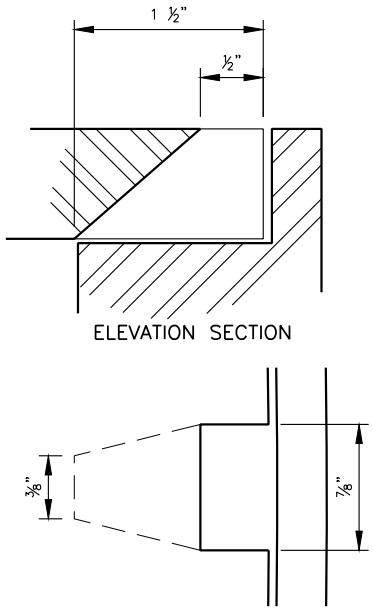

PICK HOLE DETAIL

NOT TO SCALE

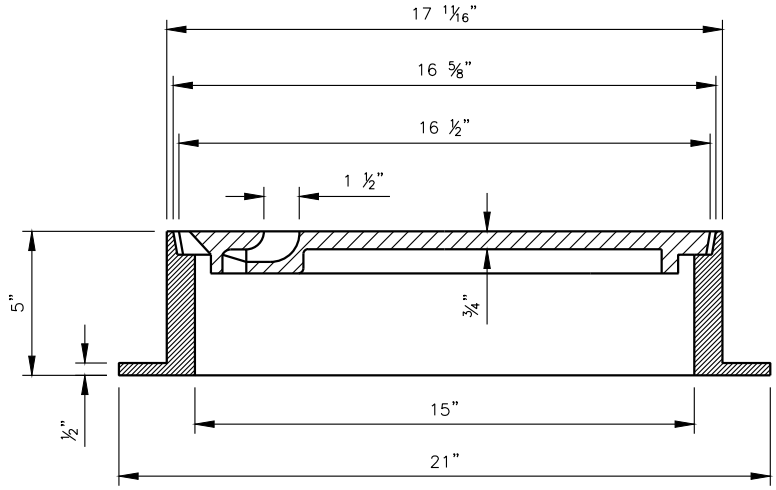

ELEVATION SECTION

NOT TO SCALE

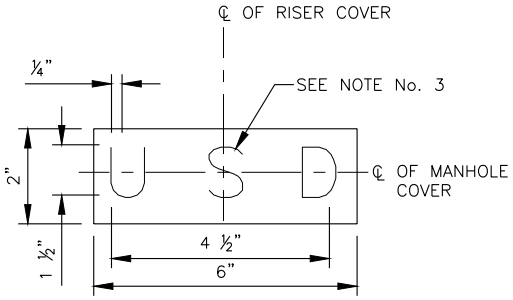

LETTERING DETAIL

NOTES:

1. MINOR MODIFICATIONS IN ABOVE DIMENSIONS AND MANUFACTURING CONFIGURATIONS ARE PERMISSIBLE SUBJECT TO DISTRICT APPROVAL.
2. CAST IRON FOR FRAME AND COVER SHALL BE CLASS 30 MINIMUM AS PER ASTM A-48.
3. RAISED LETTERS 1/4" HIGH TO BE CAST IN CENTER OF MANHOLE COVER.
4. BEFORE LEAVING THE FOUNDRY, THE FRAME AND COVER SHALL BE PAINTED OR DIPPED IN ASPHALT PAINT.
5. SEE UNION SANITARY DISTRICT STANDARD DETAIL NO. 12 FOR INSTALLATION REQUIREMENTS.
6. MANHOLE FRAME AND COVER SHALL BE AS MANUFACTURED BY SOUTH BAY FOUNDRY, 42 N. CLUFF AVE., LODI, CA 95240, OR APPROVED EQUAL.
7. FRAME AND COVER BEARING SURFACES SHALL BE MACHINED TO ASSURE CLOSE, QUIET FIT.

Date 3/15/17 Detail No. 13 Approved By PAUL R. ELDREDGE, RCE 60211	UNION SANITARY DISTRICT	RISER FRAME AND COVER FOR 6", 8" AND 10" DIAMETER PIPE	13

NOTES:

1. DO NOT INSTALL A STANDARD CLEANOUT IF THE LENGTH BETWEEN THE STANDARD CLEANOUT AND THE TWO-WAY CLEANOUT IS 50' OR LESS.
2. THE SEWER SHALL BE LAID ON A STRAIGHT GRADE BETWEEN THE MAIN SEWER AND THE PROPERTY LINE AND BETWEEN THE PROPERTY LINE AND BUILDING PLUMBING.

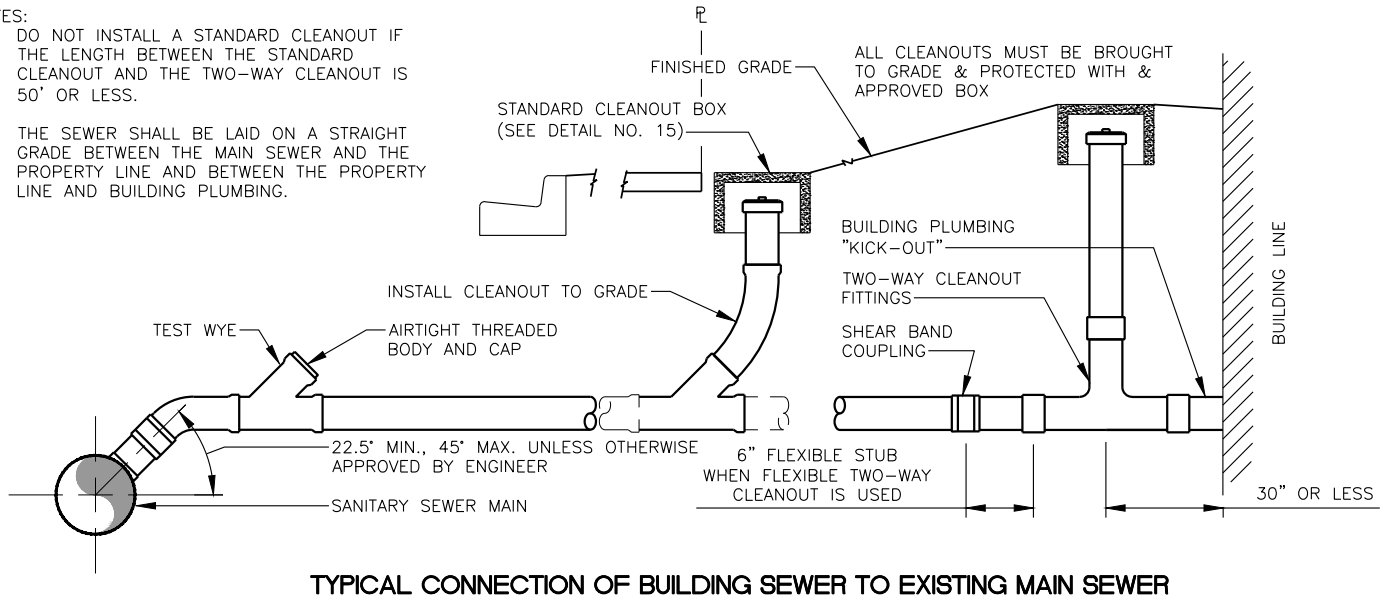

TYPICAL CONNECTION OF BUILDING SEWER TO EXISTING MAIN SEWER

NOT TO SCALE

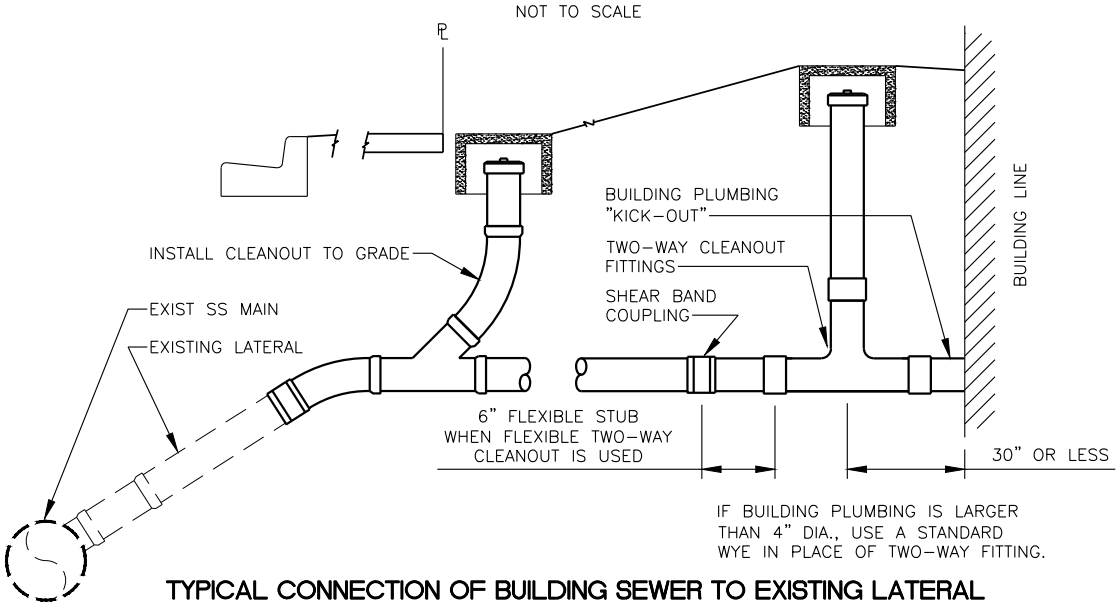

TYPICAL CONNECTION OF BUILDING SEWER TO EXISTING LATERAL

NOT TO SCALE

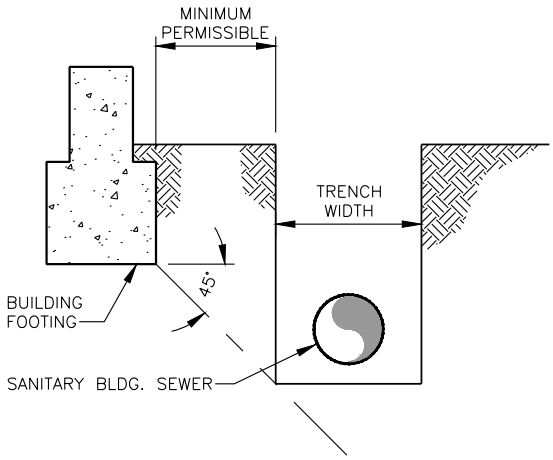

DETAIL - BUILDING SEWER ADJACENT TO BUILDING FOOTING

NOT TO SCALE

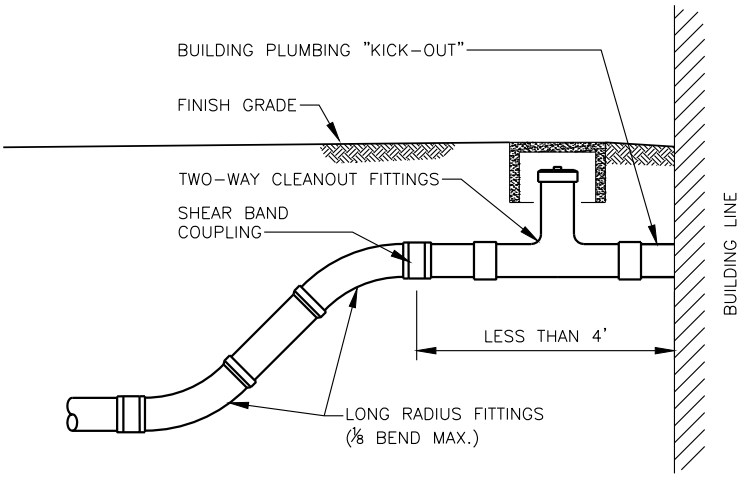

TYPICAL CONNECTION TO BUILDING SEWER FOR SHALLOW BUILDING PLUMBING "KICK-OUT"

NOT TO SCALE

Date 3/15/17 Detail No. 14A Approved By PAUL R. ELDREDGE, RCE 60211	UNION SANITARY DISTRICT	BUILDING SEWER DETAILS	14A

NOTES:

1. THIS DETAIL MAY APPLY WHEN PROPERTY LINE IS 6' OR LESS FROM BUILDING AND THERE IS AN END RUN CLEANOUT IN THE BUILDING PLUMBING.
2. THE SEWER SHALL BE LAID ON A STRAIGHT GRADE BETWEEN THE MAIN SEWER AND THE PROPERTY LINE.
3. DO NOT INSTALL A PROPERTY LINE CLEANOUT IF THE LENGTH BETWEEN THE PROPERTY LINE AND THE COMBO WYE IS 50' OR LESS.

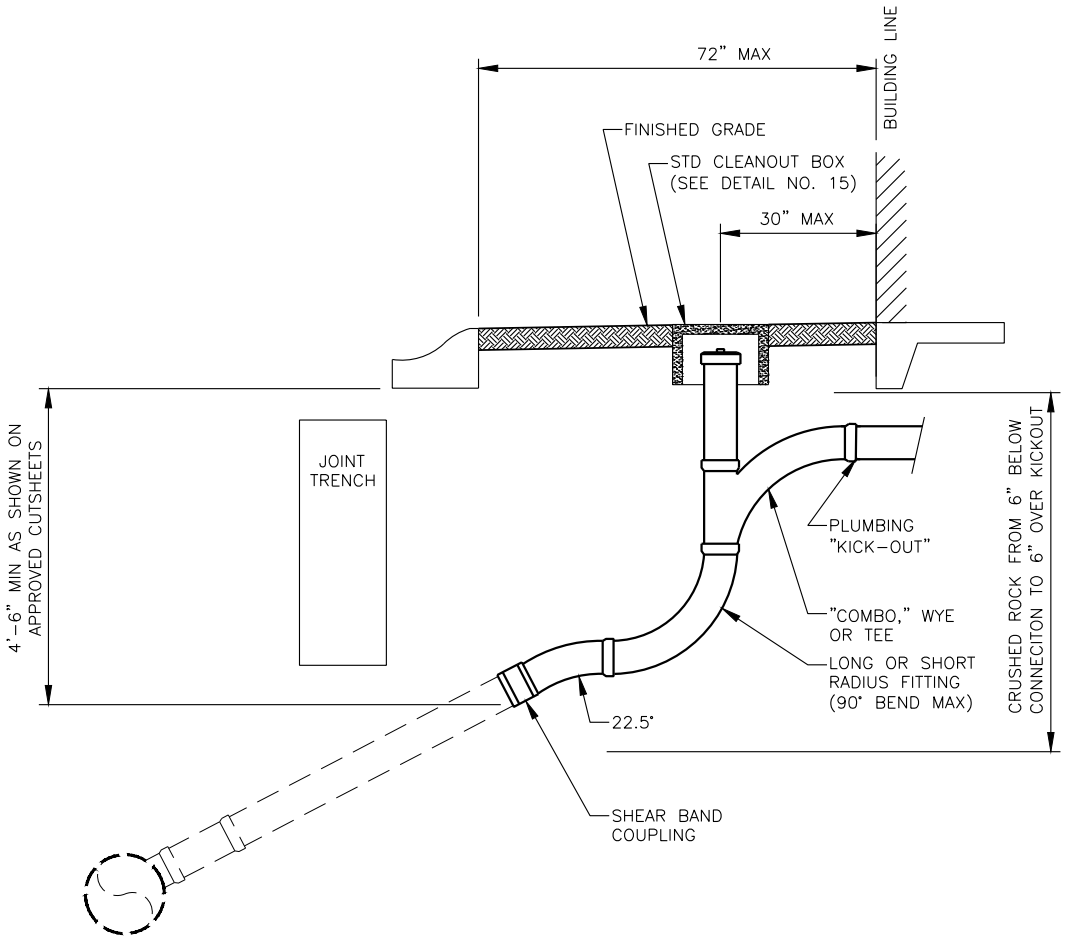

BUILDING SEWER CONNECTION
FOR ZERO LOT LINE BUILDING PLUMBING "KICK-OUT"

NOT TO SCALE

Date 3/15/17 Detail No. 14B Approved By PAUL R. ELDREDGE, RCE 60211	UNION SANITARY DISTRICT	BUILDING SEWER DETAILS ZERO LOT LINE CONNECTION	14B

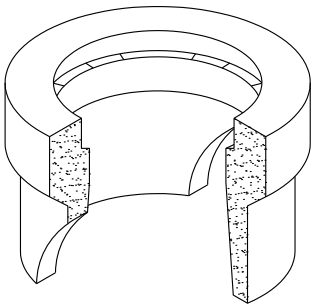

CIRCULAR CONCRETE BOX

NOT TO SCALE

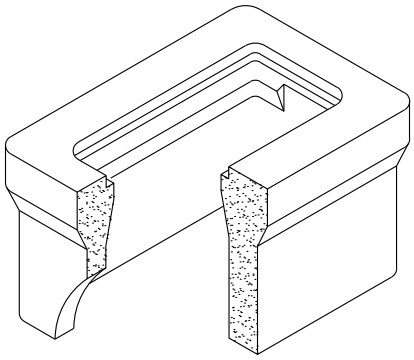

RECTANGULAR CONCRETE BOX

NOT TO SCALE

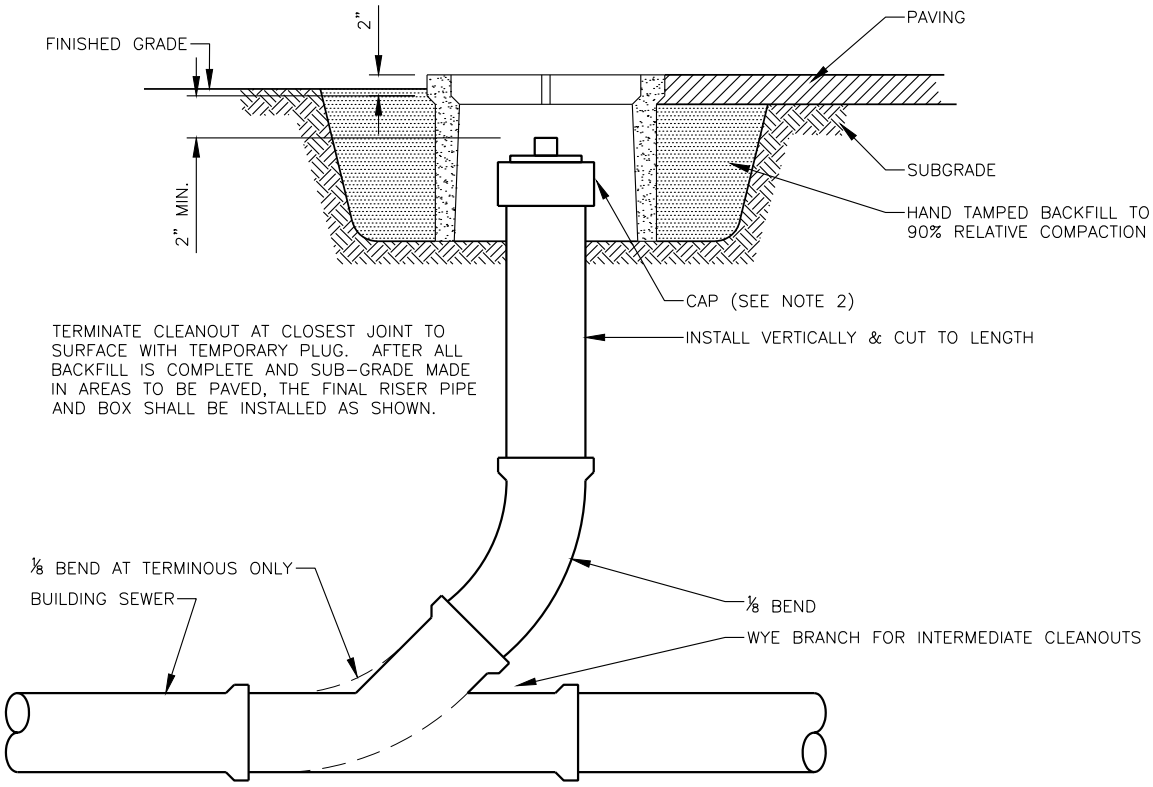

ELEVATION

NOT TO SCALE

NOTES:

1. RECTANGULAR OR CIRCULAR BOXES ARE PERMITTED.
2. CLEANOUT CAPS SHALL CONSIST OF AN AIRTIGHT THREADED BODY AND CAP.
3. CIRCULAR BOXES INSTALLED IN SIDEWALK AND WALKWAY AREAS SHALL HAVE A SOLID METAL COVER WITHOUT HOLES.
4. APPROVED RECTANGULAR BOXES ARE:
   a) CHRISTY CONCRETE PRODUCTS: B3 BOX WITH A B3D CONCRETE LID OR A B3C METAL LID OR
   b) BROOKS PRODUCTS, INC.: No. 3 METER BOX WITH A No. 3 HEAVY DUTY CONCRETE LID OR A No. 3 CAST IRON TRAFFIC LID. OR AN APPROVED EQUAL.
5. CONCRETE LIDS ARE ACCEPTABLE FOR USE IN LANDSCAPE AREAS, WHILE METAL LIDS MUST BE USED ELSEWHERE.
6. ALL CLEANOUT BOX LIDS SHALL BE MARKED WITH A LETTER "S" OR THE WORD "SEWER".

Date 3/15/17 Detail No. 15 Approved By PAUL R. ELDREDGE, RCE 60211	UNION SANITARY DISTRICT	STANDARD BUILDING SEWER CLEANOUT TO GRADE	15

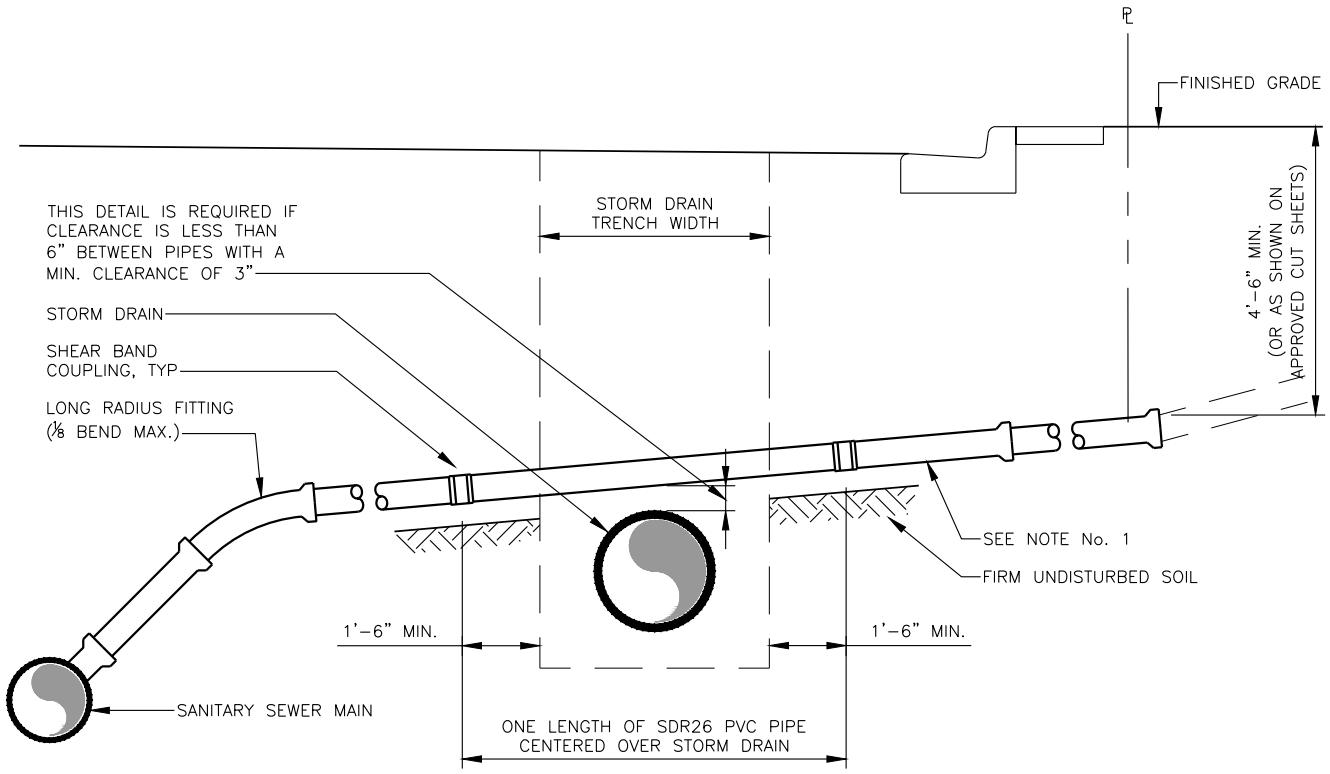

TYPICAL CROSSING OVER STORM DRAIN

NOT TO SCALE

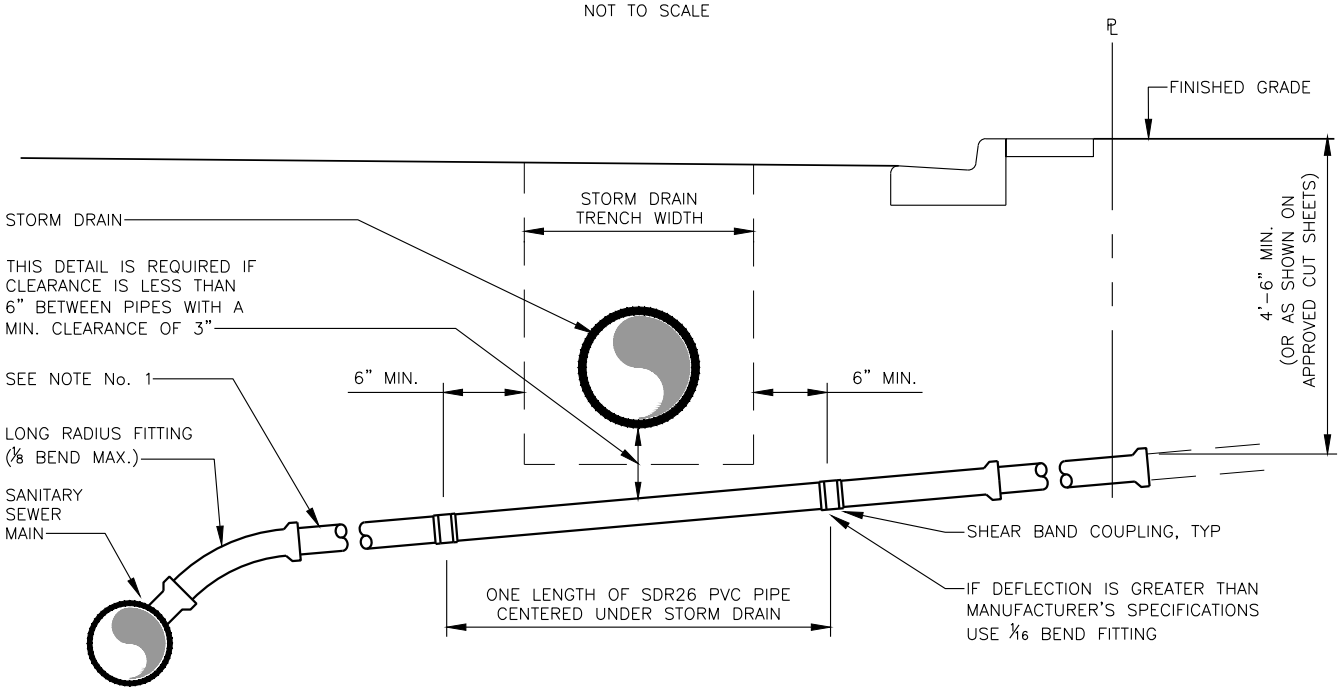

TYPICAL CROSSING UNDER STORM DRAIN

NOT TO SCALE

NOTES:

1. THE ABOVE DETAILS ARE TYPICAL FOR MAIN AND BUILDING SEWER WHEN VCP PIPE MATERIAL IS USED.
2. THIS TYPE OF CROSSING MAY BE REQUIRED BY UNION SANITARY DISTRICT WHEN CROSSING CERTAIN OTHER UTILITIES.
3. THE BOTTOM DETAIL IS TYPICAL FOR MAIN AND BUILDING SEWER WHEN PVC PIPE IS USED UNDER STORM SEWER PIPE 48 INCHES IN DIAMETER OR LARGER.

Date 3/15/17 Detail No. 16 Approved By PAUL R. ELDREDGE, RCE 60211	UNION SANITARY DISTRICT	SANITARY SEWER/STORM DRAIN CROSSING	16

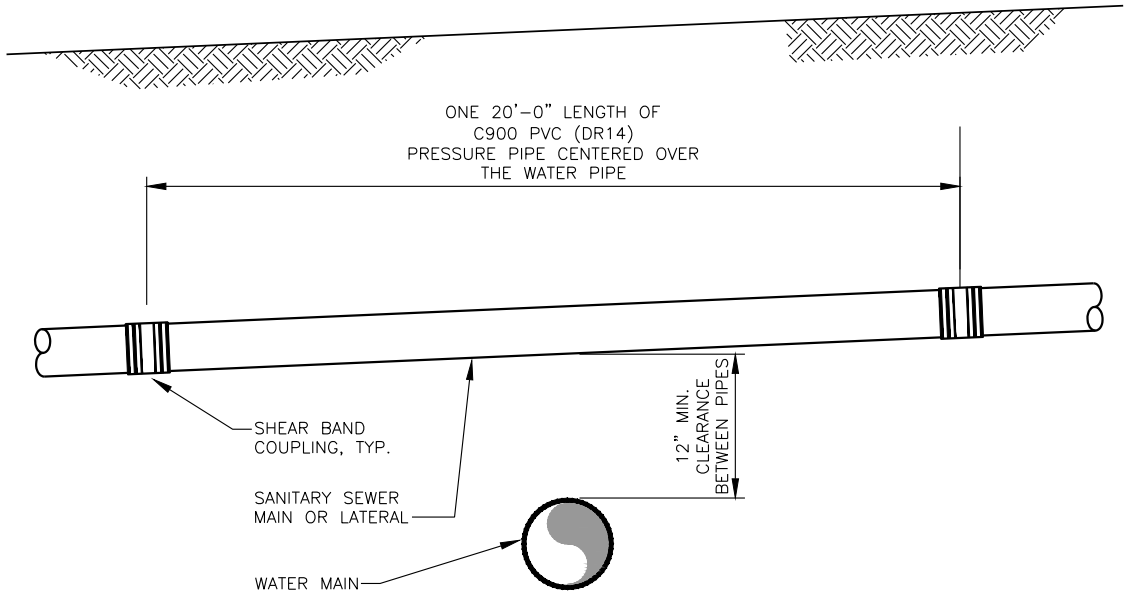

TYPICAL CROSSING OVER WATER MAIN

NOT TO SCALE

NOTE: REQUIRED WHENEVER A SANITARY SEWER MAIN OR LATERAL CROSSES OVER A WATER MAIN

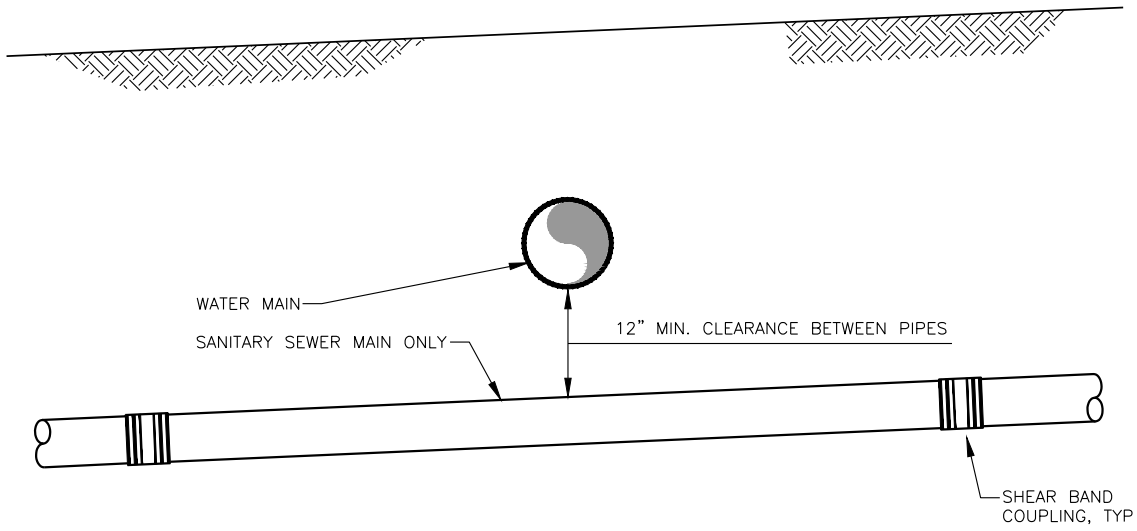

TYPICAL CROSSING UNDER WATER MAIN

NOT TO SCALE

Date 3/15/17 Detail No. 17 Approved By PAUL R. ELDREDGE, RCE 60211	UNION SANITARY DISTRICT	SANITARY SEWER/WATER MAIN CROSSING	17

PIPE COVER LIMITATION TABLE

PIPE SPECIFICATION – SEE SEC. 5			COVER IN FEET MIN – MAX**	
MATERIAL		TYPE AND MINIMUM CLASS	DETAIL A	DETAIL B
BUILDING SEWERS FROM PROPERTY LINE TO BUILDING IN UNPAVED PRIVATE PROPERTY				
4"–6"	VCP***		–	2.0 – 30
4"–6"	ABS	SOLID WALL	–	2.0 – 30
4"–6"	DIP	DUCTILE (CLASS 50 & 51)	–	0.5 – 30
4"–6"	PVC	SOLID WALL (C900–16 DR18)	–	1.0 – 30
4"–6"	PVC	SOLID WALL (CLASS SDR26)	–	2.0 – 30
4"–6"	HDPE	SOLID WALL (CLASS SDR17)	–	1.0 – 30
BUILDING SEWERS IN PUBLIC UTILITY & U.S.D. EASEMENTS, PUBLIC RIGHTS OF WAY & PAVED PRIVATE PROPERTY				
4"–6"	VCP***		3.0 –19	–
4"–6"	DIP	DUCTILE (CLASS 50 & 51)	0.5 –30	–
4"–6"	ABS	SOLID WALL	3.0 –30	–
4"–6"	PVC	SOLID WALL (CLASS SDR26)	3.0 –30	–
4"–6"	PVC	SOLID WALL (C900–16 DR14)	1.0 –30	–
4"–6"	HDPE	SOLID WALL (CLASS SDR17)	1.0 –30	–
MAIN SEWERS IN PUBLIC UTILITY & U.S.D. EASEMENTS, PUBLIC RIGHTS OF WAY & PAVED PRIVATE PROPERTY				
8"–Larger	VCP***		3.0 –14	–
8"–Larger	DIP	DUCTILE (CLASS 50 & 51)	0.5 –30	–
8"–Larger	PVC	SOLID WALL (CLASS SDR26)	3.0 –30	–
8"–Larger	PVC	SOLID WALL (C900–16 DR14)	1.0 –30	–

**WHEN MAXIMUM COVER IS EXCEEDED, APPROVAL BY U.S.D. OF SPECIAL BEDDING REQUIREMENTS IS NECESSARY.
***ONLY ALLOWED WITH SPECIAL PERMISSION FROM DISTRICT ENGINEER.

MINIMUM SIZE AND SLOPE LIMITATION TABLE

SPECIFICATION – SEE SEC. 21 & 22			
PIPE DIAMETER	MINIMUM SLOPE (FT. PER FT.)	COMMENTS	MAXIMUM FIXTURE UNITS
BUILDING SEWER FROM SEWER MAIN TO BUILDING			
4"	0.020	IF MAIN IS NOT OF ADEQUATE DEPTH 0.01 FT/FT IS MINIMUM.	200
6"	0.005		600
6"	0.006		700
6"	0.007		800
6"	0.008		900
6"	0.009		1000
6"	0.010		1200
MAIN SEWERS			
8"	0.0034		——
10"	0.0026		——
12"	0.0020		——
15"	0.0015		——
18"	0.0012		——

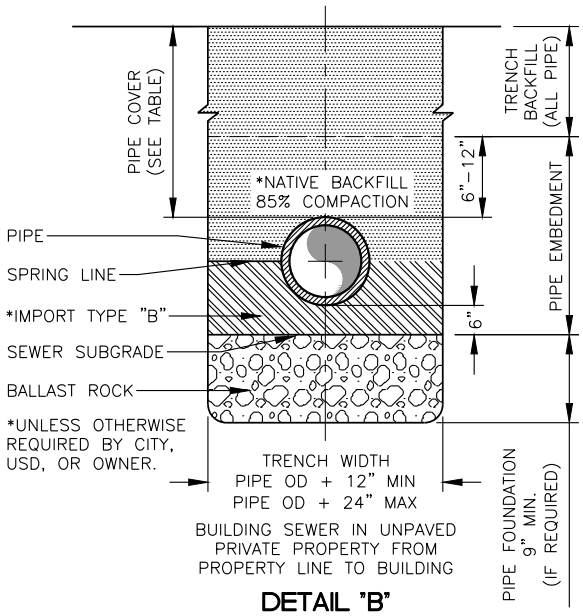

DETAIL "B"

NOT TO SCALE

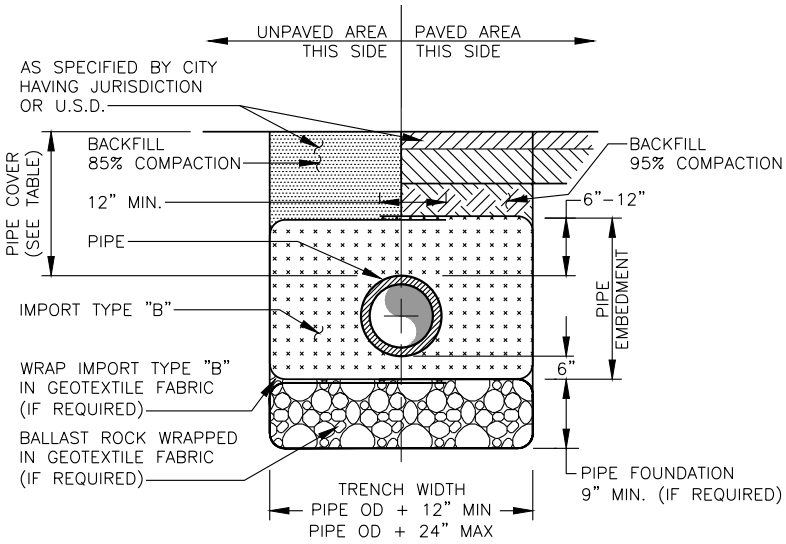

MAIN & BUILDING SEWERS IN PUBLIC UTILITY & USD EASEMENTS, PUBLIC RIGHTS OF WAY & PAVED PRIVATE PROPERTY

DETAIL "A"

NOT TO SCALE

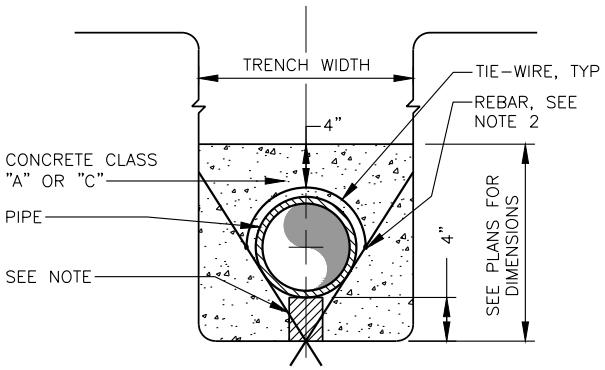

CONCRETE ENCASEMENT DETAIL

NOT TO SCALE

NOTES:
1. CONCRETE BLOCK OR BRICK ON FIRM UNDISTURBED GROUND BEFORE CONCRETE ENCASEMENT IS POURED.
2. INSTALL REBAR AS NECESSARY TO PREVENT PIPE FLOTATION DURING CONCRETE POUR.

Date 3/15/17 Detail No. 18A
Approved By PAUL R. ELDREDGE, RCE 60211

UNION SANITARY DISTRICT

SEWER PIPE INSTALLATION (COVER, SLOPE, SPECIAL BEDDING AND ENCASEMENT REQUIREMENTS)

18A

PIPE FOUNDATION (IF REQUIRED BY ENGINEER)

ROCK BALLAST:

ROCK BALLAST SHALL BE 1-½" BY ¾" GRAVEL CONFORMING TO THE FOLLOWING GRADATIONS:

SIEVE SIZE	PERCENT PASSING (BY WEIGHT)
2"	100
1-½"	95-100
¾"	5-30
⅜"	5-20
NO. 200	0-4

PIPE EMBEDMENT MATERIAL

IMPORT "TYPE A":

SHALL BE CREEK OR BANK GRAVEL, CRUSHED GRAVEL, CRUSHED ROCK, BANK RUN ROCK OR A MIXTURE OF THESE MATERIALS. RECLAIMED OR RECYCLED MATERIALS ARE NOT ACCEPTABLE.

THE MATERIAL SHALL BE FREE FROM ROOTS, VEGETABLE MATTER, OR OTHER DELETERIOUS SUBSTANCE AND SHALL BE OF SUCH NATURE AND SO GRADED THAT IT WILL BIND READILY WHEN WATERED AND COMPACTED TO THE REQUIREMENT SPECIFIED HEREIN.

THE MATERIAL SHALL BE OF SUCH SIZE THAT THE PERCENTAGE COMPOSITION BY WEIGHT, AS DETERMINED BY LABORATORY SIEVES, WILL CONFORM TO THE FOLLOWING GRADATIONS:

SIEVE SIZE	PERCENT PASSING (BY WEIGHT)
1"	100
¾"	90-100
NO. 4	35-100
NO. 30	10-30
NO. 200	2-9

THE MATERIAL SHALL ALSO HAVE A MINIMUM SAND EQUIVALENT OF 22 AND A MINIMUM RESISTENCE (R) VALUE OF 78.

IMPORT "TYPE B":

"TYPE B" IMPORT SHALL BE WASHED CRUSHED ROCK (CHIPS). THIS MATERIAL SHALL CONTAIN AT LEAST 75% OF THE PARTICLES HAVING ONE OR MORE FRACTURED FACES. NOT OVER 25% SHALL BE PIECES THAT SHOW NO SUCH FACES RESULTING FROM CRUSHING. ROCK WILL BE DESIGNATED BY NORMAL SIZE. RECLAIMED OR RECYCLED MATERIALS ARE NOT ACCEPTABLE.

THE MATERIAL SHALL BE OF SUCH SIZE THAT THE PERCENTAGE COMPOSITION BY WEIGHT, AS DETERMINED BY LABORATORY SIEVES WILL CONFORM TO THE FOLLOWING GRADATIONS:

SIEVE SIZE	PERCENT PASSING (BY WEIGHT)
1"	100
¾"	90-100
NO. 4	0-15
NO. 200	0-4

TRENCH EXCAVATION MATERIAL:

ACCEPTABLE TRENCH EXCAVATION MATERIAL SHALL BE THAT MATERIAL WHICH IS FREE FROM VEGETABLE MATTER AND REFUSE AND SHALL CONTAIN NO CONCRETE, STONES OR CLODS LARGER THAN ¾" IN DIAMETER AND SHALL CONTAIN SUFFICIENT FINES SO THAT ALL VOIDS WILL BE FILLED WHEN COMPACTED.

NOTE TO ENGINEER OR ARCHITECT
PROVIDE 3" ELEVATION DROP BETWEEN INLET AND OUTLET PIPES THROUGH BOX. SHOW PIPE INVERT ELEVATIONS AT INLET AND OUTLET ON PLAN.

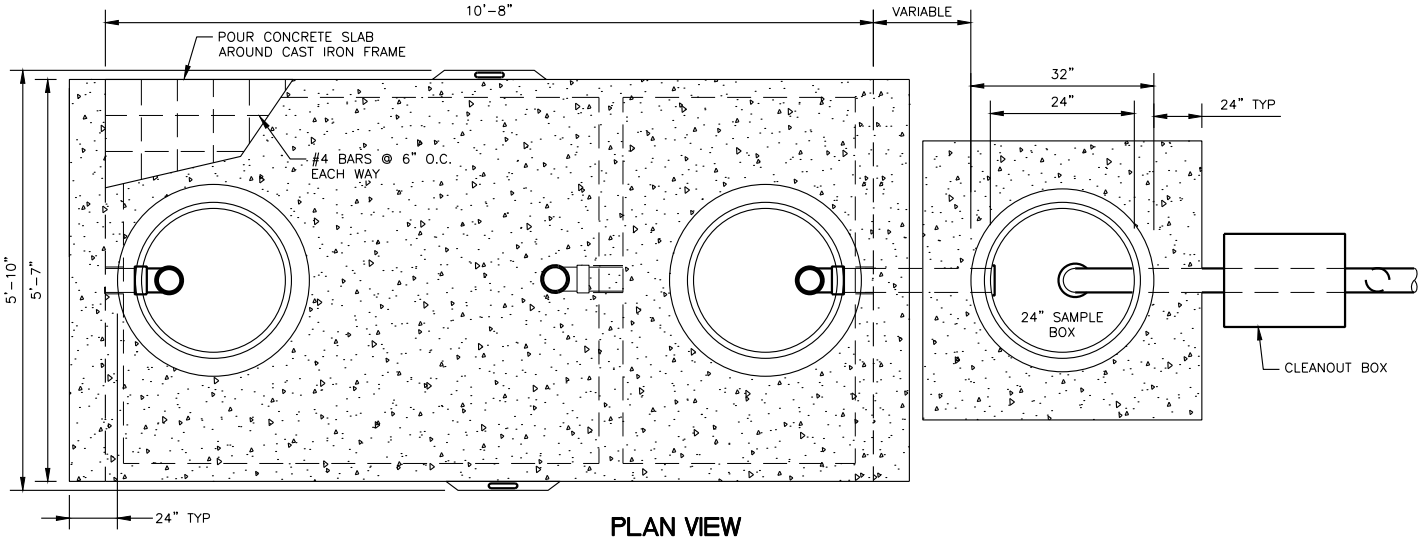

PLAN VIEW

NOT TO SCALE

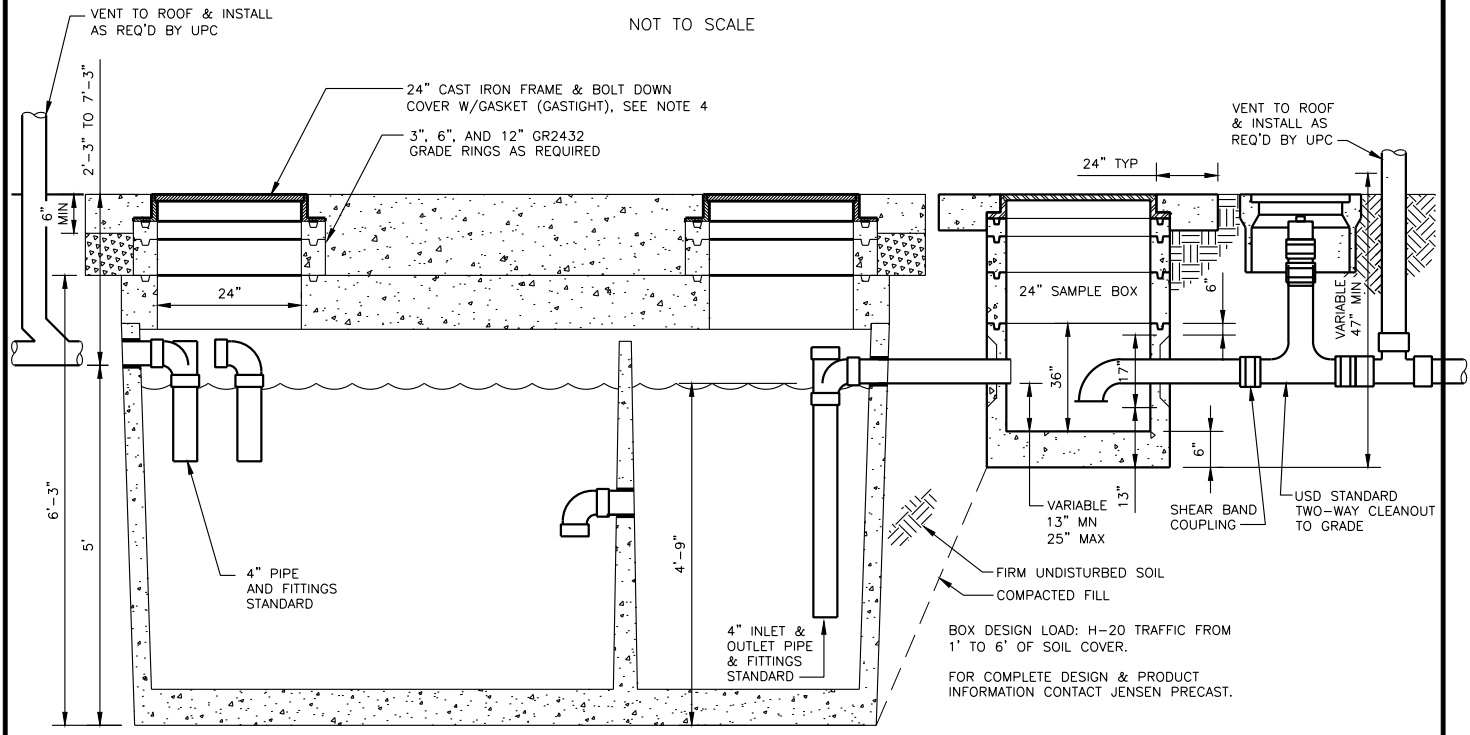

ELEVATION SECTION

NOT TO SCALE

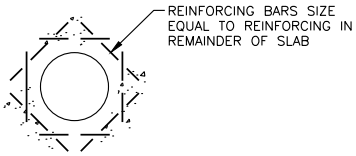

MANHOLE AREA REINFORCING DETAIL

NOT TO SCALE

NOTES:

1. DIMENSION AS SHOWN UNLESS OTHERWISE SPECIFIED BY USD.
2. JENSEN 1500 PRECAST BOXES AS MANUFACTURED BY JENSEN PRECAST OR AN APPROVED EQUAL.
3. ALL CONCRETE SHALL HAVE A MINIMUM COMPRESSIVE STRENGTH OF 3000 PSI AT 28 DAYS.
4. CIRCULAR LIDS SHALL BE SOUTH BAY FOUNDRY 1900-BD OR APPROVED EQUAL, WITH RAISED "S" OR "SANITARY SEWER".
5. TANK TO BE PLACED ON TYPE "B" IMPORT.
6. HEIGHT OF TANK ABOVE FITTINGS IS VARIABLE, 6 OR 12 INCH SECTIONS MAY BE ADDED TO REACH THE REQUIRED FINISHED GRADE. MORTAR AND BAND BOTH SIDES IN FIELD.
7. ALL CONCRETE JOINTS SHALL BE CLEANED, WETTED AND MORTARED PRIOR TO SETTING NEXT SECTION. THE JOINTS SHALL BE PACKED, TROWELED AND BANDED SMOOTH ON BOTH SIDES OF THE BOX.

Date 3/15/17 Detail No. 19 Approved By PAUL R. ELDREDGE, RCE 60211	UNION SANITARY DISTRICT	SAND/OIL/WATER SEPARATOR	19

NOTE TO ENGINEER OR ARCHITECT
PROVIDE 3" ELEVATION DROP BETWEEN INLET AND OUTLET PIPES THROUGH BOX. SHOW PIPE INVERT ELEVATIONS AT INLET AND OUTLET ON PLAN.

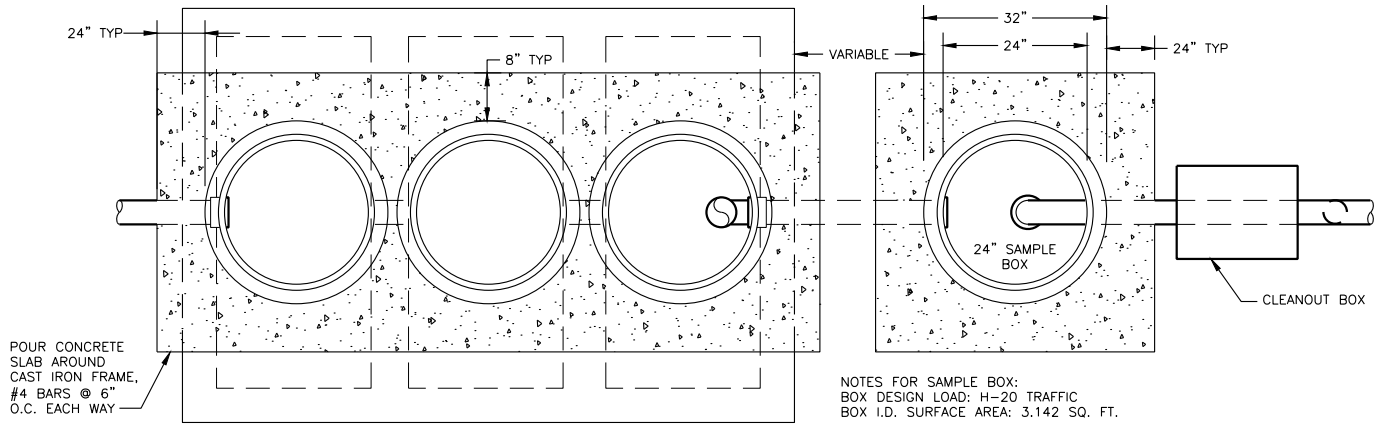

NOTES FOR SAMPLE BOX:
BOX DESIGN LOAD: H-20 TRAFFIC
BOX I.D. SURFACE AREA: 3.142 SQ. FT.

SAMPLE BOX MUST BE PLACED ON SUITABLE EARTH IN TRAFFIC CONDITION. FOR COMPETE DESIGN & PRODUCT INFORMATION CONTACT JENSEN PRECAST

PLAN VIEW

NOT TO SCALE

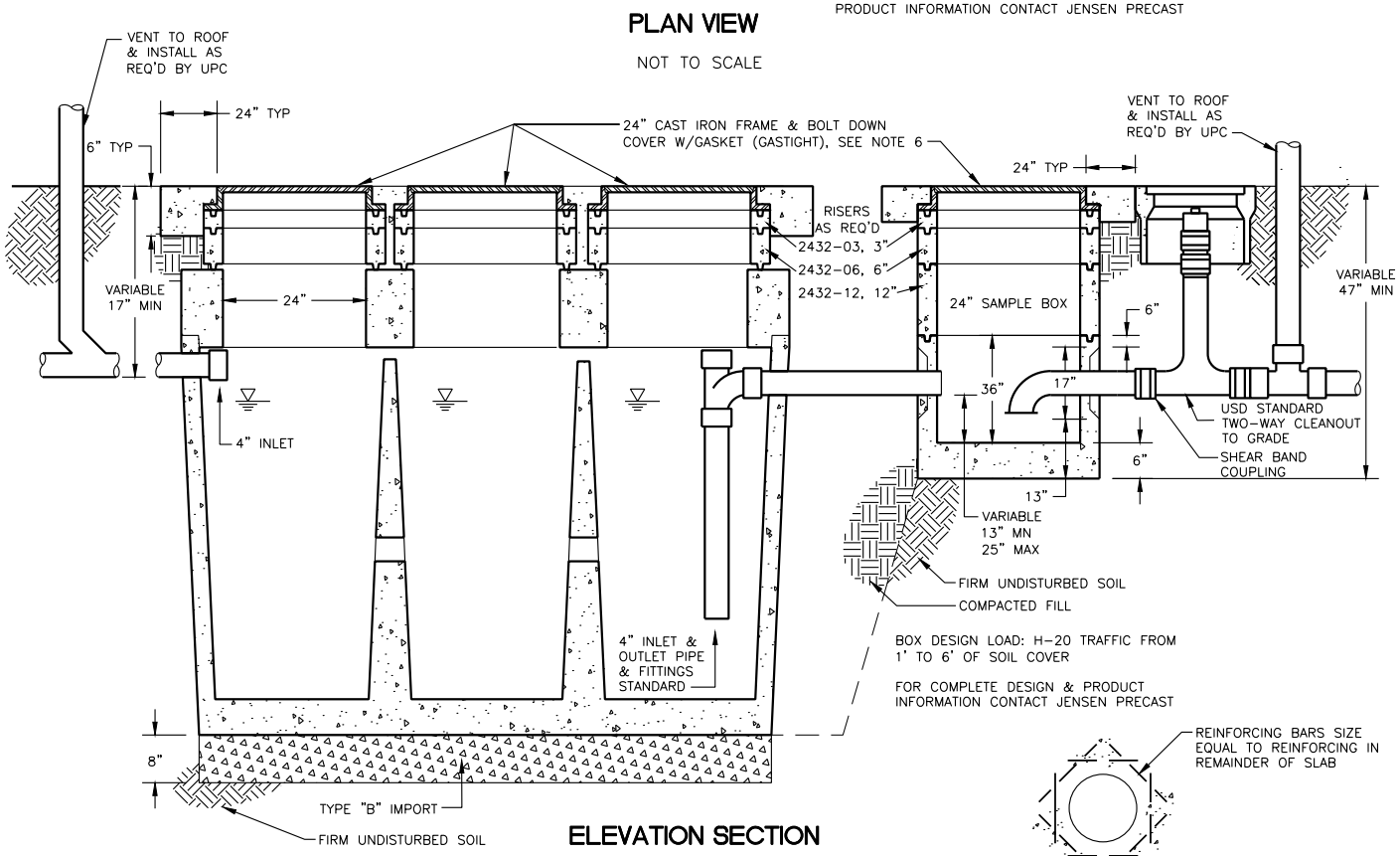

BOX DESIGN LOAD: H-20 TRAFFIC FROM 1' TO 6' OF SOIL COVER

FOR COMPLETE DESIGN & PRODUCT INFORMATION CONTACT JENSEN PRECAST

ELEVATION SECTION

NOT TO SCALE

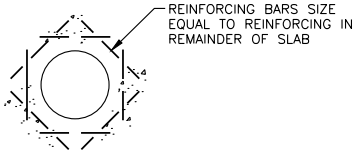

MANHOLE AREA REINFORCING DETAIL

NOT TO SCALE

NOTES:

1. ALL CONCRETE SHALL HAVE A MINIMUM COMPRESSIVE STRENGTH OF 3000 PSI AT 28 DAYS.
2. CIRCULAR LIDS SHALL BE SOUTH BAY FOUNDRY 1900-BD OR APPROVED EQUAL, WITH RAISED "S" OR "SANITARY SEWER".
3. TANK TO BE PLACED ON TYPE "B" IMPORT.
4. HEIGHT OF TANK ABOVE FITTINGS IS VARIABLE, 6 OR 12 INCH SECTIONS MAY BE ADDED TO REACH THE REQUIRED FINISHED GRADE. MORTAR AND BAND BOTH SIDES IN FIELD.
5. ALL CONCRETE JOINTS SHALL BE CLEANED, WETTED AND MORTARED PRIOR TO SETTING NEXT SECTION. THE JOINTS SHALL BE PACKED, TROWELED AND BANDED SMOOTH ON BOTH SIDES OF THE BOX.
6. BOLT EACH OF THE THREE (3) COMPARTMENT COVERS DOWN TO FRAME WITH NOT LESS THAN TWO (2) 7/16" HEX HEAD STEEL BOLTS.
7. UNLESS OTHERWISE APPROVED BY THE CITY OF JURISDICTION, A VENT WILL BE REQUIRED ON THE INLET SIDE OF THE INTERCEPTOR WHEN ITS DISTANCE FROM THE VENT SYSTEM WITHIN THE BUILDING IS GREATER THAN 10 FEET. VENT PIPES ON THE INLET SIDE AND THE OUTLET SIDE MAY BE INSTALLED SEPARATELY OR COMBINED IN CONFORMANCE WITH THE UNIFORM PLUMBING CODE.
8. STRUCTURE SHALL BE MANUFACTURED BY JENSEN PRECAST OR APPROVED EQUAL.
9. PLUMBING THROUGH THE INTERCEPTOR SHALL MATCH LATERAL SIZE.
10. SEE JENSEN PRECAST, OR APPORVED EQUAL, FOR DIMENSIONS OR EQUIVALENT TANK WITH PRIOR APPROVAL OF THE ENGINEER. MAXIMUM TANK SIZE SHALL BE 3,000 GALLONS. MULTIPLE TANKS SHALL BE USED FOR INTERCEPTORS REQUIRING MORE THAN 3,000 GALLON VOLUME.

Date 3/15/17 Detail No. 20 Approved By Paul R. Eldredge PAUL R. ELDREDGE, RCE 60211	UNION SANITARY DISTRICT	CLARIFIER	20

NOTE TO ENGINEER OR ARCHITECT
PROVIDE 3" ELEVATION DROP BETWEEN INLET AND OUTLET PIPES THROUGH BOX. SHOW PIPE INVERT ELEVATIONS AT INLET AND OUTLET ON PLAN.

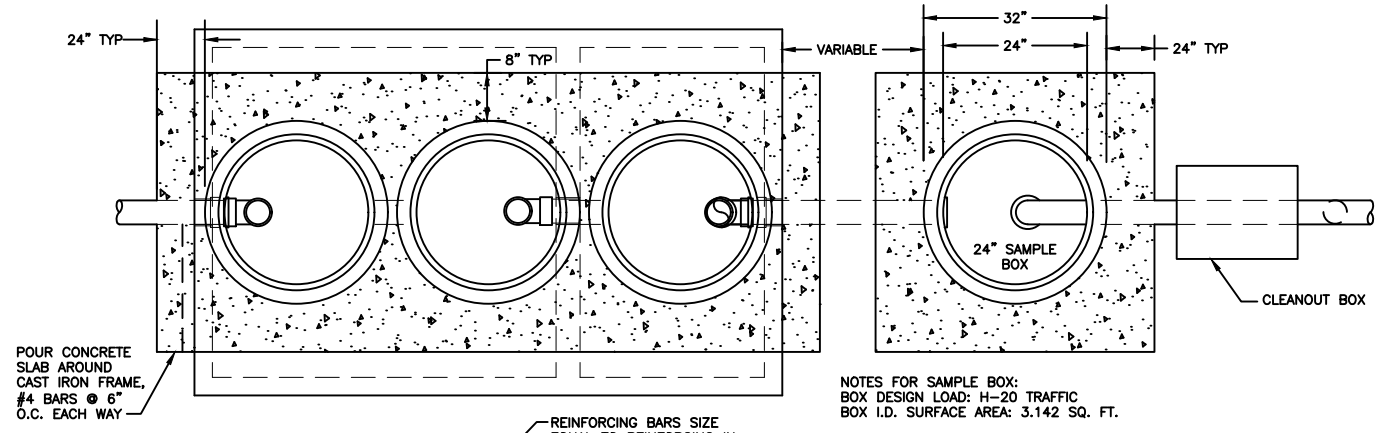

NOTES FOR SAMPLE BOX:
BOX DESIGN LOAD: H-20 TRAFFIC
BOX I.D. SURFACE AREA: 3.142 SQ. FT.

SAMPLE BOX MUST BE PLACED ON SUITABLE EARTH IN TRAFFIC CONDITION. FOR COMPETE DESIGN & PRODUCT INFORMATION CONTACT JENSEN PRECAST

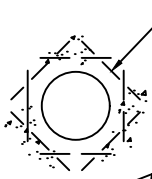

PLAN VIEW

NOT TO SCALE

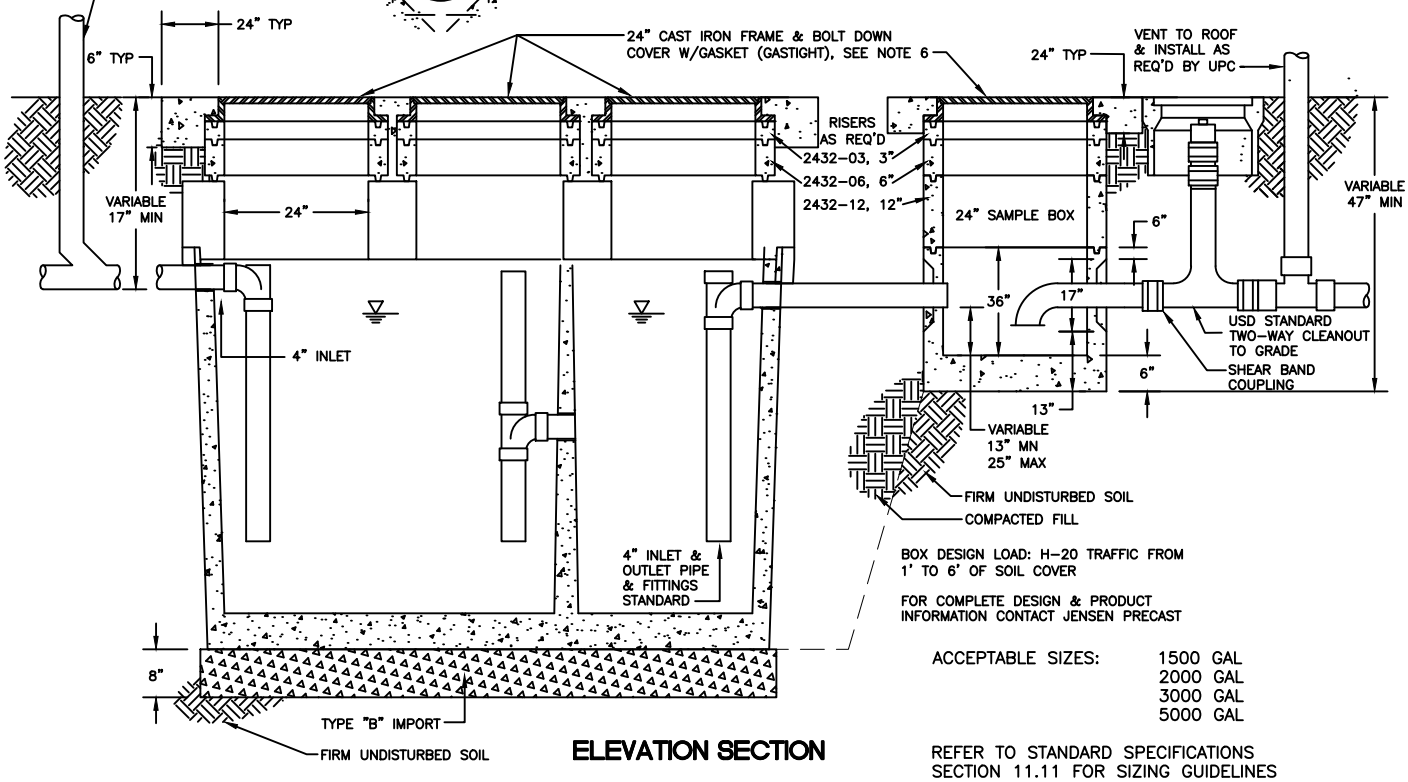

BOX DESIGN LOAD: H-20 TRAFFIC FROM 1' TO 6' OF SOIL COVER

FOR COMPLETE DESIGN & PRODUCT INFORMATION CONTACT JENSEN PRECAST

ACCEPTABLE SIZES: 1500 GAL
2000 GAL
3000 GAL
5000 GAL

ELEVATION SECTION

NOT TO SCALE

REFER TO STANDARD SPECIFICATIONS SECTION 11.11 FOR SIZING GUIDELINES

NOTES:

1. ALL CONCRETE SHALL HAVE A MINIMUM COMPRESSIVE STRENGTH OF 3000 PSI AT 28 DAYS.
2. CIRCULAR LIDS SHALL BE SOUTH BAY FOUNDRY 1900-BD OR APPROVED EQUAL, WITH RAISED "S" OR "SANITARY SEWER".
3. TANK TO BE PLACED ON TYPE "B" IMPORT.
4. HEIGHT OF TANK ABOVE FITTINGS IS VARIABLE, 6 OR 12 INCH SECTIONS MAY BE ADDED TO REACH THE REQUIRED FINISHED GRADE. MORTAR AND BAND BOTH SIDES IN FIELD.
5. ALL CONCRETE JOINTS SHALL BE CLEANED, WETTED AND MORTARED PRIOR TO SETTING NEXT SECTION. THE JOINTS SHALL BE PACKED, TROWELED AND BANDED SMOOTH ON BOTH SIDES OF THE BOX.
6. BOLT EACH OF THE THREE (3) COMPARTMENT COVERS DOWN TO FRAME WITH NOT LESS THAN TWO (2) 7/16" HEX HEAD STEEL BOLTS.
7. UNLESS OTHERWISE APPROVED BY THE CITY OF JURISDICTION, A VENT WILL BE REQUIRED ON THE INLET SIDE OF THE INTERCEPTOR WHEN ITS DISTANCE FROM THE VENT SYSTEM WITHIN THE BUILDING IS GREATER THAN 10 FEET. VENT PIPES ON THE INLET SIDE AND THE OUTLET SIDE MAY BE INSTALLED SEPARATELY OR COMBINED IN CONFORMANCE WITH THE UNIFORM PLUMBING CODE.
8. STRUCTURE SHALL BE MANUFACTURED BY JENSEN PRECAST OR APPROVED EQUAL.
9. PLUMBING THROUGH THE INTERCEPTOR SHALL MATCH LATERAL SIZE.
10. SEE JENSEN PRECAST, OR APPROVED EQUAL, FOR DIMENSIONS OR EQUIVALENT TANK WITH PRIOR APPROVAL OF THE ENGINEER. MAXIMUM TANK SIZE SHALL BE 5,000 GALLONS. MULTIPLE TANKS SHALL BE USED FOR INTERCEPTORS REQUIRING MORE THAN 5,000 GALLON VOLUME.

Date 3/15/17 Detail No. 21 Approved By PAUL R. ELDREDGE, RCE 60211	UNION SANITARY DISTRICT	GREASE INTERCEPTOR	21

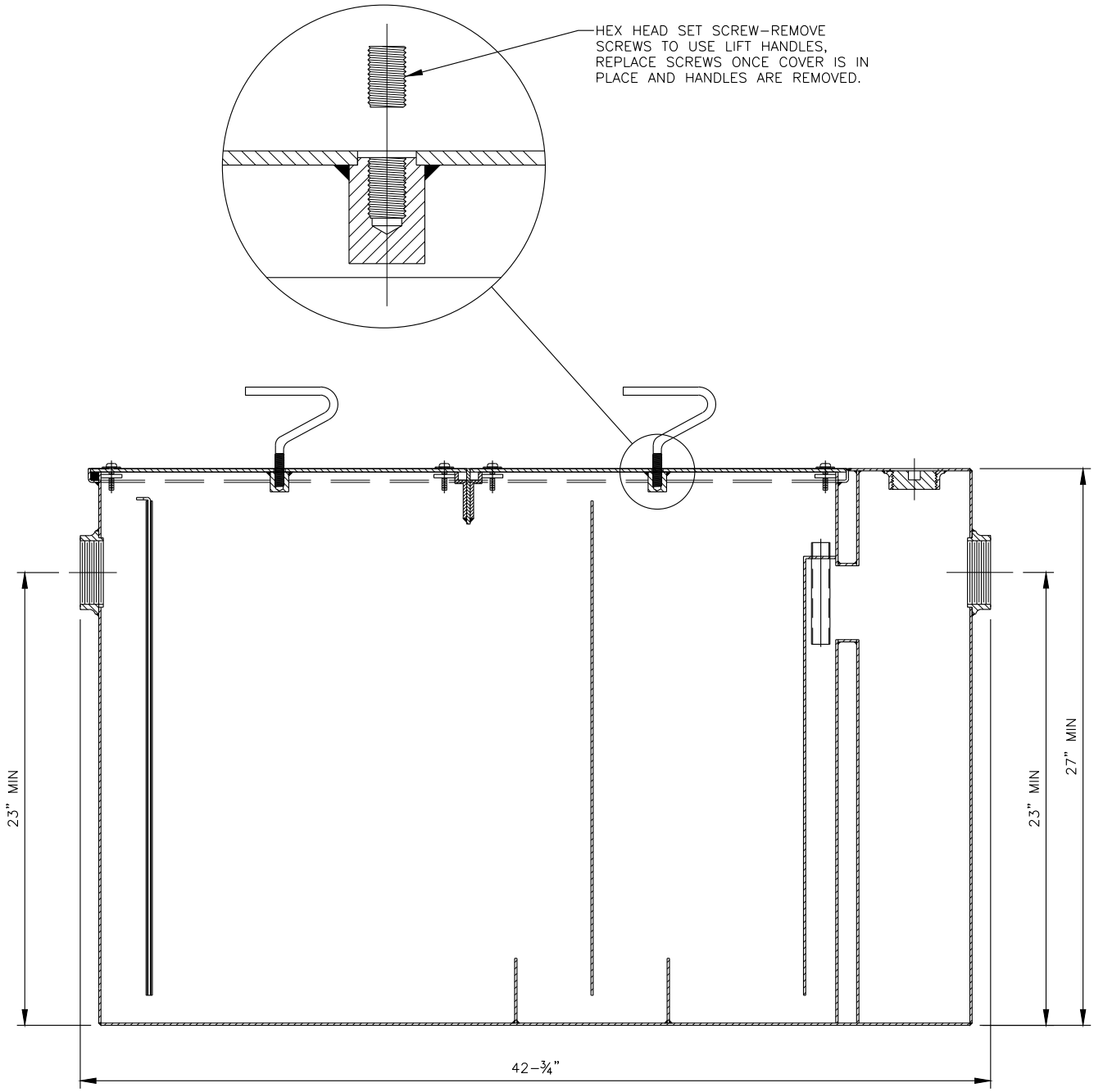

NOTES:

1. GREASE TRAP SHALL BE TWO COMPARTMENT WITH ACID RESISTANT COATED INTERIOR AND AN EXTERIOR FABRICATED STEEL DEVICE.
2. SHALL BE Z1172 MANUFACTURED BY ZURN OR AN APPROVED EQUAL.
3. SHALL BE SIZED FOR A MINIMUM GREASE CAPACITY OF 200 LBS.

Date 3/15/17 Detail No. 22 Approved By PAUL R. ELDREDGE, RCE 60211	UNION SANITARY DISTRICT	GREASE TRAP	22

NOTE TO ENGINEER OR ARCHITECT
PROVIDE 3" ELEVATION DROP BETWEEN INLET AND OUTLET PIPES THROUGH BOX. SHOW PIPE INVERT ELEVATIONS AT INLET AND OUTLET ON PLAN.

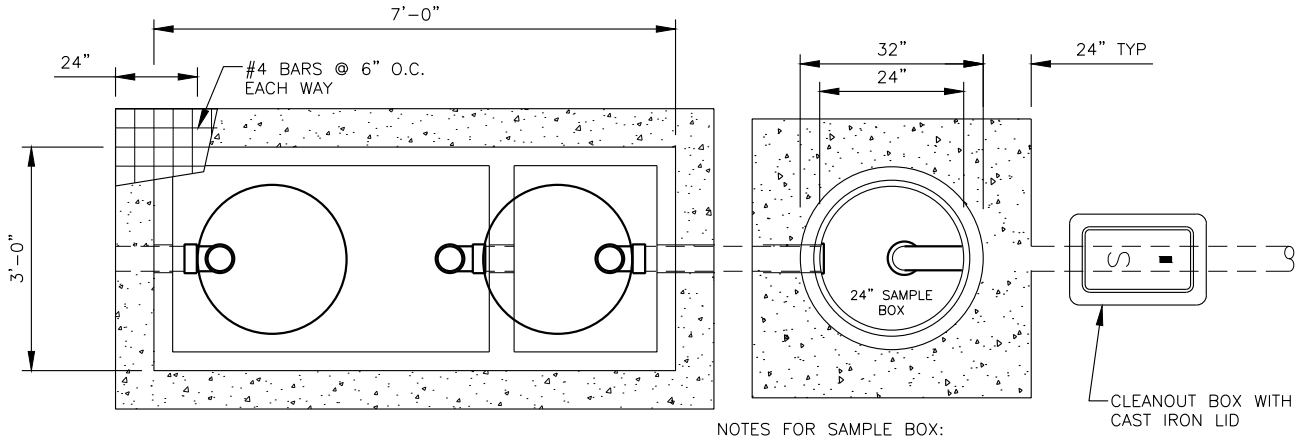

TOP VIEW
(COVERS & RINGS REMOVED)

NOTES FOR SAMPLE BOX:
BOX DESIGN LOAD: H-20 TRAFFIC
BOX I.D. SURFACE AREA: 3.142 SQ. FT.

SAMPLE BOX MUST BE PLACED ON SUITABLE EARTH IN TRAFFIC CONDITION. FOR COMPETE DESIGN & PRODUCT INFORMATION CONTACT JENSEN PRECAST

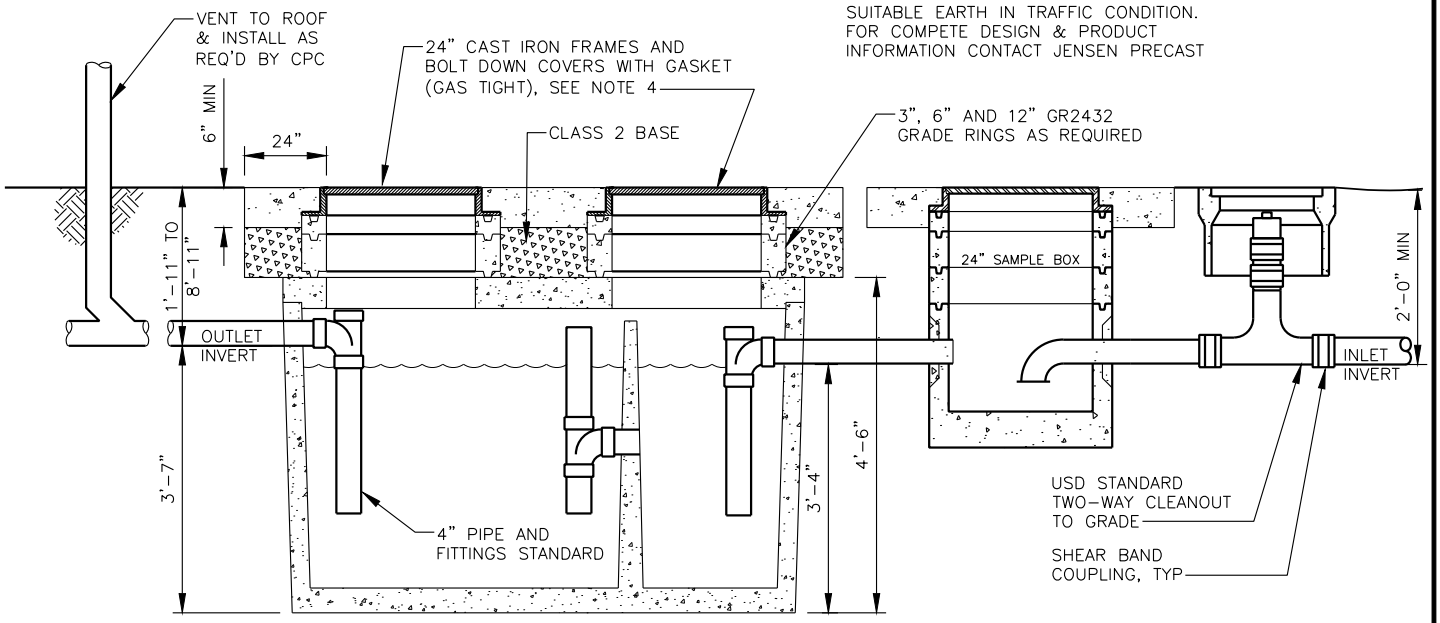

SIDE SECTION VIEW

BOX DESIGN LOAD: H-20 TRAFFIC FROM 1' TO 6' OF SOIL COVER

FOR COMPLETE DESIGN & PRODUCT INFORMATION CONTACT JENSEN PRECAST

MINIMUM SIZE OF 320 GALLONS

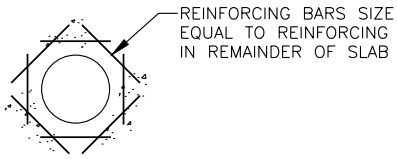

MANHOLE AREA REINFORCING DETAIL

NOT TO SCALE

NOTES:
1. DIMENSION AS SHOWN UNLESS OTHERWISE SPECIFIED BY USD.
2. JENSEN 320 PRECAST BOXES AS MANUFACTURED BY JENSEN PRECAST OR AN APPROVED EQUAL.
3. ALL CONCRETE SHALL HAVE A MINIMUM COMPRESSIVE STRENGTH OF 3000 PSI AT 28 DAYS.
4. CIRCULAR LIDS SHALL BE SOUTH BAY FOUNDRY 1900-BD OR APPROVED EQUAL, WITH RAISED "S" OR "SANITARY SEWER".
5. TANK TO BE PLACED ON TYPE "B" IMPORT.
6. HEIGHT OF TANK ABOVE FITTINGS IS VARIABLE, 6 OR 12 INCH SECTIONS MAY BE ADDED TO REACH THE REQUIRED FINISHED GRADE. MORTAR AND BAND BOTH SIDES IN FIELD.
7. ALL CONCRETE JOINTS SHALL BE CLEANED, WETTED AND MORTARED PRIOR TO SETTING NEXT SECTION. THE JOINTS SHALL BE PACKED, TROWELED AND BANDED SMOOTH ON BOTH SIDES OF THE BOX.

Date 3/15/17 Detail No. 23 Approved By PAUL R. ELDREDGE, RCE 60211	UNION SANITARY DISTRICT	TRASH ENCLOSURE INTERCEPTOR	23

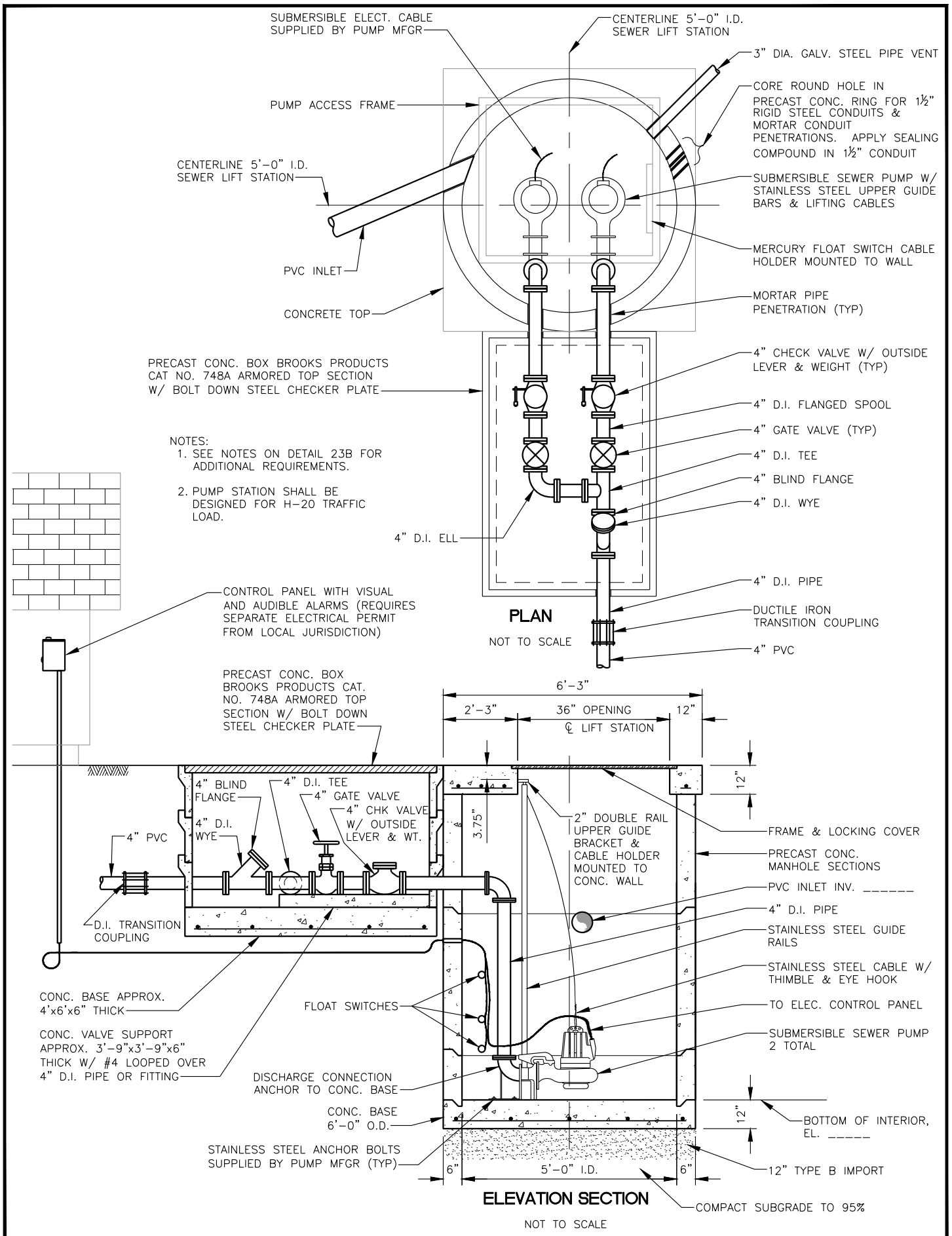

Date 3/15/17 Detail No. 24A Approved By PAUL R. ELDREDGE, RCE 60211	UNION SANITARY DISTRICT	COMMERCIAL/MULTI-FAMILY RESIDENTIAL PUMPING STATION	24A

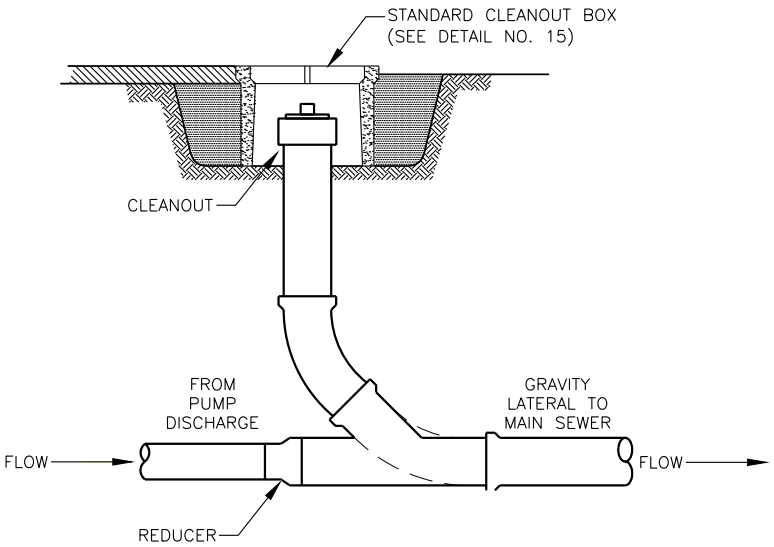

ELEVATION SECTION

NOT TO SCALE

NOTES:

1. THE MINIMUM REQUIREMENTS FOR A COMMERCIAL/MULTI-FAMILY RESIDENTIAL PUMPING SYSTEM CONNECTING TO THE DISTRICT'S SYSTEM ARE SPECIFIED IN THE FOLLOWING PARAGRAPHS.

2. THE DISTRICT ACCEPTS NO RESPONSIBILITY FOR THE DESIGN, OPERATION OR MAINTENANCE OF SUCH PRIVATELY-OWNED AND OPERATED SYSTEMS.

3. ALL EQUIPMENT AND ACCESSORIES SHALL BE STANDARD MANUFACTURED ITEMS AND THOSE COMING IN DIRECT CONTACT WITH SEWAGE SHALL BE SPECIFICALLY MANUFACTURED FOR SEWAGE USE.

4. WHEN INSTALLED OUTSIDE OF A BUILDING, THE MOTOR, CONTROLS AND VALVES SHALL BE READILY ACCESSIBLE FOR MAINTENANCE YET PROTECTED AND SHELTERED BY A WEATHER-PROOF, WELL VENTILATED ENCLOSURE SECURED AGAINST TAMPERING.

PUMPS:

THE PUMPS SHALL BE A CENTRIFUGAL, SUBMERSIBLE, NON-CLOG TYPE. THE IMPELLER SHALL BE CAPABLE OF PASSING A TWO (2) INCH SPHERE. THE MINIMUM PUMP DISCHARGE SHALL BE THREE (3) INCHES IN DIAMETER. THE PUMP CAPACITY AGAINST THE REQUIRED HEAD SHALL BE APPROVED BY THE DISTRICT.

SUBMERSIBLE PUMPS MUST BE U.L. RATED AS EXPLOSION PROOF. PUMP REQUIREMENTS INSOFAR AS SOLIDS HANDLING CAPACITY AND PUMP RATE AND HEAD, MUST CONFORM TO BASIC STANDARDS REQUIRED FOR STANDARD WET PIT INSTALLATIONS.

PUBLIC USAGE INSTALLATIONS (AS DEFINED IN THE UNIFORM PLUMBING CODE) WILL REQUIRE DUAL PUMPS MEETING ABOVE DESIGN STANDARDS AND ARRANGED TO FUNCTION INDEPENDENTLY IN CASE OF OVERLOAD OR MECHANICAL FAILURE.

PUMP SUMP:

THE PUMP SUMP TANK SHALL BE SIXTY (60) INCHES IN DIAMETER AND THE DEPTH SHALL BE AS REQUIRED TO EXTEND SIX (6) INCHES ABOVE GROUND AND THREE (3) FEET BELOW THE INLET PIPE (UNLESS OTHERWISE APPROVED BY THE DISTRICT). THE PUMP SUMP SHALL BE REINFORCED CONCRETE.

ELECTRIC POWER SERVICE:

THE POWER REQUIREMENTS SHALL BE AS RECOMMENDED BY THE PACIFIC GAS AND ELECTRIC COMPANY. THE NAME PLATE HORSEPOWER SHALL BE GREATER THAN THE BRAKE HORSEPOWER NECESSARY TO OPERATE THE PUMP AT THE TOTAL REQUIRED HEAD AND SHALL NOT OVERLOAD IF OPERATING HEAD SHOULD DROP 30%.

ELECTRICAL WORK AND CONTROL:

ALL ELECTRICAL WORK AND CONTROLS SHALL CONFORM TO THE REQUIREMENTS OF THE CITY HAVING JURISDICTION. THE ELECTRICAL CONTROLS SHALL PROVIDE ADEQUATE PROTECTION FOR THE MOTORAND EQUIPMENT.

FLOAT SWITCH ASSEMBLY:

THE LEVEL CONTROL SWITCH SHALL HAVE GAS TIGHT MOUNTINGS WITH A NATIONAL ELECTRICAL MANUFACTURERS ASSOCIATION ONE (1) SWITCH ENCLOSURE.

VENT FOR PUMP SUMP:

WHERE SYSTEM IS LOCATED WITHIN THE DWELLING, A VENT SHALL BE PROVIDED AS REQUIRED BY LOCAL CODES. WHERE SYSTEM IS LOCATED OUTSIDE THE DWELLING, A THREE (3) INCH OR LARGER VENT SHALL BE EXTENDED TO A POINT TEN (10) FEET ABOVE THE PUMP SUMP COVER AND HAVE A RETURN BEND AT TOP.

DISCHARGE LINE:

THE PRESSURE PORTION OF THE DISCHARGE LINE, INCLUDING THE CHECK VALVE, GATE VALVE AND FLEXIBLE COUPLINGS SHALL BE EQUAL IN SIZE TO THE PUMP DISCHARGE. THE PIPE SHALL BE DUCTILE IRON OR APPROVED EQUAL SUITABLE FOR DESIGN PRESSURES. THE CHECK VALVE SHALL BE A STOCKHAM G-927 OR APPROVED EQUAL. THE GATE VALVE SHALL BE A STOCKHAM G-608 OR APPROVED EQUAL. THE FLEXIBLE COUPLING SHALL BE A STYLE 38 DRESSER COUPLING OR APPROVED EQUAL.

THE GRAVITY PORTION OF THE DISCHARGE LINE SHALL BE FOUR (4) INCH MINIMUM DIAMETER PIPE AND SHALL MEET THE DISTRICT REQUIREMENTS FOR BUILDING SEWERS.

SUBMITTAL REQUIRED FOR DISTRICT APPROVAL:

THE OWNER OR CONTRACTOR SHALL SUBMIT TO THE DISTRICT FOR APPROVAL A COMPLETE DESIGN SUBMITTAL, INCLUDING HYDRAULIC CALCULATIONS, LIST OF EQUIPMENT AND ACCESSORIES TO BE INSTALLED AND PUMP CURVES PRIOR TO DISTRICT ISSUANCE OF A BUILDING SEWER PERMIT. SUBMITTAL SHALL BE STAMPED BY A LICENSED CIVIL OR MECHANICAL ENGINEER.

Date 3/15/17 Detail No. 24B Approved By Paul R. Eldredge PAUL R. ELDREDGE, RCE 60211	UNION SANITARY DISTRICT	COMMERCIAL/MULTI-FAMILY RESIDENTIAL PUMPING STATION CONNECTION TO MAIN AND NOTES	24B

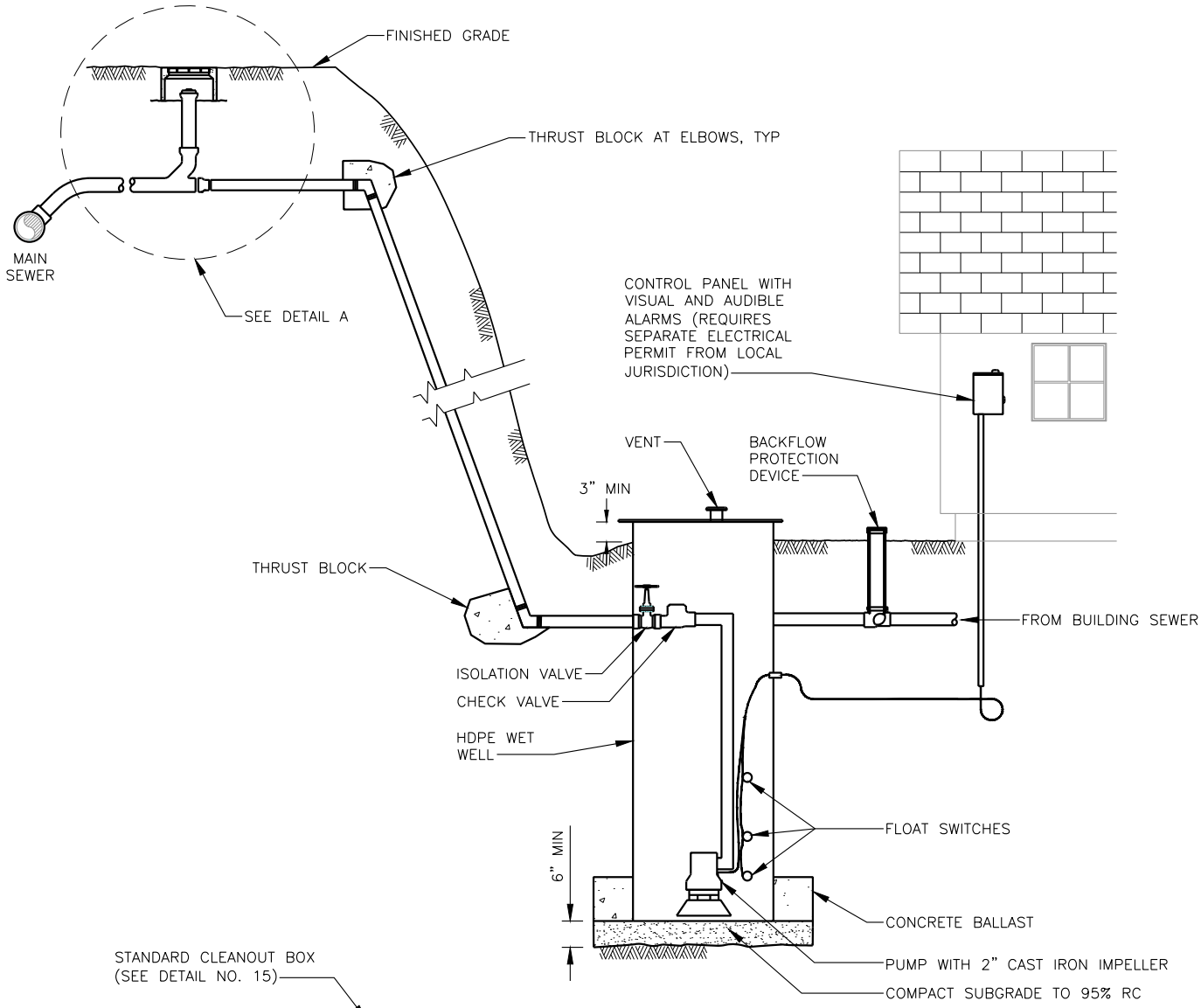

ELEVATION

NOT TO SCALE

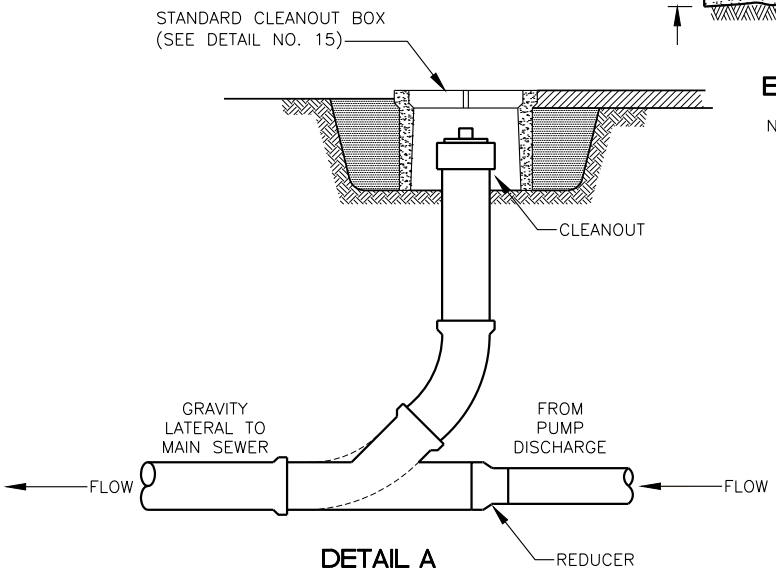

DETAIL A

NOT TO SCALE

NOTES:

1. APPROVED PUMP SYSTEMS ARE:
   a. E-ONE: DH071, DH151, OR DH 152
   b. LIBERTY PRO 370 SERIES OR PRO 380 SERIES
   c. AQUAPRO: E-SERIES, EDP SERIES, SG-SERIES, OR DG-SERIES.
2. CLEANOUT WITH OVERFLOW PROTECTION DEVICE SHALL BE INSTALLED AT BUILDING CONNECTION.
3. DISCHARGE PIPING SHALL NOT BE ABS. THE PIPE SHALL BE DUCTILE IRON, HDPE SDR11, OR PVC SCHEDULE 40 OR 80.
4. WET WELL TANK SHALL BE HDPE.
5. THE OWNER OR CONTRACTOR SHALL SUBMIT TO THE DISTRICT FOR APPROVAL A COMPLETE DESIGN SUBMITTAL, INCLUDING HYDRAULIC CALCULATIONS, LIST OF EQUIPMENT AND ACCESSORIES TO BE INSTALLED AND PUMP CURVES PRIOR TO DISTRICT ISSUANCE OF A BUILDING SEWER PERMIT. SUBMITTAL SHALL BE STAMPED BY A LICENSED CIVIL OR MECHANICAL ENGINEER.
6. SEE STANDARD DETAIL NO. 18 FOR BEDDING AND BACKFILL REQUIREMENTS.

Date 3/15/17 Detail No. 25 Approved By PAUL R. ELDREDGE, RCE 60211	UNION SANITARY DISTRICT	SINGLE-FAMILY RESIDENTIAL PUMPING STATION	25

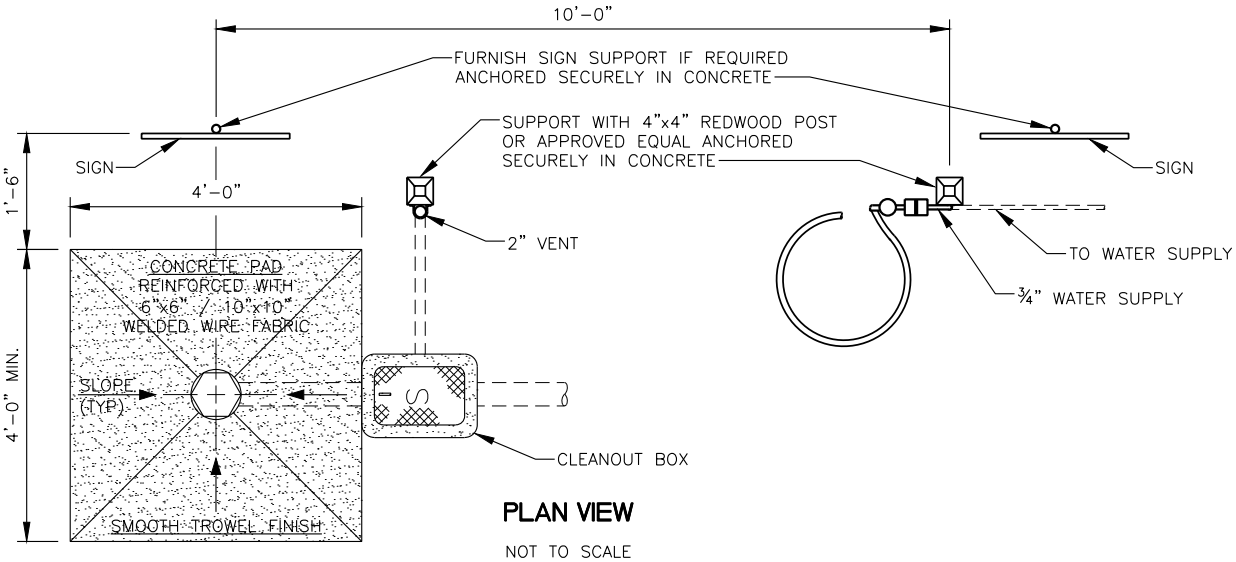

PLAN VIEW

NOT TO SCALE

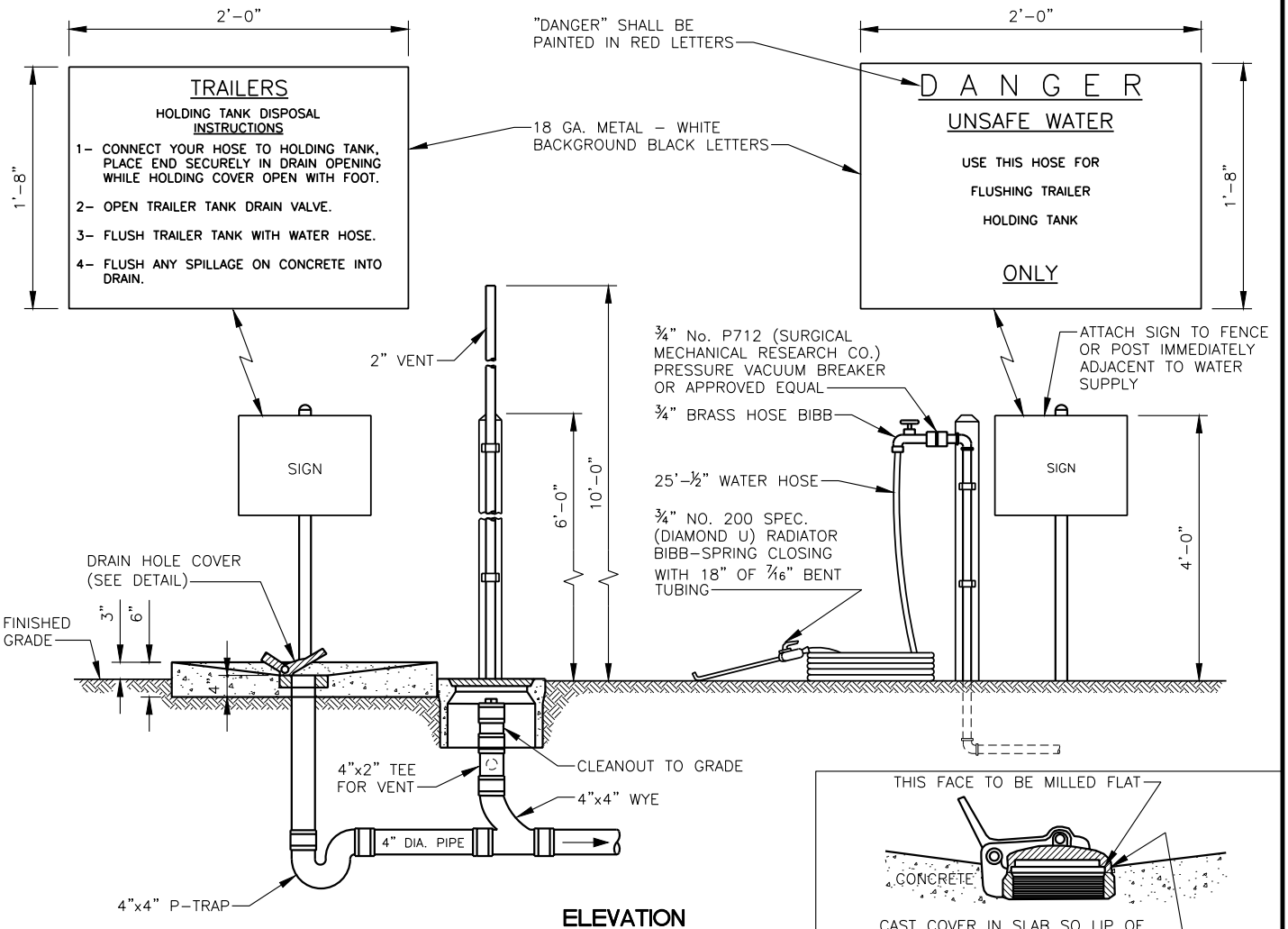

ELEVATION

NOT TO SCALE

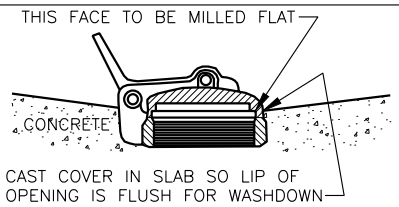

VAREC FIG 42 MODIFIED DRAIN HOLE COVER FOOT OPERATED, STAINLESS STEEL BODY, STAINLESS STEEL COVER, TIGHT AT 3.5 OZ. PRESSURE OR AN APPROVED EQUAL.

DRAIN HOLE COVER DETAIL

NOT TO SCALE

Date 3/15/17 Detail No. 26 Approved By PAUL R. ELDREDGE, RCE 60211	UNION SANITARY DISTRICT	MOBILE HOME/RV/TRAILER HOLDING TANK DISPOSAL FACILITY	26

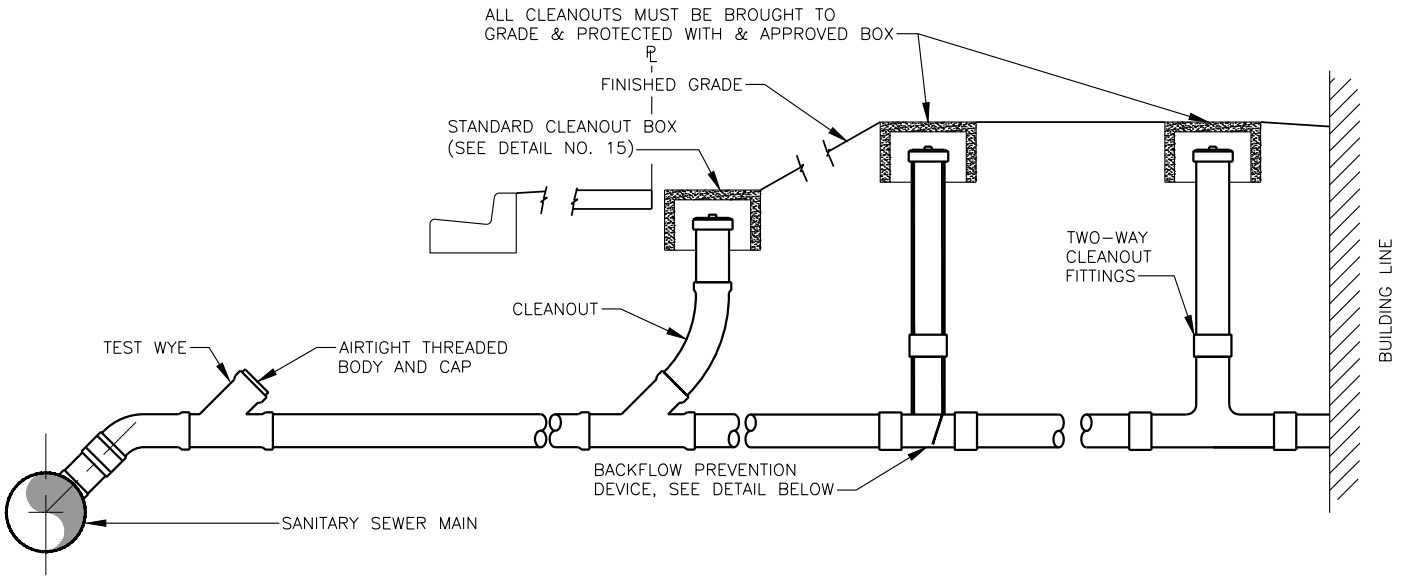

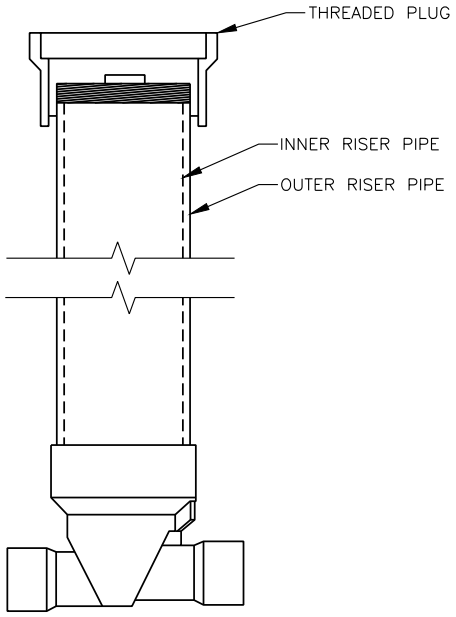

NOTE:
INSTALL THE DEVICE SUCH THAT THE FLAPPER IS LOWER THAN THE ELEVATION OF THE LOWEST PLUMBING FIXTURE ATTACHED TO THE BUILDING DRAINS.

EXTENDABLE BACKFLOW PREVENTION DEVICE

NOTES:

1. INSTALL WHEN REQUIRED BY THE ENGINEER.
2. APPROVED CONCRETE BOXES ARE:
   a) CHRISTY CONCRETE PRODUCTS:
      V9 RECTANGULAR DRAIN BOX WITH V9-71C GRATE LID
   b) CHRISTY CONCRETE PRODUCTS:
      V1 CIRCULAR DRAIN BOX WITH A V1-71C GRATE LID
3. APPROVED MANUFACTURERS:
   a) CLEAN-CHECK® BACKWATER VALVE BY RECTOR SEAL OR APPROVED EQUAL.
4. DO NOT INSTALL STANDARD CLEANOUT IF THE LENGTH BETWEEN THE STANDARD CLEANOUT AND THE 2-WAY CLEANOUT IS 50' OR LESS.

Date 3/15/17 Detail No. 27 Approved By PAUL R. ELDREDGE, RCE 60211	UNION SANITARY DISTRICT	OVERFLOW/BACKFLOW PREVENTION DEVICE	27

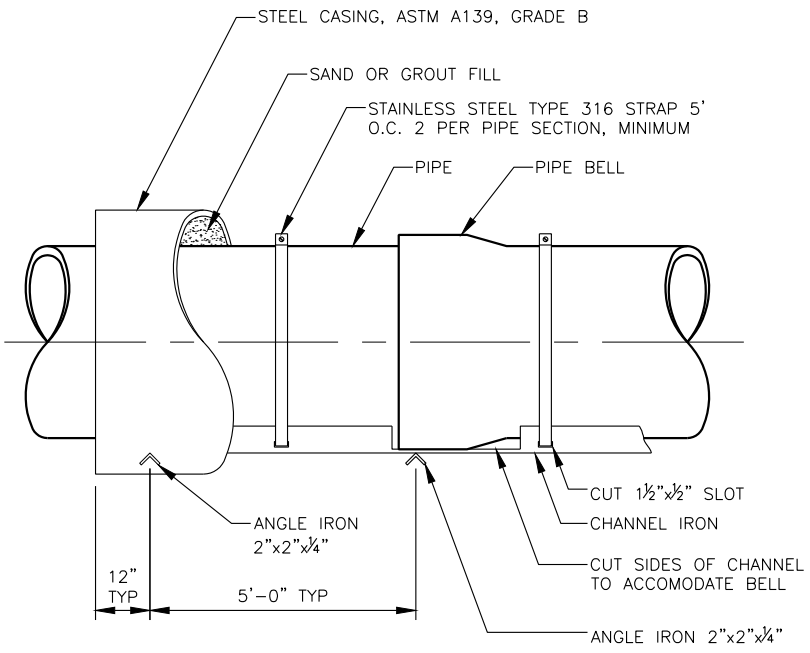

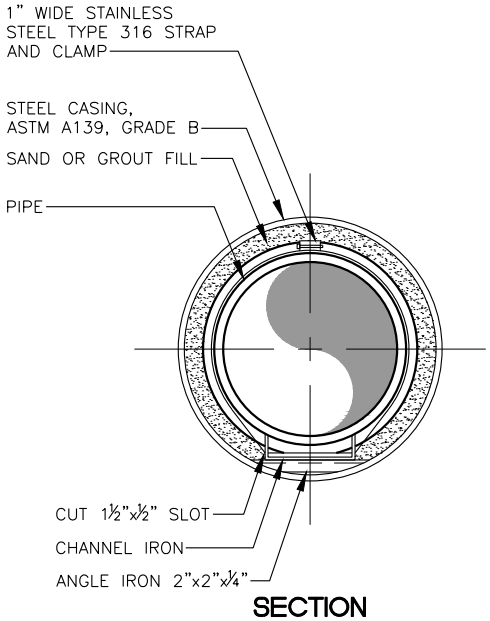

SECTION

NOT TO SCALE

TYPICAL CASING PIPE DETAIL

NOT TO SCALE

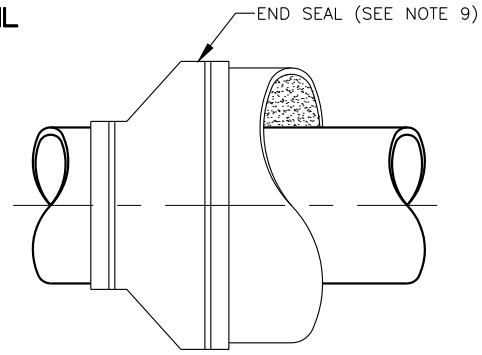

END SEAL

NOT TO SCALE

NOTES:

1. CASING SHALL BE STEEL, ASTM A139, GRADE B (MINIMUM YIELD STRENGTH OF 35,000 PSI). CASING INSIDE DIAMETER SHALL BE 30" OR 12" LARGER THAN OUTSIDE DIAMETER OF CARRIER PIPE BELL, WHICHEVER IS GREATER. MINIMUM CASING THICKNESS SHALL BE AS FOLLOWS:

MINIMUM CASING THICKNESS	CASING DIAMETER
½"	30"
¾"	UP TO 48"

FOR CASING DIAMETERS LARGER THAN 48" OR IF REQUIRED BY THE ENGINEER, CONTRACTOR SHALL SUBMIT CASING THICKNESS CALCULATIONS SIGNED AND STAMPED BY A PROFESSIONAL ENGINEER REGISTERED IN THE STATE OF CALIFORNIA.

2. EACH CASING JOINT SHALL BE WELDED ALL AROUND.

3. CASING SHALL BE INSTALLED BY JACKING AND BORING, UNLESS OTHERWISE APPROVED BY DISTRICT ENGINEER.

4. ANNULAR SPACE BETWEEN INSIDE OF CASING AND OUTSIDE OF CARRIER PIPE SHALL BE COMPLETELY FILLED WITH CLEAN DRY SAND OR GROUT PER SPECS.

5. CARRIER PIPE AND CHANNEL WILL BE SUPPORTED BY ANGLE IRON WELDED TO THE INNER WALL OF CASING. CARRIER PIPE SHALL BE LAID SUCH THAT AN EVEN GRADE IS PROVIDED.

6. CHANNEL SECTIONS SHALL BE WELDED TO FORM CONTINUOUS CHANNEL. MAX ALLOWABLE UNSUPPORTED LENGTH OF CHANNEL IN CASING IS 5'-0". CHANNEL SHALL BE WELDED TO ANGLE IRON AT ENDS OF CASING ONLY.

7. CHANNEL SIDES SHALL BE CUT TO PROVIDE MIN. ⅛" CLEARANCE BETWEEN CHANNEL AND BELL END OF PIPE. PIPE SHALL NOT BE SUPPORTED BY BELL END OF PIPE.

8. PROVIDE ANGLE IRON MAX. 1'-0" FROM ENDS OF CASING.

9. END SEAL SHALL BE ⅛" THICK NEOPRENE RUBBER WITH TYPE 316 STAINLESS STEEL STRAPS.

Date 3/15/17 Detail No. 28 Approved By PAUL R. ELDREDGE, RCE 60211	UNION SANITARY DISTRICT	PIPE CASING	28

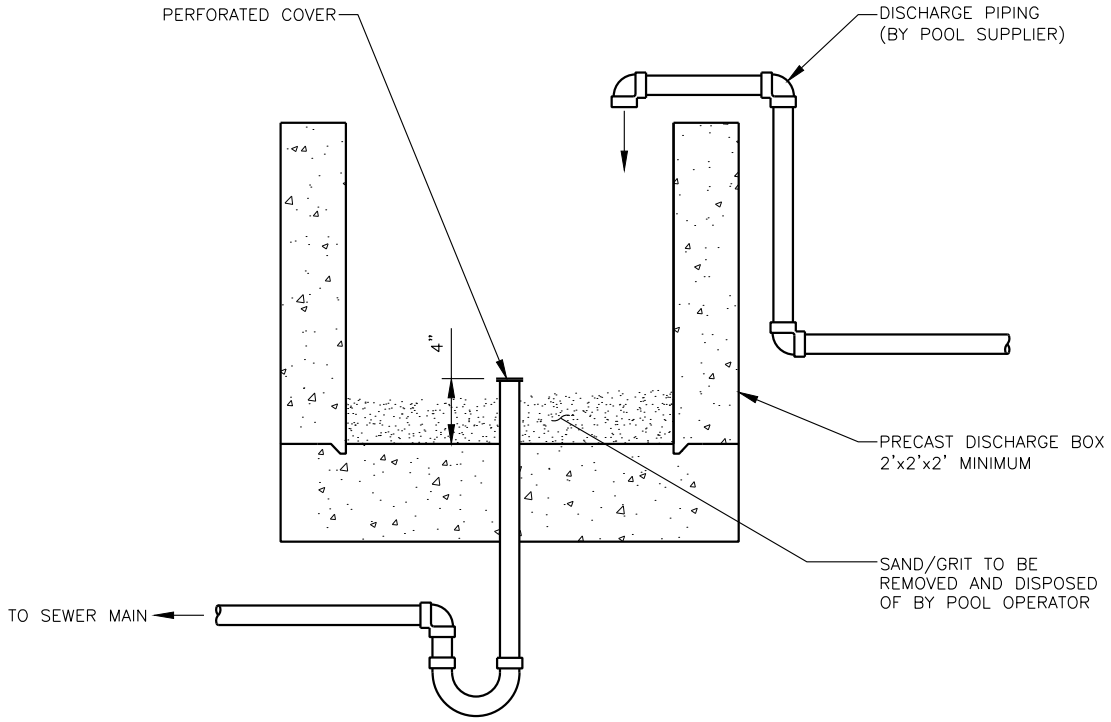

ELEVATION SECTION

NOT TO SCALE

Date 3/15/17 Detail No. 29 Approved By PAUL R. ELDREDGE, RCE 60211	UNION SANITARY DISTRICT	POOL FILTER BACKWASH SUMP	29

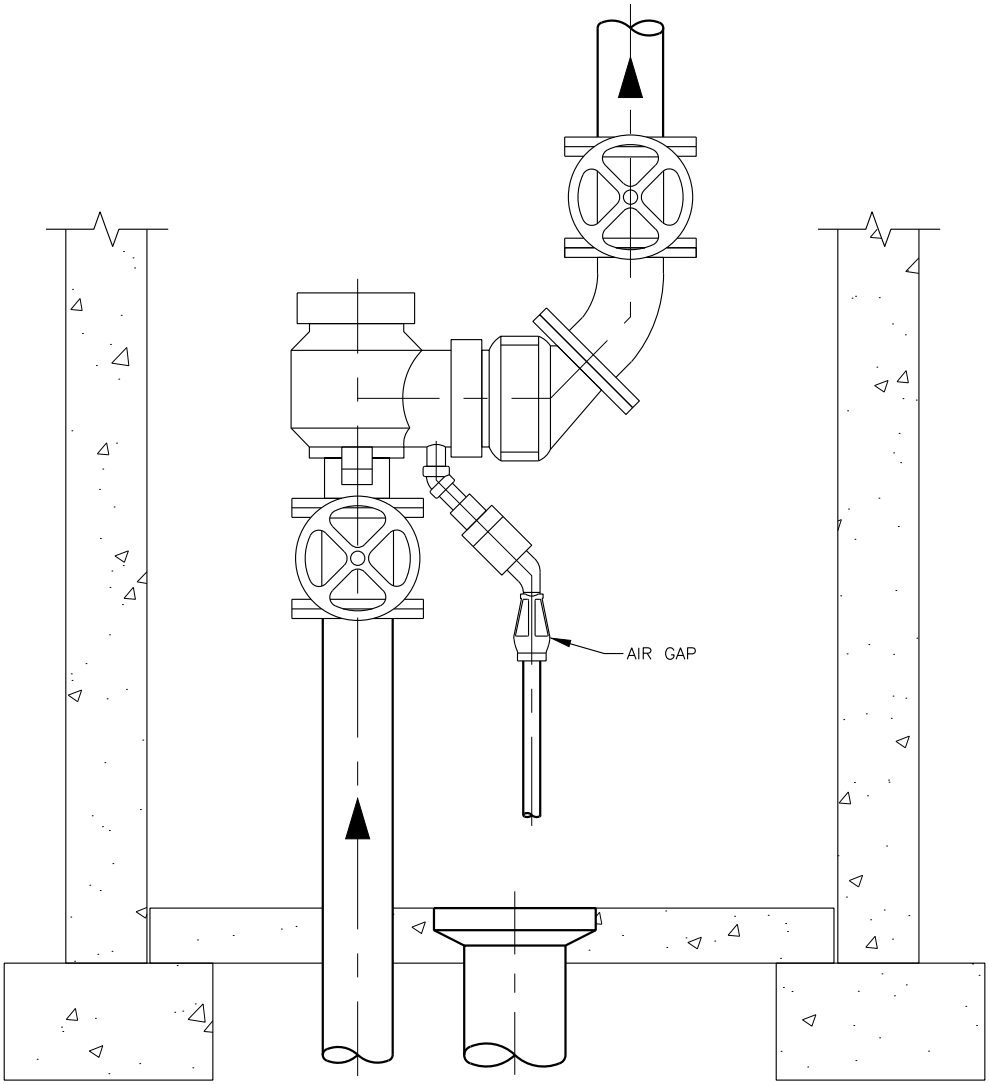

INDOOR INSTALLATION

NOT TO SCALE

NOTES:
1. AIR GAP SHALL BE MODEL AG MANUFACTURED BY WILKINS OR AN APPROVED EQUAL.

Date 3/15/17 Detail No. 30 Approved By PAUL R. ELDREDGE, RCE 60211	UNION SANITARY DISTRICT	AIR GAP FOR FIRE SPRINKLER TEST	30

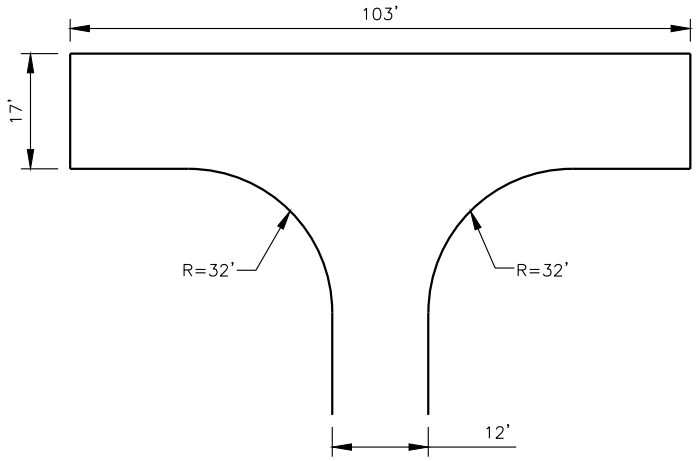

T-TURN

NOT TO SCALE

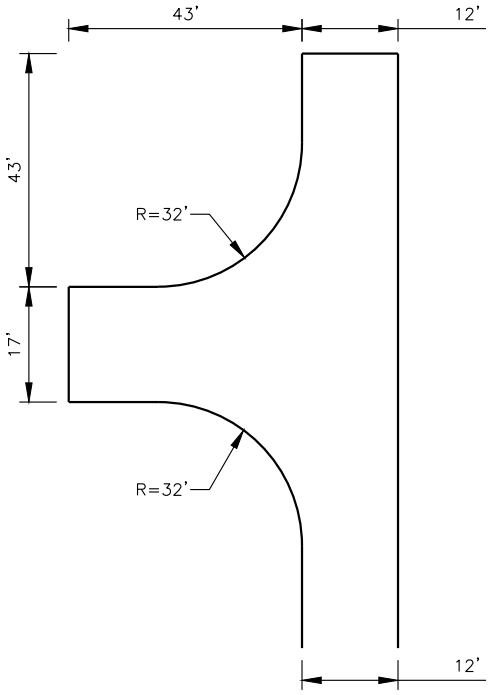

HAMMER-HEAD

NOT TO SCALE

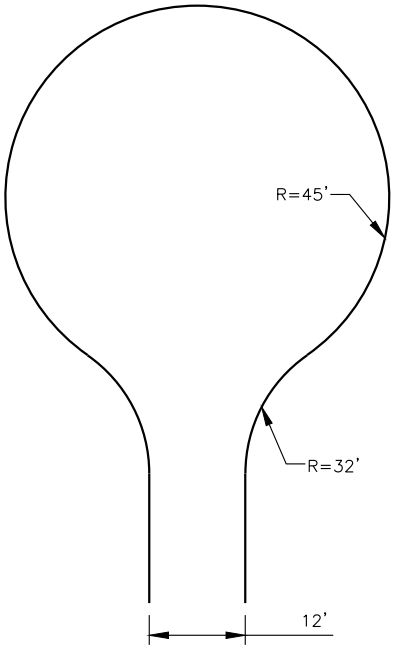

CIRCLE

NOT TO SCALE

Date 3/15/17 Detail No. 31 Approved By PAUL R. ELDREDGE, RCE 60211	UNION SANITARY DISTRICT	STREET/ACCESS ROAD REQUIREMENTS	31

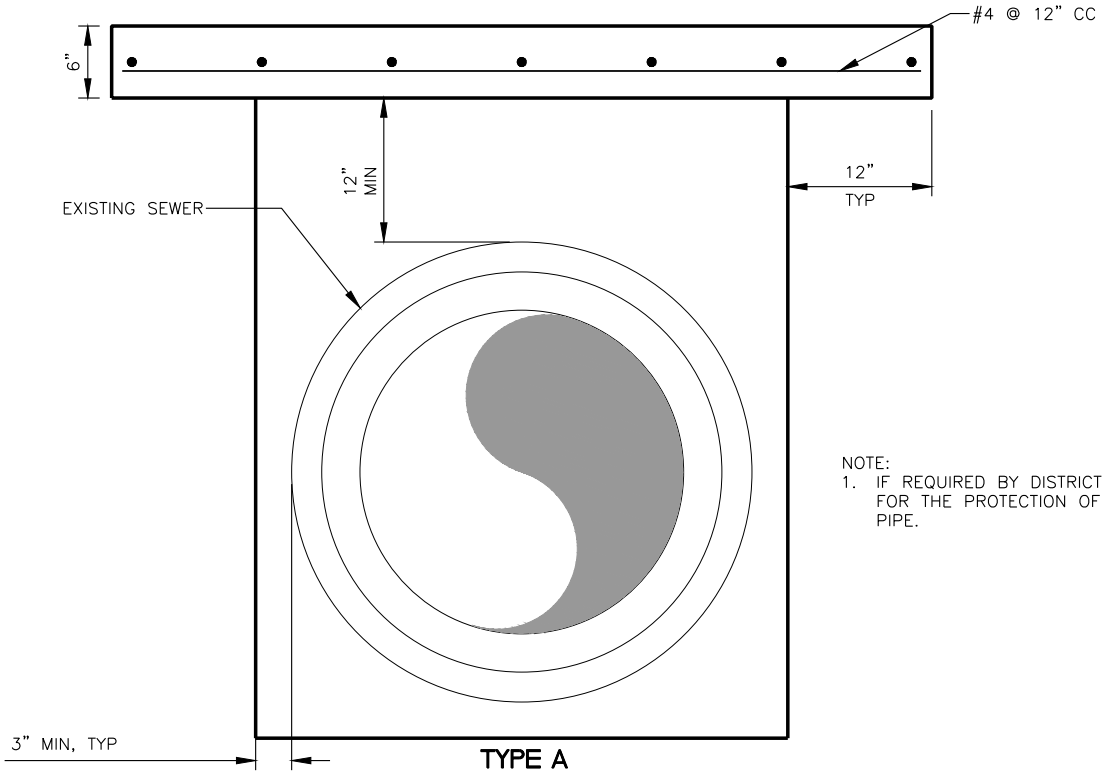

NOTE:
1. IF REQUIRED BY DISTRICT ENGINEER FOR THE PROTECTION OF EXISTING PIPE.

TYPE A

NOT TO SCALE

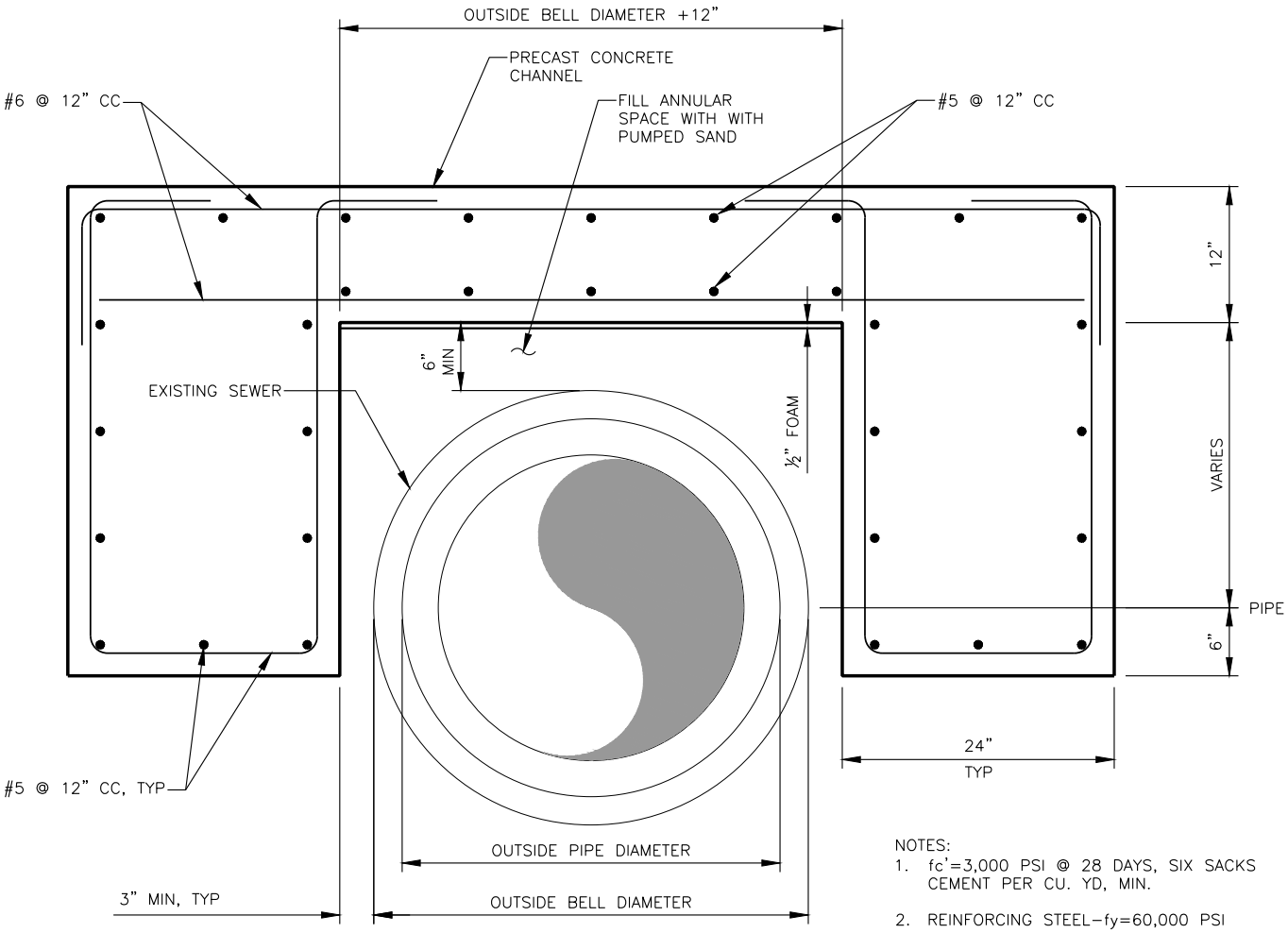

NOTES:
1. fc'=3,000 PSI @ 28 DAYS, SIX SACKS CEMENT PER CU. YD, MIN.
2. REINFORCING STEEL–fy=60,000 PSI

TYPE B

NOT TO SCALE

Date 3/15/17 Detail No. 32 Approved By PAUL R. ELDREDGE, RCE 60211	UNION SANITARY DISTRICT	PIPE CONCRETE CAP	32

FOR USE IN THE ADJUSTMENT OF EXISTING MANHOLES WITH THE "TEICHERT" OR SIMILAR JOINTS.

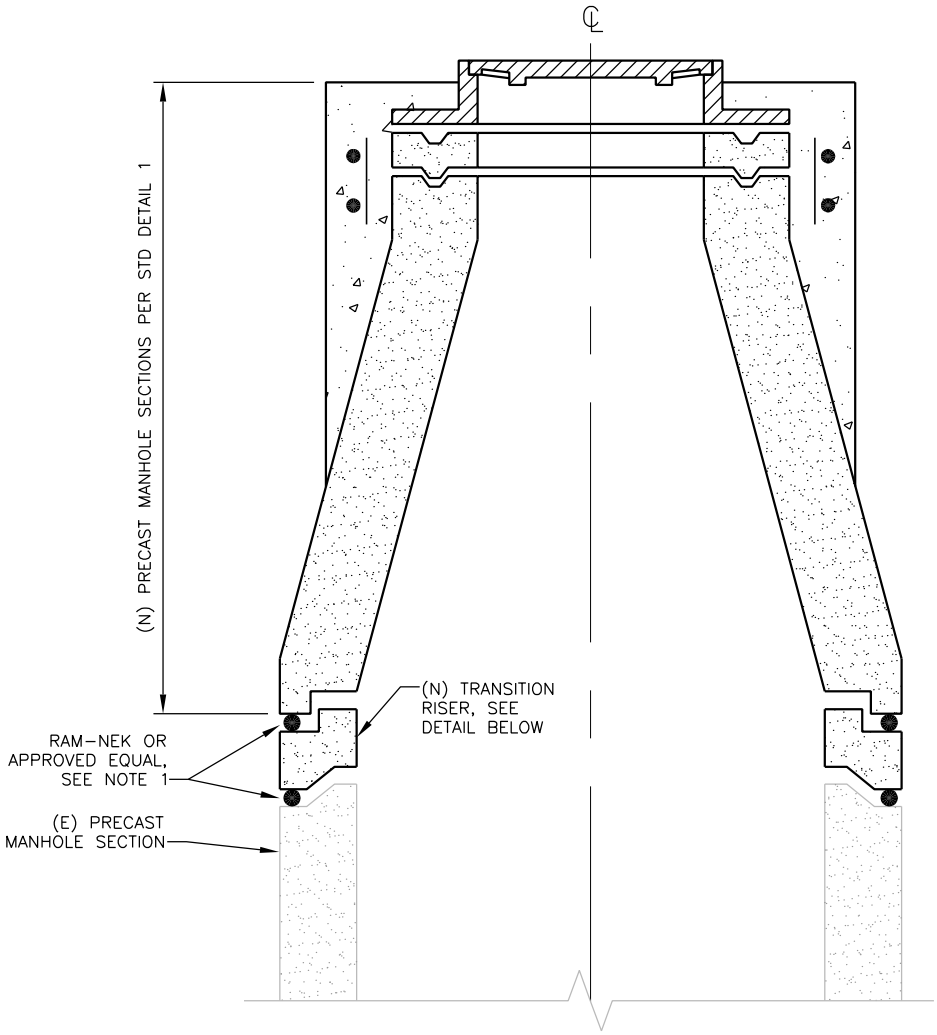

ELEVATION SECTION

NOT TO SCALE

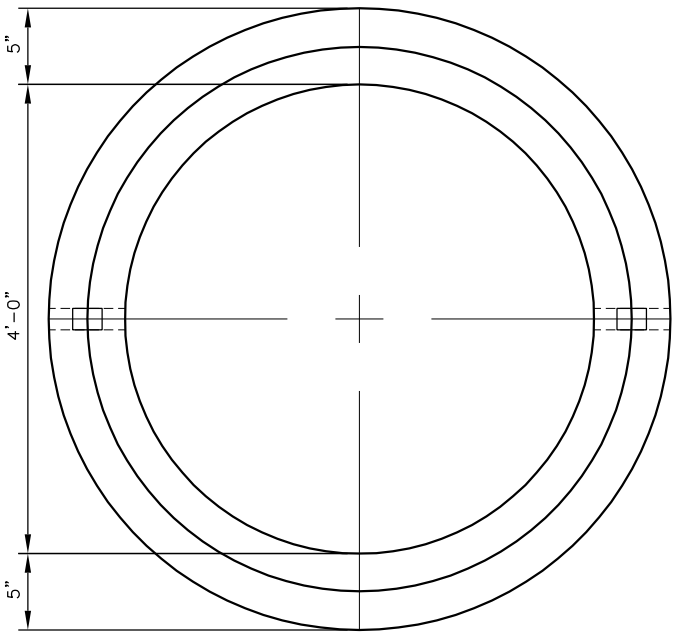

PLAN VIEW

NOT TO SCALE

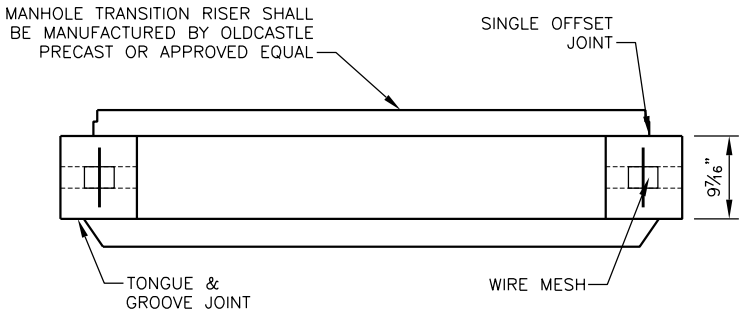

TRANSITION RISER SECTION

NOT TO SCALE

NOTES:

1. INSTALL "RAM-NEK" OR APPROVED EQUAL BETWEEN EACH JOINT OF THE CONE AND BARREL SECTIONS TO MAKE A FLEXIBLE WATER-TIGHT JOINT. AFTER JOINT IS MADE, TRIM JOINT SMOOTH ON THE INSIDE OF MANHOLE.
2. FOR TRUNK MANHOLES, INSIDE DIAMETER IS 5'-0".

Date 3/15/17 Detail No. 33 Approved By PAUL R. ELDREDGE, RCE 60211	UNION SANITARY DISTRICT	MANHOLE TRANSITION RISER	33

INDEX

---------- A ----------

Abandonments 11.10
Building Sewer ..... 11.10(b)
Main Sewer..... 11.10(a)
Manhole..... 11.10(c)
Septic Tank..... 11.10(d)

Abbreviations.....2.02
Pipe Types.....2.03

Acceptance
of construction 20
of building sewer 20.02
of main sewers 20.01

Access
to fire hydrants, water gates, meters and private driveways ..... 8.02(h)
to job site ..... 11.01(c)

Adjustments
to existing main sewers or appurtenances 11.09, 18.02

Air Testing
Building sewers 12.02
Main sewers 12.01

Alignment
Allowable deviation..... 7.01(b)
Of building sewers.....23.03
Of main sewers 22.04

Alterations
Engineer's right 11.02

Approval, of construction
Building sewers 20.02
Main sewers 20.01

---------- B ----------

Blasting ..... 8.02(f)

Bracing
For trenches ..... 8.02(e)

Building Sewer
Abandonment of, ... 11.10(b)
Alignment of, ...23.03
Approval and acceptance of, ...20.02
Cleanout to grade.....7.05, 23.19(b)(c)
Clearance between utilities 23.12

Connection to existing building sewer....23.10
Connection to building drain (kick out)....23.11
Connection to existing main sewer....23.08
Crossing utilities....22.14
Curb marking....11.06, 23.07
Easement requirements....16.06(d)
Grade....23.05
Grade stakes....23.06
Location parallel to building footing....23.13
Minimum pipe cover....23.16
Number required....18.06
Plans....17.09
Pipe materials....23.02
Private manhole....23.19(a)
Repair of,....11.08(c), 18.03
Relocation of,....18.03
Structure type....23.19
Test wye....7.07, 23.19(d)
Testing of,....12.02
Two way cleanout to grade....7.06, 23.19(c)
Use of existing,....11.05

---------- C ----------

Casing
Sewer through,....7.08

Cleaning
Discharge of cleaning water....14.02
Sewer pipe....14.01

Cleanup
Site....15.01

Cleanout
To grade....23.19(b)
Two way to grade....23.19(c)

Clearance
Crossing other utilities (private sewer)....23.12
Horizontal between other utilities (main sewer)....22.11
Horizontal between other utilities (private sewer)....23.18

Commencement
New sewer pipe line....7.01(h)

Compaction
Trench....9.05(c)

Connection
To building drain (plumbing kick-out)....23.11
To existing building sewer....18.03, 23.10
To existing main sewer or appurtenances....18.02, 22.18, 23.08

Construction Permit Requirements
Annexation policy ..... 16.01, 16.05(a)
Bond 16.04
Developer deposit ..... 16.04(d)
Contractor's license 16.03
Fees and charges 16.05
Plans for main sewers 16.06
Plans for building sewers 16.07

Couplings
Pipe 5.03

Cover
Minimum pipe 22.09

Cross-connection
Main sewers 22.05

Curb Marking 23.07

Cut sheets 19.02

---------- D ----------

Damage to District Facilities
Repair costs 18.03

Defective
Work or materials 11.03

Definitions and Terms 2.01

Deflectometer
Test ..... 12.01(h)

Design Depth
Main sewers 22.08

Details
Construction (required) 21.02

Dewatering
Sewer subgrade ..... 8.02(g)

---------- E ----------

Easement Requirements
Building sewers ..... 16.07(f)
Main sewers ..... 16.06(d)
Paving requirements 22.25
Width requirements 22.24

Embedment
Requirement for, ... 5.05

Specifications for, ... 9.04

Existing sewer
Verification of location and elevation ..... 7.01(g)

Excavation
Definition 8.01

---------- F ----------

Fees
Payment before approval 18.03

---------- G ----------

Grade
Allowable deviation of, ... 7.01(b)
Building sewers 23.05
Main sewers 22.06

Grade Stakes
Building sewers 23.06
Main sewers 22.07

Grade Line
Laser ..... 7.01(c)
String line ..... 7.01(d)

Grout 6.02

Guarantee of Work 3.02

---------- I ----------

Import Material
Type “A” ..... 9.04(a)(1)
Type “B” ..... 9.04(a)(2)

Inspection
Access to work site ..... 11.01(c)
Conformance to specifications ..... 11.01(a)
Notification of construction work 19.03
Television 13

---------- J ----------

Joint Deflection
Limitation ..... 7.01(f)

---------- L ----------

Lasers ..... 7.01(c),7.01(d)

---------- M ----------

Mandrel
Test ..... 12.01(h)

Manhole
Abandonment ..... 11.10(c)
Base block, poured concrete ..... 7.03(a)
Base block, precast concrete ..... 7.03(b)
Bolt-down cover 22.23
Castings ..... 7.03(d)
Collar ..... 7.03(f)
Connection of building sewer 22.18
Connection of sewer stubs 22.20
Deflection, maximum of sewer pipes 22.17
Drop ..... 7.03(c), 22.22
Elevations of sewer pipes 22.16
Liners ..... 7.03(g)
Locations of, ... 22.15
Marking 11.07
Rim elevation 22.19
Private ..... 23.19(a)
Protection 11.04
Sewer pipes through ..... 7.01(i)
Shaft, precast concrete ..... 7.03(b)
Steps ..... 7.03(e)

Materials of Construction
Concrete 6.01
Cleanout to Grade 7.05
Embedment 9.04
Existing building sewers 11.05
Manhole 7.03
Mortar 6.02
Pipe 5.02, 22.01, 23.02
Riser 7.04
Rock ballast 9.02
Steel casing 7.08

Mortar 6.02

---------- O ----------

Overflow Devices
Building sewers 23.20

---------- P ----------

Paving Replacement
Definition 10.01

Easements 10.02, 10.03
Private property 10.03
Public rights-of-way 10.02
Utility easements 10.02

Permits
City building 16.12
Sewer construction 19.01
Waste discharge ..... 16.05(j)

Pipe
Acrylonitrile-butadiene-styrene (ABS) ..... 5.02(b)(1)
Ductile iron (DIP) ..... 5.02(a)(2)
Embedment 9.04
Field cutting ..... 7.01(m)
Flexible ..... 5.02(b)
Foundation
Rock ballast 9.02
Ground to be filled for cover ..... 7.01(k)
Handling of ..... 7.01(l)
Material (building sewer) 23.02
Material (main sewer) 22.01
Material change (main sewer) 22.02
Minimum cover (building sewer) 23.16
Minimum cover (main sewer) 22.09
Poly vinyl chloride (PVC) ..... 5.02(b)(2)
Splice 7.02
Vitrified Clay (VCP) ..... 5.02(a)(1)

Plans
Building sewer 16.09
Main sewer 16.08

Plugs
Sewer pipe ..... 7.01(e)

Preparation
Site 4.01

---------- Q ----------

Quitclaim
Requirements ..... 16.06(e)

---------- R ----------

Relocation
Existing building sewer ..... 11.08(c), 18.03
Existing main sewer ..... 11.08(b), 18.01
New building sewer ..... 11.08(a)
Other agency facilities ..... 11.08(d)

Restoration
Site 15.01

Riser
Casting ..... 7.04(b)
Shaft ..... 7.04(a)

Rock Ballast
Pipe foundation 9.02
---------- S ----------

Saddle
Pipe 5.04

Septic Tanks
Abandonment ..... 11.10(d)

Sewer Line
Commencement of new ..... 7.01(h)

Shoring ..... 8.02(e)

Size and Slope (pipe)
Building sewer 23.01
Main sewer 22.03

Specifications and Details 20

Splice 7.02

Staking
Construction ..... 7.01(a), 19.02

Storm Drain Crossings
Building sewer 23.14
Main sewer 22.12

Structure
Type and location 23.19

Surveying Instruments ..... 7.01(c), 7.01(d)

---------- T ----------

Television Inspection 13

Testing
Building sewer 12.02
Main sewer 12.01
Pressure sewer 12.03

Test Wye
Building sewer ..... 23.19(d)

Trench
Backfilling 9
Definition 9.01

Material
Above pipe embedment 9.04
Compaction ..... 9.05(c)
Intersections 22.10, 23.17

Trenching
Access to private drives ..... 8.02(h)
Blasting ..... 8.02(f)
Bracing and shoring ..... 8.02(e)
Compaction ..... 8.02(d)
Contractor's responsibility ..... 8.02(j)
Mud or soft or spongy material ..... 8.02(a)
Open trench permitted ..... 8.02(i)
Open trenching required 8.02
Over-excavated areas ..... 8.02(c)
Rock ..... 8.02(b)
Sewer subgrade dewatering ..... 8.02(g)

---------- V ----------

Verification
Of existing sewer or structure ..... 7.01(g)

---------- W ----------

Work
Scope of 3.01

Work Order
Signed by responsible party 18.03
Emergency repair 18.03

UNION
SANITARY
DISTRICT

Fats, Oils and Grease Control Ordinance

Ordinance No. 38

May 2004

This is an Official Image of a Certified USD Document

Table of Contents

Section 1—General Provisions
1.01 Scope and Purpose 1
1.02 Definitions 1

Section 2—Administration
2.01 General Requirements 2
2.02 Use and Maintenance 3
2.03 Inspection and Sampling 4
2.04 Existing Facilities 4

Section 3—Regulations

3.01 Prohibitions 4

Section 4—Enforcement
4.01 Violations, Enforcement, and Penalties 5

Section 5—Exceptions
5.01 Variance Requests 6

Section 6—Severability
6.01 Severability 7

Section 7—Effective Date
7.01 Effective Date 7

This is an Official Image of a Certified USD Document

Section 1

GENERAL PROVISIONS

1.01 Scope and Purpose

The purpose of this Ordinance is to aid in controlling the introduction and accumulation of fats, oils, and grease into the Union Sanitary District sewer collection and treatment system, thereby reducing the potential for sanitary sewer overflows. The guidelines and requirements of this Ordinance seek to ensure that industrial and commercial establishments do not exceed established discharge limits for animal- and vegetable-based fats, oils and grease or mineral/petroleum-based oils and grease. Users regulated under this Ordinance are also subject to Union Sanitary District Pretreatment Ordinance No. 36 and Technically Based Local Limits.

1.02 Definitions

1. District: Union Sanitary District, Alameda County, California.

2. District Engineer: The General Manager of the District, or his/her designees, including, but not limited to, duly authorized District personnel.

3. User: Any person, business, industry, firm, company, association, society, corporation, or group, including those located outside the jurisdictional limits of Union Sanitary District that discharges wastewater into the sanitary sewer collection system owned, operated and maintained by Union Sanitary District. Users include persons who contribute such wastewater from mobile sources, such as those who discharge hauled wastewater.

4. Fats, Oils, and Grease: Organic polar compounds derived from animal and/or plant sources that contain multiple carbon chain triglyceride molecules. These substances are detectable and measurable using analytical test procedures established in 40 CFR 136, as may be amended from time to time. All such compounds are sometimes referred to herein as "grease." Throughout this Ordinance document, references to oils and grease are to include mineral/petroleum-based oils and grease.

5. Grease Interceptor, Grease Trap or Grease Removal Device (GRD): Any device, unit, or installation for separating and retaining waterborne fats, oils and greases or grease complexes as well as settleable solids prior to the discharge of wastewaters to the sanitary sewer collection and treatment system. All such installations, whether sub-surface or above ground, regardless of size, including sand and oil/water separators as well as two-compartment sumps, are referred to herein as "Grease Interceptors," "Interceptors," or "Grease Removal Devices."

This is an Official Image Certified USD Document

6. Food Service Establishments: Those establishments primarily engaged in activities of food preparation, food service, or the making available for consumption foodstuffs and that use one or more of the following preparation methods: cooking by frying (all methods), baking (all methods), grilling, sautéing, rotisserie cooking, broiling (all methods), boiling, blanching, roasting, toasting, or poaching. Also included are infrared heating, searing, barbecuing, and any other food preparation activity that produces a heated food product, whether served on or in washable and reusable plates or containers or those of a disposable type.

For the purpose of this document, Food Service Establishments include those establishments or facilities where foodstuffs are served or prepared for consumption or sale. This includes but is not limited to cold dairy and frozen foodstuffs preparation and serving establishments that prepare or serve drinkable or edible products.

Section 2

ADMINISTRATION

2.01 General Requirements

Grease interceptors are required and installed at the User's expense when such User operates a Food Service Establishment. Grease interceptors and or similar units will also be required and installed at the User's expense at commercial car washes, in commercial trash enclosures, or at other commercial and industrial establishments when they are deemed necessary by the District Engineer for the proper handling of liquid wastes.

The type, design, location and size of a grease interceptor installed by any User shall be determined and approved by the District Engineer. The District Engineer shall also determine which drainage fixtures are to be connected to the interceptor.

No User discharging wastewater to the District's sewer system through a grease removal unit or grease interceptor shall allow wastewater oil and grease concentrations to exceed 300 milligrams per liter of animal- and vegetable-based oils and grease or 100 milligrams per liter of mineral/petroleum-based oils and grease.

All grease interceptors shall be readily and easily accessible for maintenance and cleaning purposes in addition to ensuring accessibility for inspection by District personnel. All such grease interceptors shall be serviced and have accumulated waste content removed as required and stipulated in this Ordinance document.

This is an Official Notice of Certified USD Document

All Users are required to maintain and update interceptor maintenance records, including waste hauling manifests. These shall be retained by the User for a period of not less than three (3) years and made available for review or duplication upon request by the District.

2.02 Use and Maintenance

Users who are required to install and maintain a grease interceptor, grease trap or any other unit designed to separate and capture settleables or fats, oils or grease of any kind, shall understand, adhere to, and accept the following:

1. By way of any grease interceptor, or similar device, provide sufficient retention time of wastewaters so as to facilitate the separation of oils and grease to the extent that oil and grease concentrations in wastewaters discharged to the sewerage system owned, operated and maintained by Union Sanitary District, do not exceed established discharge limits set by Union Sanitary District as defined in Section 2.01 of this Ordinance document. Such limits, as set by Union Sanitary District, may be more stringent than Federal or State limits.

2. At the User's expense, routine maintenance shall be performed on all facility grease interceptors. All accumulated grease and solids materials shall be removed by a certified waste hauler licensed by the State of California. Such removal of accumulated waste shall be performed on an as-needed basis, but not less than once every ninety (90) calendar days, unless otherwise permitted to do so through a granted variance request issued by the District. "As needed" shall mean as necessary to ensure continued compliance with Union Sanitary District's discharge limits for oil and grease. If it is determined by the District that mainline flow restriction, e.g., a grease blockage or an obstruction, has resulted from the inadequate cleaning or maintenance of a User's grease interceptor, or if in the opinion of the District a need for increased interceptor maintenance frequency exists, the District, at its discretion, may require of a User a minimum routine cleaning frequency of less than ninety (90) days.

3. The District Engineer reserves the right to make determinations of grease interceptor size, adequacy, location and need, based on review of relevant information, including, but not limited to grease interceptor performance, waste stream characteristics, facility location, maintenance needs, and or inspection needs. The aforementioned determinations may or may not conform to Union Sanitary District's general design specifications, construction standards or sizing criteria for grease interceptors or similar devices.

4. The District reserves the right to require repairs to, or replacement of, interceptors and other required grease removal units at the User's expense.

2.03 Inspection and Sampling

District personnel may inspect the facilities of any User required to have a grease interceptor or similar device, to determine whether the requirements set fourth in this Ordinance document are being met. Owners, managers, employees, or any other occupants or operators of facilities where wastewater is generated and discharged to the District's sewerage system through an Interceptor, shall allow District personnel ready access to all areas of the premises, at all reasonable times or during normal hours of operation for the purpose of inspection, sampling, maintenance records review, or the performance of any other job-related duty. The District shall have the right to set up on any User's property devices necessary for conducting wastewater sampling inspection, compliance monitoring and/or metering operations.

2.04 Existing Facilities

If in the opinion of the District Engineer an existing User requires the installation of a grease interceptor or a grease removal device (GRD) for the proper handling of grease-laden wastewaters, the District will provide the User written notification of the requirement which will include a compliance timeline. Failure on the part of a User to install a required interceptor or GRD within the specified time will result in the initiation of enforcement action against the User and may result in the issuance of fines or the termination of service to the sewer system owned by Union Sanitary District.

NOTE: Users required to install outside underground Interceptors will need to obtain a permit from Union Sanitary District. Users required to install indoor grease traps or GRDs may need to obtain approval from the City having jurisdiction over the area in which the User operates. Users are responsible for obtaining all necessary permits before installing a required interceptor or GRD.

This is an Official Internet Copy of Select USD Documents

Section 3

REGULATIONS

3.01 Prohibitions

1. The dumping or pouring of oil or grease by any User, into any sewer drain connected or otherwise not connected to a grease interceptor or grease removal device is strictly prohibited at any time. This includes but is not limited to oil and grease used in or generated by residential cooking activities. Any User found disposing of oil or grease in this manner may

be held liable for costs associated with any related remedial activities deemed necessary by the District.

2. Non-grease-laden sources of wastewater are NOT allowed to be connected to sewer lines intended for grease interceptor service. This includes but is not limited to plumbing for hand wash sinks, toilets, and urinals. The connection of rainwater and condensate conveyance pipes or gutters to interceptors is also prohibited.

3. No dishwashers or garbage/food grinders are to be connected to drainage pipes conveying wastewater to an interceptor or any other grease removal device unless such connections are required by the District. In the event a User is required by the District to make such a connection, the District will issue the User written notification of the requirement which the User shall retain as evidence of District approval.

4. No User shall alter, modify, or change from original design specifications a required interceptor or any other GRD, unless the manufacturer of the interceptor recommends in writing alterations to improve product efficiency. Plans showing any manufacturer proposed alterations and current design specifications shall be submitted to the District for review. All such recommendations for modifications are subject to approval by Union Sanitary District. Any approved alterations/modifications will be performed at the User's expense. The District is not to be held liable for a non-compliant condition resulting from modifications made to an interceptor.

5. No User shall introduce any additives, including but not limited to enzymes or surfactants acting as grease emulsifiers or degradation agents, into any grease interceptor or GRD, unless prior written approval is obtained from Union Sanitary District. Any User, if having been granted approval by the District to use any of the methods described above for the abatement of grease, shall continue to maintain the interceptor in such a manner that conformance to the grease wastewater discharge limit, (defined in Section 2.01) as measured from the interceptor outlet or sample box, is consistently achieved.

Section 4

ENFORCEMENT

4.01 Violations, Enforcement, and Penalties

1. In the event that a User's grease interceptor or other grease removal device fails a visual or effluent sample analysis inspection, the User shall be given written notice of the non-compliant condition and take immediate

steps to bring the facility Interceptor into compliance. The User is responsible for all associated costs.

2. Failure on the part of any User to maintain continued compliance with any of the requirements set forth in this Ordinance may result in the initiation of enforcement action. Such enforcement action may include, but is not limited to, the issuance of a Warning Letter, Notice of Violation (NOV), Administrative Fine or Abatement Order, as outlined in Sections 6 and 7 of District Ordinance 36. User will also be responsible for cost of enforcement action clarified under Ordinance 36. Failure to respond to corrective measures outlined in any enforcement notice may result in the User's termination of service to the sewer system owned, operated and maintained by Union Sanitary District.

3. If it is determined by the District that a User, due to a past or present non-compliant condition, necessitates maintenance or repairs to the Union Sanitary District sewer system outside of normal scheduled maintenance or repair activities, the User may be liable for all associated maintenance and/or repair costs, including but not limited to vehicle, equipment, and labor costs. A User may also be responsible for all clean-up costs associated with any sewer overflows and spills resulting from the inadequate cleaning, maintenance, or performance of the User's interceptor.

Section 5

EXCEPTIONS

5.01 Variance Requests

1. If because of documented space constraints a User requests an alternative to a District required out-of-building underground grease interceptor, the request for an alternate device and location shall be submitted in writing to the District Engineer. Such variance requests must include detailed plans showing the location of the sanitary sewer main and service lateral in relation to available exterior space outside the building as well as existing plumbing plans at or in a site that uses common plumbing for all services at the site.

2. Variance requests to extend the interceptor minimum cleaning frequency from ninety (90) calendar days to a period of greater duration must be submitted to the District in writing. The User shall clearly state in the variance request the reasons for exemption as well as the User's proposed cleaning schedule. All variance requests must be dated and signed by the User or his/her designee.

This is an Official Image of a Certified Document

The District reserves the right to grant or deny variance requests or revoke any granted variances at its discretion or at any time the requirements set forth in this Ordinance document are not being met by a User.

Section 6

SEVERABILITY

6.01 Severability

If any term of this Ordinance is held by a court of competent jurisdiction to be void or unenforceable, the remainder of this Ordinance remains in full force and effect, as if the unenforceable provision had never been included. If any possible construction of this Ordinance shall be contrary to any law or found unenforceable, then ipso facto such provisions shall automatically be reformed to conform with any law or legal decision.

Section 7

EFFECTIVE DATE

7.01 Effective Date

This Ordinance shall take effect and be in force on August 23, 2004, and shall be entered in the Minutes of the District.

On motion duly made and seconded, this Ordinance was adopted by the following vote on May 24, 2004.

AYES: Kite, Lathi, Smith, Toy, Wilkowsky

NOES: ---

ABSENT: ---

Pat Kite
Chairperson, Board of Directors
UNION SANITARY DISTRICT

ATTEST:

Anjali Lathi
Secretary, Board of Directors
UNION SANITARY DISTRICT

This is an Official Image of a Certified USD Document

Adopted May 24, 2004
Resolution #2416

Sewer System
Management Plan (SSMP)

(iv.) Operation & Maintenance Program

a. CS Map
b. GIS Integration Layers
c. USD Transport System Schematic
d. USD Block Book Grid
e. Fiscal Operating Budget
f. CS PMP Programs Mission Statement & Schedules
g. Fiscal Training Plan
h. Contingency Equip-Replacement Inventories
i. Vehicle-Equip Renew-Replacement
j. Public Notices/Newsletters
k. Preventing Spills-Impact to Environment Brochure
l. Traps & Vents Brochure

Union Sanitary District Service Area Location Map

Reviewed: Oct-19

GIS – CMMS Integration

The GIS application is a web-based applications using ArcGIS Server (ESRI) and Infor GIS to provide the map services and applications. Infor GIS acts as a front-end to ArcGIS Server and handles the connection to the CMMS (Hansen) system MS SQL Server database. The application is in ASP.NET and XML. The application serves up the data from the GIS-CMMS interface by hyperlinks with the sewer main's attributes, or by special tool buttons on the application's tool bar. The GIS Server is a Dell Poweredge server with Windows Server 2008 R2 and IIS.

Some functions requiring the GIS-CMMS integration are: (1) to be able to view the TV Inspection reports for the selected main including the TV Inspection number, the date, the operator, the upstream and downstream manholes, and the readings with distances from the camera setup, clock position of the lateral or defect observed, the code/defect, a short description, and the associated comment; (2) to list all of the past work orders for the sewer main to get some idea of whether it historically has had problems and what has been its maintenance history; and (3) to provide a Cleaning Area Report to monitor the 84-month maintenance program of the mains scheduled to be cleaned and checked for defects during that period. The Cleaning Area Report is a tool for the crews or supervisors to quickly view how the cleaning work is progressing; i.e. if 50% of the year or quarter is over then about 50% of the cleaning areas for that year or quarter should be completed. The report summarizes the number of mains and the total footage for the selected cleaning area, the number of mains and footage cleaned to date, and the calculated percentage completed. It also lists each main in the cleaning area, the length, and the date it was cleaned.

Infor GIS also includes a link to the digital videos of the TV inspections. The videos are streamed over the intranet to standard Windows media player software on the user's computer.

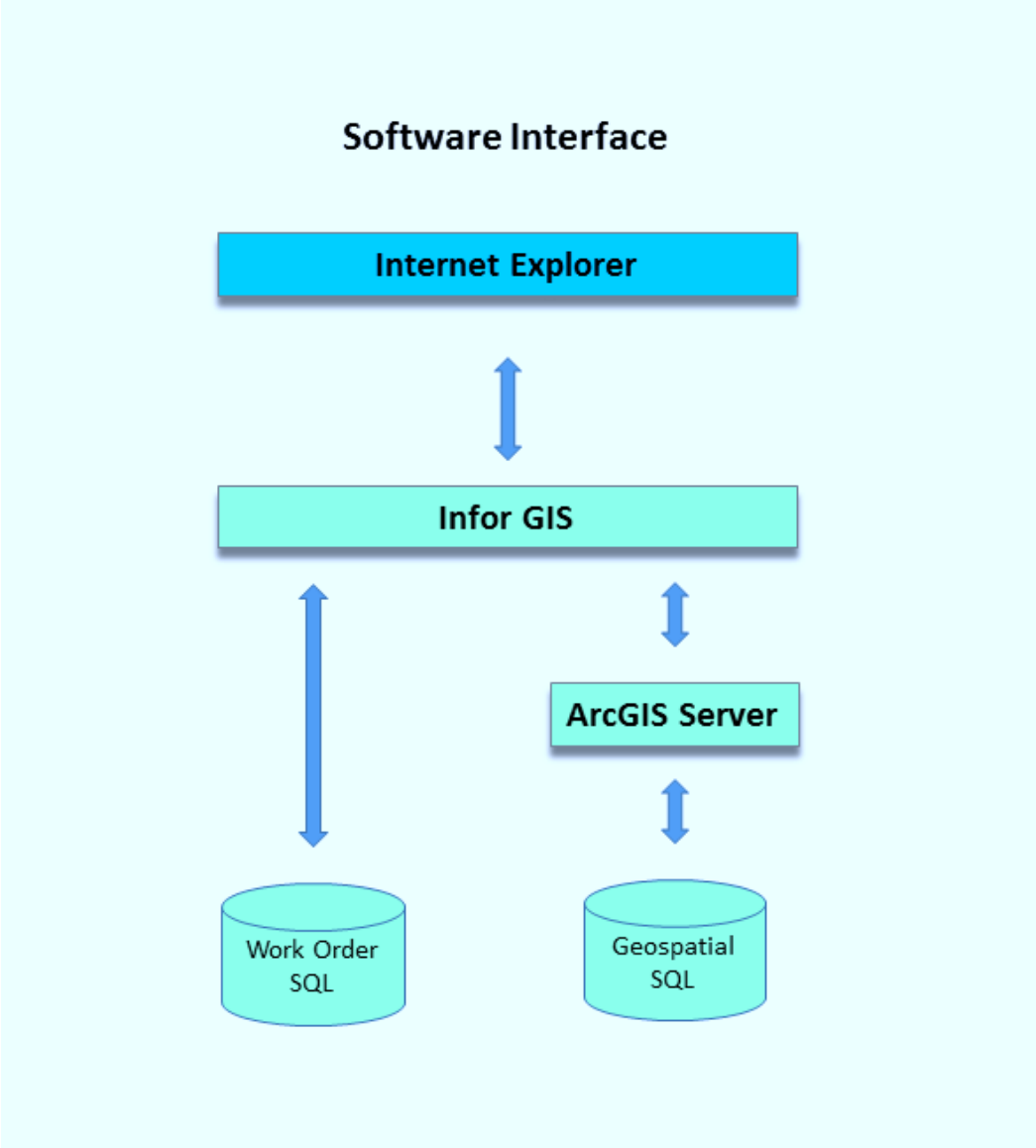
Software Interface
Internet Explorer
Infor GIS
ArcGIS Server
Work Order SQL
Geospatial SQL

GIS Data Layers		
		5/8/2017
Wastewater Layers – USD		
1	CIP Planned Projects	
2	CIP Projects Under Construction	
3	Sewer Mains	
4	Sewer Manholes	
5	Sewer Laterals	Extracted from TV Inspections
6	Sewer Easements	
7	Sewer Mains Historical	
8	Sewer Manholes Historical	
9	Cleaning Areas	72 Month Maintenance Cleaning Areas
10	Cleaning Subsections	72 Month Maintenance Cleaning Subsections
11	Cleaning Sections	72 Month Maintenance Cleaning Sections, A-F
12	Drainage Basins	
13	2005 Plant 1' Contours	Alvarado Wastewater Treatment Plant
14	2005 Plant Spot Elevations	Alvarado Wastewater Treatment Plant
15	Odor Complaints	
16	Spills	
17	Sewer Main Defects	Extracted from TV Inspections
18	EC Dischargers	Environmental Compliance Inspection Sites
19	Restaurants	Environmental Compliance Inspection Sites
Other Utility Layers		
20	Water Mains	
21	Water Valves	
22	Water Hydrants	
23	Water Hydrant Laterals	
24	Stormwater Inlets/Manholes	
25	Stormwater Mains	
Landbase Layers		
26	Contours 2002	
27	Spot Elevations 2002	
28	Contours 1999	
29	Survey Controls	
30	Fault Trace - Hayward Fault	
31	Freeways	
32	Major Roads	
33	Streets	
34	Railroads	
35	Streams	
36	ROW Public	
37	ROW Private	
38	Curbs	
39	Parcels	Maintained with Digital Submittals
40	Buildings	
41	New Construction	New infrastructure from Digital Submittals
42	Block Book Grid	
43	Lakes	
44	Jurisdiction	City boundaries
45	Tracts	
Aerial Photos		
46	2003 Color Orthophotos	
47	2002 Color Orthophotos	
48	1999 B/W Orthophotos	
49	USGS Topo Map	
50	2005 Plant Color Orthophoto	Alvarado Wastewater Treatment Plant
51	2003 Hayward Marsh aerial photo	

52	2006 Aerial Photos	
53	2009 Aerial Photos	
54	2014 Aerial Photos	

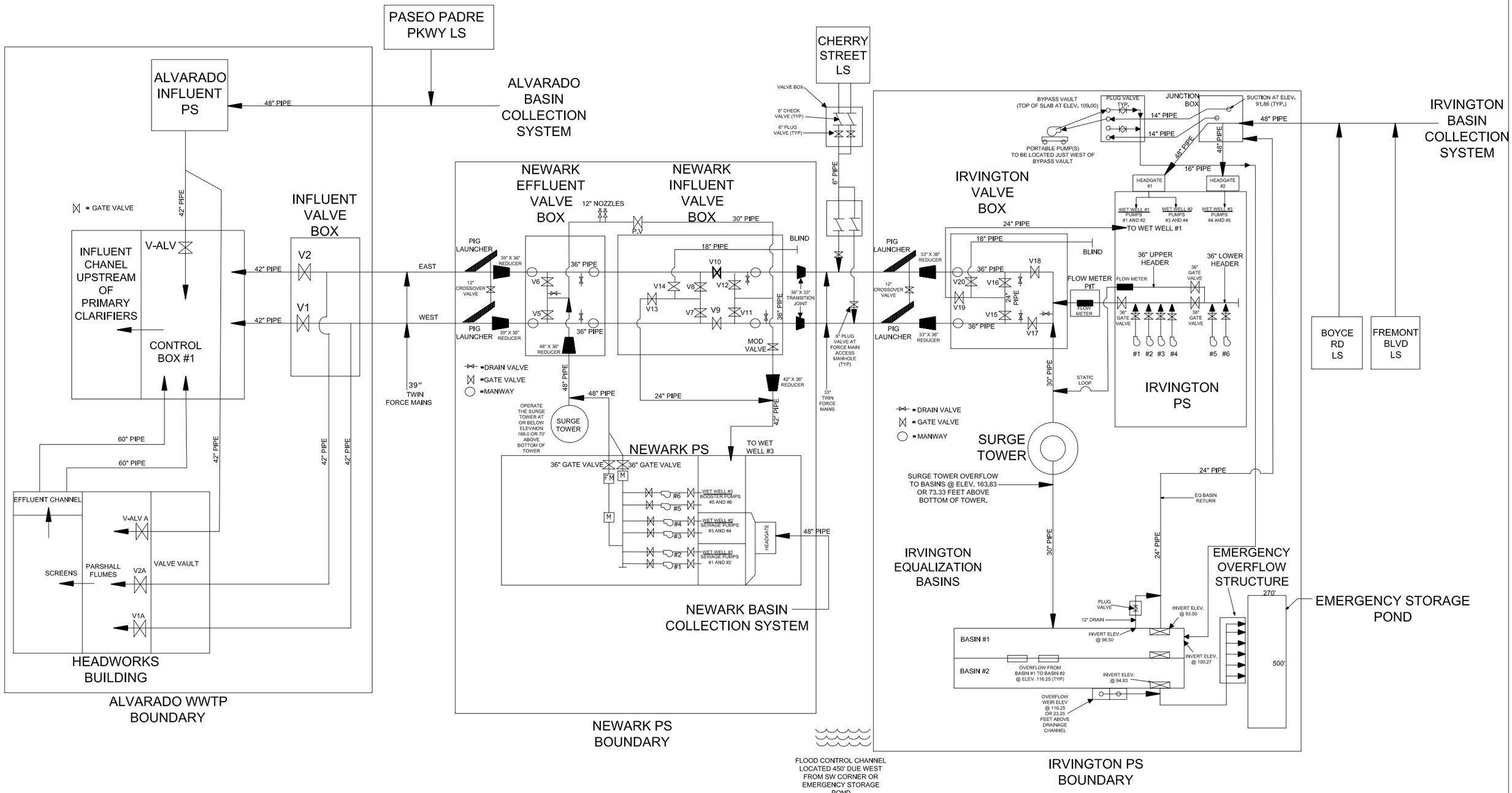

UNION SANITARY DISTRICT TRANSPORT SYSTEM SCHEMATIC

UNION SANITARY DISTRICT
BLOCK BOOK GRID INDEX

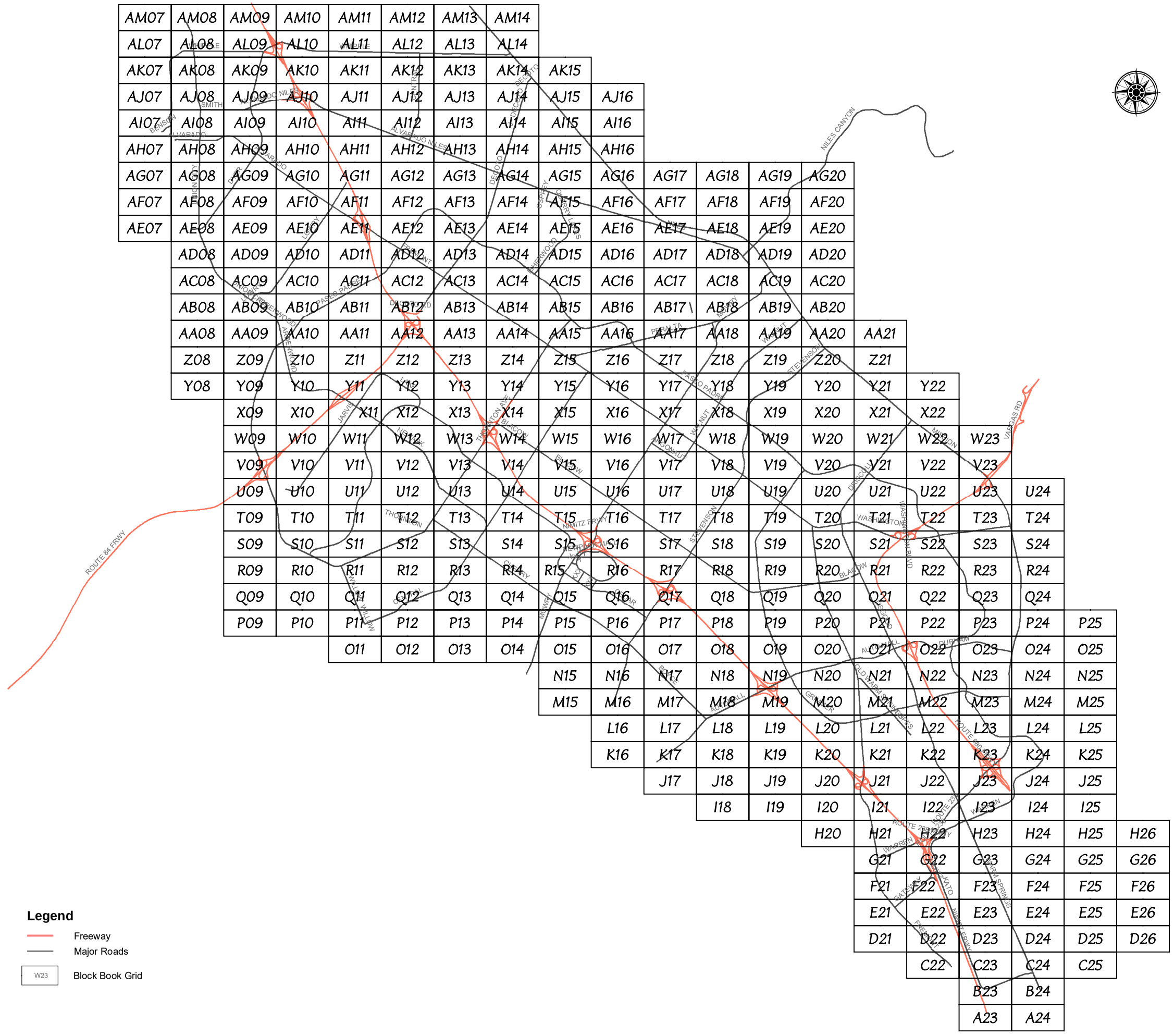

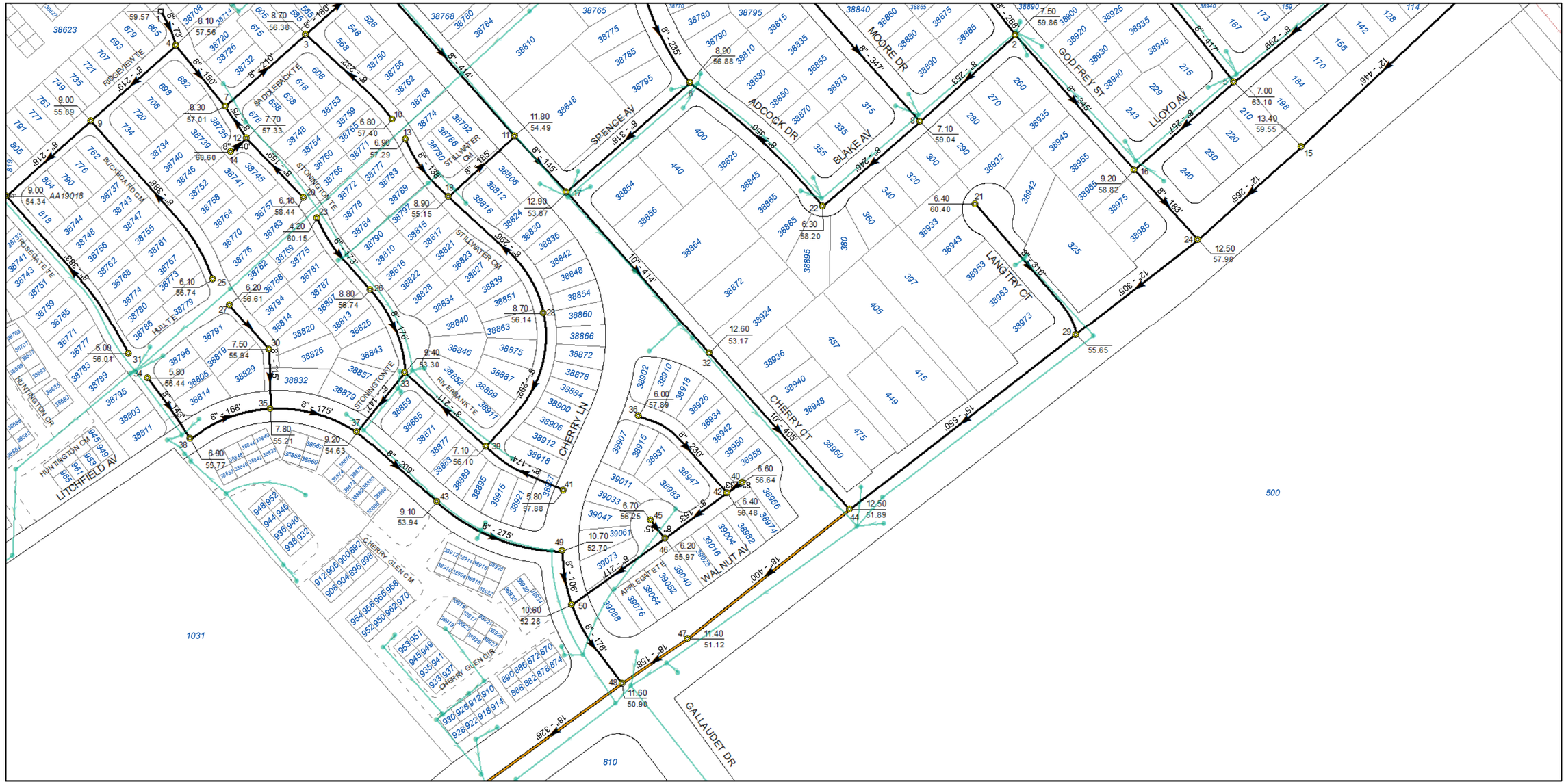

LEGEND

- MANHOLE
- RISER
- CAP
- LAMPHOLE
- LIFT STATION
- PUMP STATION
- ABANDONED SEWER MANHOLE
- STORM DRAIN MANHOLE
- JUNCTION STRUCTURE
- FORCE MAIN ACCESS MANHOLE
- FORCE MAIN AIR RELEASE VALVE
- FORCE MAIN BLOW OFF
- SHEET PILES

- LINED MAIN
- SEWER MAIN
- TRUNK MAINS
- SIPHON MAINS
- OVERFLOW MAINS
- FORCE MAINS
- EBDA FORCE MAINS
- ABANDON SEWER MAINS
- STORM DRAIN
- PUBLIC RIGHT-OF-WAY
- PRIVATE RIGHT-OF-WAY
- B.A.R.T. TRACKS
- OTHER RAILROAD TRACKS
- EARTHQUAKE FAULT

- PROPERTY BOUNDARY
- ACFC & WCD PROPERTY (FLOOD CONTROL CHANNELS)
- ACWD PRIORITY 1 NOTIFICATION AREA
- ACWD PRIORITY 2 NOTIFICATION AREA
- SEWER EASEMENTS
- MAINTENANCE EASEMENTS
- USAGE AREAS
- SHEET PILES
- 10.00 MANHOLE DEPTH
- 20.00 FLOWLINE INVERT ELEVATION
- 12345 PARCEL ADDRESS

NOT FOR SALE OR REPRODUCTION

The information on this map is provided by Union Sanitary District (USD) for internal use only. Information shown on this map is derived from multiple sources which may not be current or is outside the control of USD. The elevations shown on this map have NOT been field verified and should not be assumed to be accurate. Any person or entity relying solely on the information shown on this map does so at their own risk.

N

0 100 200 400 Feet

AB18	AB19	AB20
AA18	AA19	AA20
Z18	Z19	Z20

AA19

Revised: March 1, 2018

Union Sanitary District

Union City, California

Adopted Operating & CIP Budget

FY 2020

This page intentionally left blank

Directors
Manny Fernandez
Tom Handley
Pat Kite
Anjali Lathi
Jennifer Toy

Officers
Paul R. Eldredge
General Manager/
District Engineer

Karen W. Murphy
Attorney

DATE: June 24, 2019

MEMO TO: Board of Directors - Union Sanitary District

FROM: Paul R. Eldredge, General Manager/District Engineer
Laurie Brenner, Finance & Acquisition Services Coach

SUBJECT: Fiscal Year 2020 Adopted Operating and CIP Budget

Union Sanitary District (USD) staff is pleased to present the comprehensive annual budget for Fiscal Year (FY) 2020 to the Board of Directors. This budget covers the period from July 1, 2019 through June 30, 2020. The District continues to focus on the operation and maintenance of its infrastructure and assets, capital project construction, planning, and effective use of technology.

Outstanding Performance and Cost-Effective Service for the District's Customers

In keeping with our Mission, the District continues to provide a high level of award-winning service to its customers at competitive rates. During FY 2016, USD conducted a major Cost of Service Analysis (COSA) to determine a five-year rate plan that met all requirements related to charges for services under Proposition 218. The COSA took into consideration current and future operational and capital costs, and reserve requirements for the next five years. The study provided the District with a baseline against which we can analyze future USD needs. The Sewer Service Charge for FY 2020 incorporates the fourth rate increase of the five-year rate increase plan. The annual single-family rate will increase from $407 to $421 in FY 2020, and to $436 by the fifth year (FY 2021). This increased rate is still well below the national average annual sewer service charge of $504 as reflected in the 2018 National Association of Clean Water Agencies price index. The average annual rate of the 35 Bay Area agencies the District surveys is $623.40.

We continue the District's record of outstanding stewardship and service. Once again, USD received the Platinum Award from the National Association of Clean Water Agencies for Peak

Performance for operating for ten consecutive years without exceeding the limits or conditions of the District's permit. This is a tribute to the outstanding work by District Operations and Maintenance teams. We continue to average less than one spill per hundred miles of pipeline per year, ranking us among the best in the State, while doing so in a very cost-effective manner. The District Collections Services and Environmental Compliance groups have successfully implemented measures to minimize spills and back-ups.

Financial State of the District

The current (general) improvement in the economy has had positive effects on the District. Revenues are increasing over the prior fiscal year, but we anticipate a slight decrease in development activity in our service area. While economic improvements have proven beneficial, the District continues to exercise fiscal prudence considering our ever-increasing expenses. It is because of this cautionary approach that the District has continued to remain financially healthy.

USD has seen slight decreases in permit applications in the past twelve months, and that is expected to continue in FY 2020. A portion of USD capital projects is funded by capacity fees; however, the majority are funded through Sewer Service Charges. The District continues to be vigilant in its efforts to control expenses. Like other agencies, USD faces significant pressures associated with the costs of health care and pensions, as well as costs for treatment plant chemicals and utilities (primarily PG&E), in addition to other capital expenditures.

Revenues

Sewer Service Charges are expected to increase from $57 million in FY 2019 to $60 million in FY 2020 due to previously approved rate increases and the addition of new users. With approximately 73.41% of the District's revenue based on residential customers; USD's income remains relatively stable despite the slight volatility in non-residential revenues.

Capacity Fee revenues incorporate increased Capacity Fees approved by the Board, effective July 1, 2016. As previously stated, the Tri-City area has experienced a continued increase in construction development; however, there are indicators that this trend is beginning to slow down. As a result, total Capacity Fee revenues are expected to come in at $13.6 million in FY 2020, which is below both the 2019 actual and original FY 2019 budgeted values. Anticipated expenditures associated with capacity fees over the next several years indicate that there will likely be an overall declining balance in this fund, starting in FY 2020 as projects associated with the Plant Master Plan begin at the District.

Expenditures

Total expenditures in the Sewer Service Fund for the coming fiscal year are projected to increase by 23.2%. Operating expenses are anticipated to increase by 9.5%, primarily due to salary and pension contribution rate increases, as well as the addition of professional consulting

services intended to support training necessary for long-term succession planning. Chemical costs had been relatively stable due to the District's participation in the Bay Area Chemical Consortium for many years; however, significant increases in several chemicals utilized in the treatment process are reflected in the FY 2020 budget.

No significant changes to the number of District employees are budgeted during this fiscal year. The District filled many vacancies during FY 2019, mostly attributable to planned retirements, with just a few voluntary separations. Balancing the District's ability to attract and retain a qualified workforce against the bottom line will continue to be a challenge as more of our tenured workforce becomes eligible for retirement.

Capital project spending will continue to focus on rehabilitation and replacement of key elements of the wastewater treatment plant and collections system pipeline. Many of the District's buildings and treatment processes have been in operation for over 35 years. Replacing and upgrading these facilities and equipment will ensure that we can efficiently operate the plant in the long-term. Projects for FY 2020 include plant facilities improvements such as a seventh anaerobic digester, standby power generation system upgrades, and pump station improvements.

Staff conducted a thorough analysis of the infrastructure needs of the District and developed a 20-year Capital Improvement Plan (CIP) that totals approximately $1.09 billion. The total CIP budgeted for FY 2020 is just over $21.9 million, compared to $10.2 million in FY 2019. USD continues to keep its CIP costs as low as possible by taking advantage of available low interest loans through the State and federally funded Clean Water State Revolving Fund (SRF) program administered by the State Water Resources Control Board (as available), although the District continues to explore alternative financing methods that give the District greater flexibility while still meeting our policy requirements for debt.

The Information Systems Renewal and Replacement (R&R) Program will continue to fund new projects, such as Non-Residential Billing Program Replacement, the replacement of older servers and hardware for business continuity, and disaster recovery.

Special Projects Fund expenditures will increase from $1.4 million in FY 2019 to just over $4.3 million in FY 2020. Of the $4.3 million, $352,000 is for special projects that will carry forward to FY 2020. Some of the studies planned or continuing this year include the Old Alameda Creek Report of Discharge, Odor Control Pilot Study and the IT Master Plan. Other expenditures include those for the Outreach programs, including the USD newsletter, and GIS Joint Powers Authority (JPA).

Balanced Budget, Reserves and Rates

USD has long operated with a balanced budget and FY 2020 is no exception. District reserves continue to be stable.

Conclusion

The District's high level of service and competitive rates reflect its highly efficient and customer-oriented staff. The District is fortunate to have a very talented and dedicated workforce. The District is firmly committed to meeting every challenge brought forth while building a premier organization. This budget enables us to continue to move forward in meeting those challenges. By continuing to follow the budget policy set forth by the District, we will continue to deliver the highest level of service hopefully for the next 100 years, and beyond.

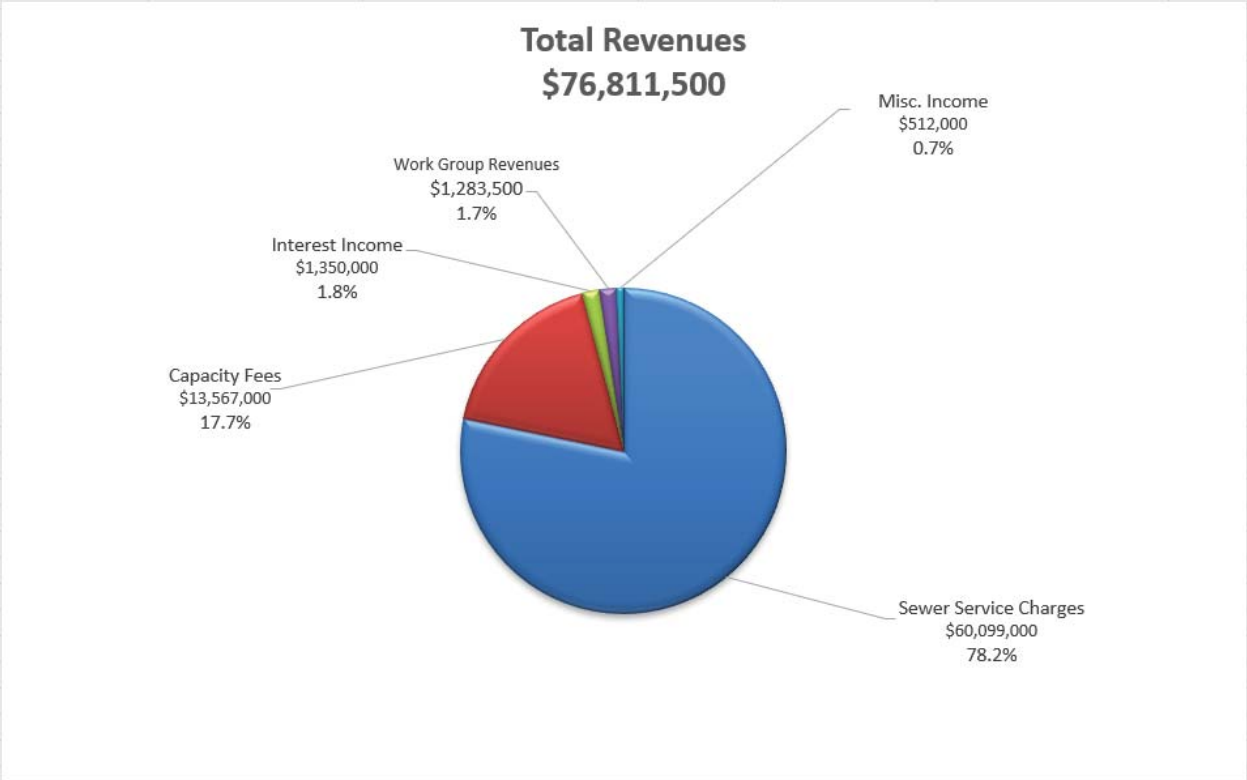
Total Revenues
$76,811,500
Misc. Income
$512,000
0.7%
Work Group Revenues
$1,283,500
1.7%
Interest Income
$1,350,000
1.8%
Capacity Fees
$13,567,000
17.7%
Sewer Service Charges
$60,099,000
78.2%

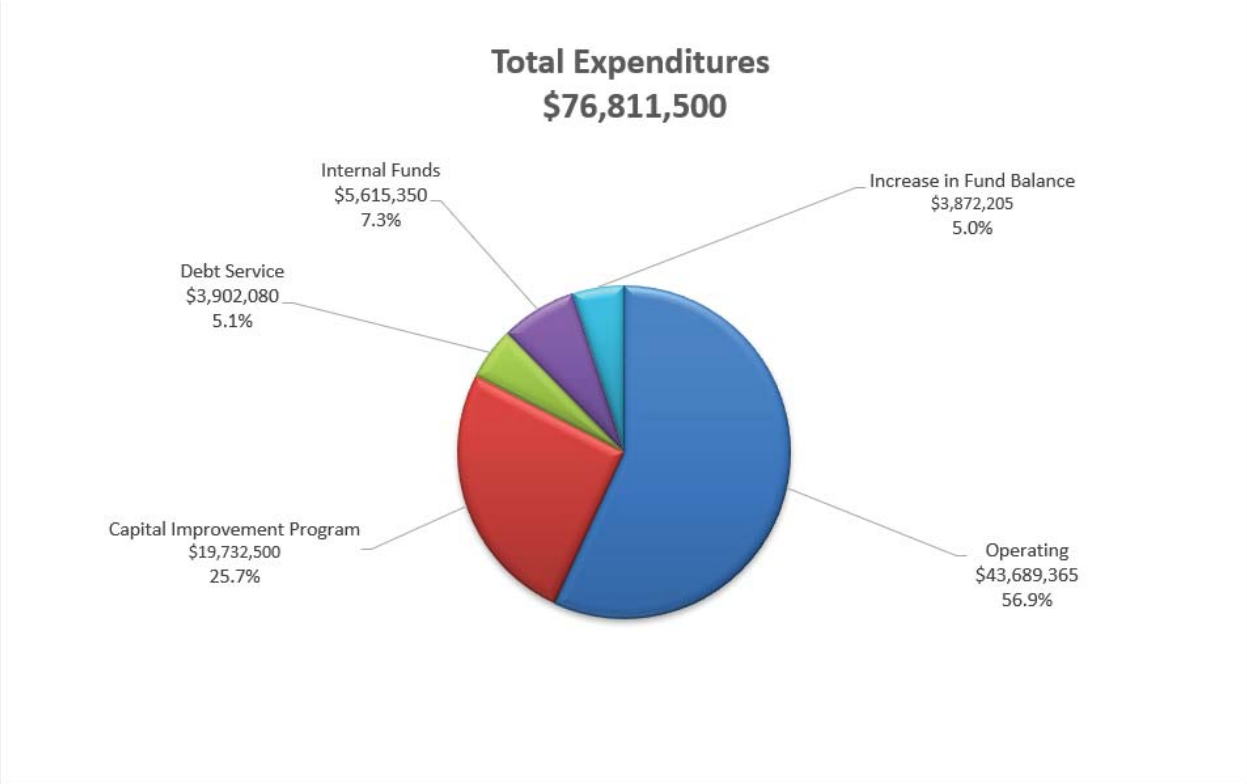
Total Expenditures
$76,811,500
Internal Funds
$5,615,350
7.3%
Increase in Fund Balance
$3,872,205
5.0%
Debt Service
$3,902,080
5.1%
Capital Improvement Program
$19,732,500
25.7%
Operating
$43,689,365
56.9%

This page intentionally left blank

SUMMARY AND COMMENTS
FISCAL YEAR 2020 BUDGET

Budget Summary – All Funds (Sewer Service and Capacity Funds)

	Budget FY 2019	Estimated Actual FY 2019	Adopted Budget FY 2020	% Change
Total Revenues				
Sewer Service Charges	$57,016,142	$58,250,000	$60,099,000	5.4
Capacity Fees	16,211,521	14,238,350	13,567,000	(16.3)
Work Group Revenues	1,326,550	1,264,672	1,283,500	(3.2)
Interest	650,000	2,000,000	1,350,000	107.7
Other	250,000	1,294,800	512,000	104.8
SRF Loan Proceeds	0	0	0	0
Total Revenues	**$75,454,213**	**$77,047,822**	**$76,811,500**	**1.8**
Total Expenditures				
Operating	$39,902,746	$39,532,067	$43,689,365	9.5
Capital Projects (90%)	9,292,500	7,200,000	19,732,500	112.3
Debt Service	3,902,080	3,902,080	3,902,080	0.0
Special Projects	1,410,000	840,005	4,354,600	208.8
Other Internal Funds	1,872,501	1,706,201	1,260,750	(32.7)
Total Expenditures	**$56,379,827**	**$53,180,353**	**$72,939,295**	**29.4**
Revenues in Excess of Expenditures – To Reserves	**$19,074,386**	**$23,867,469**	**$3,872,205**	**(79.7)**

Adopted Combined Budget – Sewer Service and Capacity Funds

	Sewer Service Fund (Incl Fund 80)	Capacity Fund (Fund 90)	Total
Total Revenues			
Sewer Service Charges	$60,099,000	$0	$60,099,000
Capacity Fees	0	13,567,000	13,567,000
Work Group Revenues	1,283,500	0	1,283,500
Interest	850,000	500,000	1,350,000
Other	387,000	125,000	512,000
SRF Loan Proceeds	0	0	0
Total Revenues	**$62,619,500**	**$14,192,000**	**$76,811,500**
Total Expenditures			
Operating	$43,689,365	$ 0	$43,689,365
Capital Projects (90%)	12,132,000	7,600,500	19,732,500
Debt Service	2,785,617	1,116,463	3,902,080
Special Projects	4,354,600	0	4,354,600
Other Internal Funds	1,260,750	0	1,260,750
Total Expenditures	**$64,222,332**	**$8,716,963**	**$72,939,295**
Revenues in Excess of Expenditures – To Reserves	**($1,602,832)**	**$5,475,037**	**$3,872,205**

SEWER SERVICE FUND

The FY 2020 budget for the Sewer Service Fund is presented below:

	Budget FY 2019	Estimated Actual FY 2019	Adopted Budget FY 2020	% Change
Total Revenues				
Sewer Service Charges	$57,016,142	$58,250,000	$60,099,000	5.4
Work Group Revenues	1,326,550	1,264,672	1,283,500	(3.2)
Interest	375,000	1,000,000	850,000	126.7
Other	125,000	1,169,800	387,000	209.6
SRF Loan Proceeds	0	0	0	0
Total Revenues	**$58,842,692**	**$61,684,472**	**$62,619,500**	**6.4**
Total Expenditures				
Operating	$39,902,746	$39,532,067	$43,689,365	9.5
Capital Projects (90%)	6,142,500	5,100,000	12,132,000	97.5
Debt Service	2,785,617	2,785,617	2,785,617	0.0
Special Projects	1,410,000	840,005	4,354,600	208.8
Other Internal Funds	1,872,501	1,706,201	1,260,750	(32.7)
Total Expenditures	**$52,113,364**	**$49,963,890**	**$64,222,332**	**23.2**
Revenues in Excess of Expenditures – To Reserves	**$6,729,328**	**$11,720,582**	**($1,602,832)**	**(123.8)**

REVENUES: Revenues in the Sewer Service Fund are anticipated to increase 5.4% in comparison to the FY 2019 budget. With respect to the estimated actual amounts for FY 2019, the FY 2020 budget is 3.2% more. Each of the individual revenue elements is discussed below:

Sewer Service Charges: The principal revenue source for the Sewer Service Fund is the annual Sewer Service Charges, estimated to be just over $60 million in FY 2020. This is 5.4% more than the prior year's budget amount. For the last two years the budget estimate has been based on a new wastewater rate and cost of service study, resulting in the adoption of a five-year rate plan in January 2016, pursuant to the requirements of Proposition 218. The existing annual sewer service charge for Single Family Dwellings (SFD) will increase from $407.12 in FY 2019 to $421.37 in FY 2020 (an increase of 3.5%), and the annual Multi-family Dwelling rate will increase from $352.97 in FY 2019 to $365.32 in FY 2020 (also an increase of 3.5%). Residential rates account for 73.41% of total sewer service charge revenues. For non-residential customers, rates are calculated annually using flow based on water usage and sewage strength.

Work Group Revenues: These revenues consist of things like field inspection fees, plan check fees, permits, external work orders, and services provided to the City of Fremont's Urban Runoff program. Because these items tend to vary based on external demands, anticipated revenues are typically estimated in a conservative manner. The FY 2020 budget estimate is $43,050 (3.2%) lower than the prior year's budget amount.

Interest: Interest income is expected to increase 126.7% from the FY 2019 budget amount. This change is based on new, high yield investment instruments being added to the portfolio and strong returns projected based on a strong economy. All indications are that the Federal Reserve will keep interest rates flat rates even if the overall economy continues to strengthen.

Other: Other revenues consist of rebates from the Self-Generation Incentive Program (SGIP) administered by the California Public Utilities Commission (CPUC) related to cogeneration and other miscellaneous income, including the sale of surplus equipment. This item is expected to increase by 209.6% from the FY 2019 budget amount, primarily because of the end of the PG&E solar rebate program which impacted last year.

SRF Loan Proceeds: Although the State Revolving Fund (SRF) has been, and will likely continue to be, an ongoing source of funding for District capital needs, no SRF loan proceeds are anticipated to be received in FY 2020.

EXPENDITURES: Expenditures in the Sewer Service Fund are anticipated to increase 23.2% in comparison to the FY 2019 budget. Each of the individual expenditure elements is discussed below:

Operating: Operating expenditures are those required for the day-to-day operations of the District, including maintenance, regulatory activities, engineering, and administration. Operating expenditures are estimated to increase 9.5% in FY 2020. Of that increase, 9.0% is due primarily to salaries and benefits adjustments in accordance with the District's Memorandum of Understanding (MOU) with its classified employees, performance-based merit increases for the Unclassified staff, and increased California Public Employees' Retirement System (CalPERS) contributions.

Below is additional information about the components of salaries and benefits:

	Budget FY 2019	**Adopted Budget FY 2020**	**Dollar Change**	**% Change**
Wages	$17,198,665	$18,396,408	$1,197,743	7.0
CalPERS Contributions	4,433,146	5,432,246	999,100	22.5
Workers' Compensation	314,142	322,808	8,666	2.8
Other (Medical, Medicare)	3,758,768	3,858,369	99,601	2.6
Vacancy Factor (2%)	(508,028)	(552,952)	(44,924)	8.8
Total Salaries and Benefits	**$25,196,693**	**$27,456,879**	**$2,260,186**	**9.0**

Increased payments to CalPERS are the result of both increased wages an increase in the CalPERS contribution rate, from 25.359% in FY 2019 to 29.203% in FY 2020, resulting in a 22.5% overall increase in payments to CalPERS. Workers' compensation costs have increased because of increased wages (upon which workers' compensation premiums are based) and an anticipated 5% rate increase. Medical amounts are increasing in accordance with the MOU. Consistent with prior years, salaries and benefits include a 2% vacancy factor, in recognition of the fact that vacancies occur throughout the year and are not immediately refilled.

Below is information about the Fund 20 components of Operating expenditures, which include salaries and benefits:

Work Group	Budget FY 2019	Estimated Actual FY 2019	Adopted Budget FY 2020	% Change
Board of Directors	$ 179,111	$ 168,685	$ 179,176	0.04
General Manager	1,043,506	933,668	1,066,367	2.2
Business Services	3,762,036	3,581,223	4,342,142	15.4
Collection Services	6,888,192	6,784,531	7,316,485	6.2
Technical Services	6,354,451	6,087,921	6,639,720	4.5
Treatment & Disposal Services	10,444,839	10,382,197	11,299,505	8.2
EBDA	1,581,000	1,233,000	1,614,002	2.0
Fabrication, Maintenance, and Construction	8,264,515	8,500,202	8,837,462	6.9
Non-Departmental	652,008	679,457	910,506	39.7
Total Operating Expenditures	**$39,169,658**	**$38,350,884**	**$42,205,365**	**7.8**

Salaries and benefits account for 65.1% of total operating expenditures in FY 2020 (up slightly from 64.5% in FY 2019). In addition to salary and benefit increases discussed above, some of the other reasons for the 7.8% increase in operating expenditures are as follows:

- Actual costs for Districtwide accounts (telephones, training, insurance premiums and other miscellaneous items) are projected to increase
- Treatment & Disposal is projecting significant increases in chemical and energy costs associated with treatment processes
- Fabrication, Maintenance, and Construction expects to incur additional costs due to increased maintenance needs for aging infrastructure, the purchase of standby pumps as a contingency plan for a force main or pump station outage, and utility rate increases from Alameda County Water District (ACWD) and PG&E

District-wide training, property insurance, and telephones, that benefit the entire District, not just one or two individual work groups were placed into a Non-Departmental category in FY 2018. This change will remain in effect and has been beneficial in tracking District-wide expenses. The FY 2020 budget continues to reflect this change.

Districtwide training is anticipated to increase as it remains a pillar in the District's strategic planning efforts.

Capital Projects: This line item is discussed separately later in this document.

Debt Service: This line item is discussed separately later in this document.

Special Projects: This line item includes non-routine expenditures for things like one-time studies, hiring consultants, and new programs where the long-term financial impact, if any, is not known. A detailed listing of Special Projects is included later in this document.

Other Internal Funds: These are separate components of the Sewer Services Fund that account for renewals and replacements of vehicles, equipment and technology. Below is detailed information about this line item:

	Budget FY 2019	**Estimated Actual FY 2019**	**Adopted Budget FY 2020**	**% Change**
Renewal & Replacement – Vehicles and Equipment (Fund 50)	$660,201	$660,201	$153,050	(76.8)
Renewal & Replacement – Information Systems (Fund 60)	712,300	746,000	857,700	20.4
Renewal & Replacement – Plant and Pump Station (Fund 70)	500,000	300,000	250,000	(50.0)
Total Other Funds	**$1,879,501**	**$1,706,201**	**$1,260,750**	**(39.9)**

- Renewal & Replacement – Vehicles and Equipment: Vehicles and equipment that are scheduled to be replaced due to age or obsolescence are purchased through this fund. The provision is now based on a conditional assessment/age specific replacement schedule and expenditure projection. The vehicles scheduled for replacement in FY 2020 are as follows (no equipment is included in the plan this year):

Vehicles:	
ARV Support Truck	$125,000
Construction Inspector's Vehicle	28,050
Total Vehicles	**$153,050**
Equipment:	
No Equipment in FY20	$0
Total Vehicles and Equipment	**$153,050**

As noted in the table above, two vehicles were approved for purchase in FY 2020 and no equipment purchases are planned. Therefore, estimated actual expenditures in FY 2020 are significantly less than the FY 2019 budget amount.

- Renewal & Replacement – Information Systems: The FY 2020 budget for Information Systems renewal and replacement consists of the following:

Hardware (Desktops, Switches, Servers, Routers, etc.)	$367,700
SharePoint Upgrade	125,000
IT Various Projects (Eg. CMMS, ECMS and LIMS updates)	125,000
Replace Non-Residential Billing (NRB) Program	100,000
GIS – Various	90,000
Remote Site Security Keypads	50,000
Total Information Systems	**$857,700**

- Renewal & Replacement – Plant and Pump Station: Plant and pump station renewals and replacements anticipated in FY 2020 consist of the following:

12" Portable Pump	130,000
Unplanned Maintenance	90,000
(4) Samplers	30,000
Total Plant and Pump Station	**$250,000**

Sewer Service Fund Reserves: In accordance with debt covenants and District Policy No. 2090, "Reserves, Allocations and Fund Balance," the District maintains several reserves in the Sewer Service Fund. In FY 2020, approximately $1.6 million is anticipated to be transferred from reserves. This is planned based on projected CIP needs and is expected to continue for at least the next five to seven years but is not considered a concern. A summary of the various reserve/allocation budgets for FY 2020 is shown in the following table:

Reserve/Allocation Descriptions	**Adopted Budget FY 2020**
Cash Flow	$21,844,683
Structural Renewal & Replacement	44,178,000
Emergency	5,750,000
Short Term Liquidity	5,000,000
SRF Loan Contingency	3,902,080
Liability Insurance	1,000,000
Information Systems Renewal & Replacement	857,700
Industrial Customer Stabilization	500,000
Vehicle & Equipment Renewal & Replacement	153,050
Total Reserves/Allocations – Sewer Service Fund	**$83,185,513**

A description of each reserve and its target funding level is as follows:

- ***Cash Flow*** – Sewer Service Charge revenues are collected by the Alameda County Tax Collector's Office and remitted to the District in two major installments in April and December of each year. For the District to pay its ongoing expenditures throughout the year, it reserves between three and six months (25-50%) of gross operating expenditures at the start of each fiscal year.

- ***Structural Renewal & Replacement*** – To maintain the ability to renew and replace infrastructure, this reserve is funded at the average annual renewal/replacement capital costs based on the 10-year CIP. This is a conservative approach.

- ***Emergency*** – In order to help mitigate the financial impacts of an emergency or catastrophic event, the District has an Emergency Reserve. The target for FY 2020 is $5.75 million.

- ***Industrial Customer Stabilization***- The District has several Significant Industrial Users (SIUs). This reserve allows the District to implement appropriate responses and actions should one or more of these SIUs significantly scale back or cease operations unexpectedly, resulting in a rapid loss of revenue to the District.

- ***SRF Loan Contingency*** – The District is eligible to apply for low interest rate loans through the State of California to finance capital projects. A requirement of these loans is the establishment and maintenance of a contingency reserve that is defined in the loan documents. The reserve balance is set at the amount required in the loan documents, typically one annual payment per loan.

- ***Short-Term Liquidity*** – The District maintains a minimum amount of immediately available funds, to cover the rolling 6-month average monthly payroll, plus a rolling 6-month average of the monthly accounts payable, held in a local bank account, in cash deposits.

- ***Liability Insurance*** – The District is a member of and purchases liability insurance from the California Sanitation Risk Management Association (CSRMA). The deductible of $500,000 reduces the amount of premiums charged to the District. In order to account for an event that is either not covered by insurance or under the deductible amount, the District reserves two times the annual deductible amount, based on claims history.

- ***Information Systems Renewal & Replacement*** – To maintain the ability to replace computer hardware and software, this fund is allocated at the actual planned annual information systems renewal/replacement costs, plus approved carry over from the previous year.

- ***Vehicle & Equipment Renewal & Replacement*** – To maintain the ability to replace the District's fleet and major equipment, this fund is allocated at the actual planned annual equipment renewal/replacement costs, plus approved carry over from the previous year.

CAPACITY FUND

The FY 2020 budget for the Capacity Fund is presented below:

	Budget FY 2019	Estimated Actual FY 2019	Adopted Budget FY 2020	% Change
Total Revenues				
Capacity Fees	$16,211,521	$14,238,350	$13,567,000	(16.3)
Interest	275,000	1,000,000	500,000	81.8
Other	125,000	125,000	125,000	0.0
SRF Loan Proceeds	0	0	0	0.0
Total Revenues	**$16,611,521**	**$15,363,350**	**$14,192,000**	**(14.6)**
Total Expenditures				
Capital Projects (90%)	$3,150,000	$2,100,000	$7,600,500	141.3
Debt Service	1,116,463	1,116,463	1,116,463	0.0
Total Expenditures	**$4,266,463**	**$3,216,463**	**$8,716,963**	**104.3**
Revenues in Excess of Expenditures – To Reserves	**$12,345,058**	**$12,146,887**	**$5,475,037**	**(55.6)**

REVENUES: Revenues in the Capacity Fund are anticipated to decrease 14.6% in comparison to the FY 2019 budget. Each of the individual revenue elements is discussed below:

Capacity Fees: The principal revenue source for the Capacity Fund is Capacity Fees, estimated to be $13.57 million in FY 2020. These fees are collected in accordance with the provisions of California Assembly Bill (AB) 1600 and are intended to mitigate the impacts of new development. In the case of the District, these fees are collected from new development as a requirement of connecting to the sewer system. As such, they can only be used for capital projects that increase the system's capacity to serve that new development. The last several years have seen significant new development in the Tri-Cities area of Fremont, Newark, and Union City. The pace of that development is expected to slow in FY 2020, resulting in a reduced revenue estimate as compared to FY 2019 actual. Pursuant to Ordinance No. 35.22, based on a capacity fee study and adopted by the Board in April 2016, capacity fees will increase annually through FY 2020. Capacity fees for Single Family Dwellings (SFD) will increase from $8,072 in FY 2019 to $8,898 in FY 2020 (an increase of 10.2%), and capacity fees for Multi-family Dwellings will increase from $6,919 in FY 2019 to $7,627 in FY 2020 (also an increase of 10.2%).

Interest: Interest income is expected to increase 81.8% from the FY 2019 budget amount and decrease 50% from the FY 2019 estimated actual amount. This overall increase is based on new, high yield investment instruments being added to the portfolio and strong returns projected based on a strong economy.

Other: Other revenues consist of rebates from the Self-Generation Incentive Program (SGIP) administered by the California Public Utilities Commission (CPUC) related to cogeneration.

SRF Loan Proceeds: Although the State Revolving Fund (SRF) has been, and will likely continue to be, an ongoing source of funding for District capital needs, no SRF loan proceeds are anticipated to be received in FY 2020.

EXPENDITURES: Expenditures in the Capacity Fund are anticipated to increase 104.3% in comparison to the FY 2019 budget. This is attributable to increased spending on capital projects. Debt service may also increase accordingly; however, funding sources have not yet been identified. These items are discussed in more detail later in this document.

Capacity Fund Reserves: In FY 2020, approximately $5.5 million is anticipated to be transferred to reserves. Because Capacity Fees are collected in accordance with AB 1600, they are subject to regulatory restriction. As a result, $69,093,531 is restricted for use on capital projects that increase the District's capacity to serve new development.

CAPITAL PROJECTS

Capital projects are accounted for in the Sewer Service Fund (Structural Renewal and Replacement [Fund 80]) and the Capacity Fund (Fund 90). The District adopts a 20-year Capital Improvement Plan (CIP) each year in conjunction with the adoption of the annual operating budget. Actual appropriations are established at 90% of the CIP amount for that year. Although spending for capital projects is anticipated to be higher in FY 2020 than in the prior year, it is also expected to continue to increase substantially over the next five years, as the result of the Plant Master Planning efforts. Through FY 2029, the CIP includes projects totaling over $644.4 million. By FY 2039, this amount will grow to $1.09 billion.

Below is information about capital projects spending for FY 2019 and FY 2020:

	Budget FY 2019	**Estimated Actual FY 2019**	**Adopted Budget FY 2020**	**% Change**
Sewer Service Fund – Structural Renewal and Replacement	$6,142,500	$5,100,000	$12,132,000	97.5
Capacity Fund	3,150,000	2,100,000	7,600,500	141.3
Total Capital Projects	**$9,292,500**	**$7,200,000**	**$19,732,500**	**112.3**

Key elements of the FY 2020 capital improvement program include ***design*** of the following projects:

- ***Master Plan Projects*** – Various concurrent and phased projects to rehabilitate and leverage existing assets and facilities associated with the activated sludge treatment process.

- ***Centrifuge Building Improvements*** – Various rehabilitation and improvement projects associated with final solids handling, odor control and conveyance systems at the centrifuge building in the treatment plant.

- ***Cherry Street Pump Station*** – Analysis and design of capacity upgrades to the existing pump station in support of local development.

- ***Digester No. 2 Inspection and Rehab*** -This project will include inspection and analysis of the exact condition of existing Digester No.2 and provide design for rehabilitation of the structure to maintain existing solids handling capacity.

- ***WAS Thickeners Replacement***– This project will replace the existing WAS thickeners to maintain existing solids handling capacity and provide improved treatment.

Key elements of the FY 2020 capital improvement program include ***construction*** of the following projects:

- ***Digester No. 7*** – The Plant Solids Capacity/Assessment Study identified a need for reliable solids capacity in the primary digester system and recommended the District construct new Primary Digester No. 7.

- ***Standby Power Generation System Upgrade*** – The plant's standby diesel generators are at the end of their useful lives, and the generator controls are obsolete and complicated to update and maintain. This project will replace the existing equipment with new generators and updated controls.

- ***Alvarado Influent Pump Station Improvements*** – This project will replace the station's wastewater pumps, variable frequency drives (VFDs), and electrical switchboard because they are at the end of their useful lives, and replacement parts are difficult to obtain because of lack of availability of original equipment and manufacturers' support.

- ***Emergency Outfall Outlet Improvements (Depending on Site Conditions)*** – The study and environmental impacts assessment for improvements to the Old Alameda Creek Outfall, potentially enabling the District to enhance our existing State Water resources Control Board discharge permit.

- ***Force Main Corrosion Repairs, Phase 3*** – The project consists of removing and replacing manways and appurtenances of air release valves, blow offs and access manways; welding new steel components; sandblasting and painting / coating existing and new components; implementing biological control measures / BMPs and site restoration; access improvements to three sites; and bollard improvements and other miscellaneous repairs throughout the District's service area.

- ***Headworks Screens Replacement*** – This project will install new mechanical bar screens at the Headworks Building to improve removal of debris from the wastewater prior to the plant's downstream processes, and to restore capacity and redundancy of the system.

- ***Gravity Sewer Rehab/Replacement at Various Locations throughout the Tri-Cities*** – The project will install full-length cured-in-place pipe (CIPP) lining of damaged sewer mains at several locations in the District's service area.

DEBT SERVICE

Debt service is related to capital projects and is accounted for in the Sewer Service Fund (Structural Renewal and Replacement [Fund 80]) and the Capacity Fund (Fund 90). The District has nine outstanding loans from the State Water Resources Control Board's Clean Water State Revolving Fund (SRF). Details about debt service payments are presented below:

Related Project	Sewer Service Fund – Structural Renewal and Replacement		Capacity Fund		Total Debt Service – FY 2020	Maturity Date
	FY 2019	FY 2020	FY 2019	FY 2020		
Irvington Equalization	$ 681,123	$ 681,123	$ 227,041	$ 227,041	$ 908,164	8/30/2023
Willow/Central Avenue	108,385	108,385	0	0	108,385	11/16/2027
Lower Hetch Hetchy	139,634	139,634	0	0	139,634	11/17/2028
Newark Pump Station	342,703	342,703	342,702	342,702	685,405	1/26/2030
Cedar Blvd. Corridor Rehab.	127,349	127,349	0	0	127,349	2/26/2030
Primary Clarifier Rehab.	442,337	442,337	147,446	147,446	589,783	1/15/2033
Substation 1	157,327	157,327	0	0	157,327	2/28/2032
Boyce Road Lift Station	205,532	205,532	205,532	205,532	411,064	7/31/2033
Thickener Control Building	581,227	581,227	193,742	193,742	774,969	3/31/2037
Total Debt Service	**$2,785,617**	**$2,785,617**	**$1,116,463**	**$1,116,463**	**$3,902,080**	

SPECIAL PROJECT EXPENDITURES

DESCRIPTION	Adopted Budget FY19	Estimated Actual FY19	Estimated Carryover	New $ (Provision)	Adopted Budget FY20
Administrative & Regulatory					
Anticipated Biosolids Coalition Membership Dues	$25,000	$0	$25,000	$0	$25,000
Anticipated Election Costs (Fremont, Newark & Union City; 164,200 registered voters)	0	0	0	820,600	820,600
GIS JPA	27,000	27,000	0	27,000	27,000
IBB Labor Negotiations Facilitation	20,000	305	0	0	0
Public Outreach Programs	100,000	81,000	19,000	131,000	150,000
Public Information Program	90,000	51,000	39,000	36,000	75,000
Property Acquisition	0	0	0	1,500,000	1,500,000
Recruitment	0	0	0	30,000	30,000
Sub-Total Administrative & Regulatory	***$262,000***	***$159,305***	***$83,000***	***$2,544,600***	***$2,627,600***
Studies & Other					
Air Permitting Consultant Assistance	50,000	0	0	0	0
Alvarado Sub-Surface Investigation (Plant Groundwater Monitoring)	10,000	5,933	4,067	3,933	8,000
Financial Master Plan	25,000	10,000	15,000	10,000	25,000
Forcemain Condition Assessment	10,000	4,094	5,906	24,094	30,000
IT Master Plan	200,000	86,000	114,000	0	114,000
Lateral Pilot Program - Condition Assessment	25,000	14,775	0	0	0
Local Limits Study	10,000	0	0	0	0
MBR Pilot Program	100,000	0	0	0	0
Newark Basin Master Plan/PACP Update	225,000	255,751	0	30,000	30,000
Odor Control Alternatives Studies	100,000	171,637	0	50,000	50,000
Plant Asset Condition Assessment Update	50,000	23,689	0	0	0
Plant Master Plan	100,000	100,000	0	75,000	75,000
Plant Solids System/Capacity Assessment	0	8,821	0	0	0
Seismic Evaluation	8,000	0	0	0	0
Treatment Plant IT Network Master Plan	135,000	0	130,000	0	130,000
Water Reclamation Pilot Program (Fill Station)	100,000	0	0	0	0
ACWD/SFPUC Joint Reclaimed Water Study	0	0	0	95,000	95,000
Capacity Fee Study	0	0	0	50,000	50,000
CIP Front End Specs Update	0	0	0	100,000	100,000
Cogen Options Evaluation	0	0	0	150,000	150,000
Cost of Service Analysis (COSA)	0	0	0	85,000	85,000
Forcemain Geotech Investigation at Alameda Creek	0	0	0	100,000	100,000
Irvington Basin MP Update	0	0	0	60,000	60,000
Odor Control Pilot Study	0	0	0	250,000	250,000
Old Alameda Creek Report of Waste Discharge (ROWD)	0	0	0	300,000	300,000
Pump Stations Odor Control Study	0	0	0	75,000	75,000
Sub-Total Studies & Other	***1,148,000***	***680,700***	***268,973***	***1,458,027***	***1,727,000***
Total Special Projects	**$1,410,000**	**$840,005**	**$351,973**	**$4,002,627**	**$4,354,600**

Annual Contract Purchases of Supplies, Services, and Vehicle and Equipment Renewal /Replacement
Over $100,000
for Fiscal Year 2020

	Estimated Expenditure
Supplies:	
Sodium Hypochlorite, 1-year contract with successful bidder	$686,000
Ferrous Chloride, 1-year contract with successful bidder	547,000
Hydrogen Peroxide, 1-year contract with Evoqua	487,000
Polymer, emulsion, 2-year contract with 3 optional 1-year renewals	454,000
Polymer, mannich, 2-year contract with 3 optional 1-year renewals	106,000
Total Supplies	**$2,280,000**
Services:	
CalPERS Retirement contribution payments for employees	$5,412,301
State Water Resources Control Board - Debt payments for nine SRF loans	3,902,080
CalPERS Medical - payments for employee coverage	3,515,632
PG&E - Alvarado site ($1,500,000) and Newark P.S. ($245,000)	1,745,000
EBDA Operations & Maintenance payments	1,614,002
Biosolids, year four of five with Synagro	929,000
OPEB Retiree Medical Trust payments (ADC)	908,022
Gas Media, 2-year contract with HydroChemPSC	378,500
Insurance (Property & Contents, Fleet, General Liability)	323,500
Musgraves Consulting LLC contract for Business Services	180,000
DGS natural gas service, PG&E billed through DGS	160,000
Grit screening and disposal, 1-year contract	110,000
Total Services	**$19,178,037**
Vehicle and Equipment Renewal/Replacement:	
12" portable pump	$130,000
Total Vehicles & Equipment	**$130,000**

UNION SANITARY DISTRICT 20-Year CIP
FISCAL YEARS 2020-2039 (Figures x $1,000)

Fund	%	Rank	Status	Project Name	FY20	FY21	FY22	FY23	FY24	FY25	FY26	FY27	FY28	FY29	10-Year Total	FY30	FY31	FY32	FY33	FY34	FY35	FY36	FY37	FY38	FY39	20-Year Total
ADMINISTRATIVE FACILITIES																										
800		3		Additional CS (Vehicle) Storage										250	250											250
800		1	Prog/Des	Campus Buildings (Admin, FMC, Ops)	500	10,400	42,100	19,400							72,400										72,400
800		1		Field Ops Bldg. Sesmic Upgrade and Leak Repairs						200		1,500	1,600		3,300										3,300
800		3		FMC Storage					300						300										300
800		3	Des/Constr	Plant Paving	200		250				300		200		950	200		200		200		200		200	1,950
800		2		Radio Repeater Antenna Replacement										150	150										150
800	50	3		Solar Panels/Inverters Replacement at Alvarado											0					150					150
900	50	3		Solar Panels/Inverters Replacement at Alvarado											0					150					150
800	50	2		Solar Panels/Inverters Replacement at Carport		50									50		300								350
900	50	2		Solar Panels/Inverters Replacement at Carport		50									50		300								350
800	50	2		Solar Panels/Inverters Replacement at Irvington			150								150			900							1,050
900	50	2		Solar Panels/Inverters Replacement at Irvington			150								150			900							1,050
Total for ADMINISTRATIVE FACILITIES					**700**	**10,500**	**42,650**	**19,400**	**300**	**200**	**300**	**1,500**	**1,800**	**400**	**77,750**	**200**	**600**	**2,000**	**0**	**500**	**0**	**200**	**0**	**200**	**0**	**81,450**
				Total Priority 1 Administrative Facilities	**500**	**10,400**	**42,100**	**19,400**	**0**	**200**	**0**	**1,500**	**1,600**	**0**	**75,700**	**0**	**0**	**0**	**0**	**0**	**0**	**0**	**0**	**0**	**75,700**
				Total Priority 2 Administrative Facilities	**0**	**100**	**300**	**0**	**0**	**0**	**0**	**0**	**0**	**150**	**550**	**0**	**600**	**1,800**	**0**	**0**	**0**	**0**	**0**	**0**	**2,950**
				Total Priority 3 Administrative Facilities	**200**	**0**	**250**	**0**	**300**	**0**	**300**	**0**	**200**	**250**	**1,500**	**200**	**0**	**200**	**0**	**500**	**0**	**200**	**0**	**200**	**2,800**
				Total Fund 800 - Administrative Facilities	**700**	**10,450**	**42,500**	**19,400**	**300**	**200**	**300**	**1,500**	**1,800**	**400**	**77,550**	**200**	**300**	**1,100**	**0**	**350**	**0**	**200**	**0**	**200**	**0**	**79,900**
				Total Fund 900 - Administrative Facilities	**0**	**50**	**150**	**0**	**0**	**0**	**0**	**0**	**0**	**0**	**200**	**0**	**300**	**900**	**0**	**150**	**0**	**0**	**0**	**0**	**1,550**

Fund	%	Rank	Status	Project Name	FY20	FY21	FY22	FY23	FY24	FY25	FY26	FY27	FY28	FY29	10-Year Total	FY30	FY31	FY32	FY33	FY34	FY35	FY36	FY37	FY38	FY39	20-Year Total
COLLECTION SYSTEM																										
800		2		Cast Iron/Pipe Lining		500		500		500		500		500	2,500		500		500		500		500			4,500
800		1	Design	Central Avenue Sanitary Sewer Relocation	50	1,000									1,050											1,050
800		2	Design	Gravity Sewer Rehab/Replacement	1,500		1,500		1,500		1,500		1,500		7,500	1,500		1,500		1,500		1,500		1,500		15,000
800		1		RCP Sewer Rehab (Alvarado Basin)						350	3,500				3,850											3,850
800		1		RCP Sewer Rehab (Irvington Basin)			300	3,000							3,300											3,300
800		1		RCP Sewer Rehab (Newark Basin)								350	3,500		3,850											3,850
900		3		Stevenson at Davis St.								200	1,500		1,700											1,700
Total for COLLECTION SYSTEM					**1,550**	**1,500**	**1,800**	**3,500**	**1,500**	**850**	**5,000**	**1,050**	**6,500**	**500**	**23,750**	**1,500**	**500**	**1,500**	**500**	**1,500**	**500**	**1,500**	**500**	**1,500**	**0**	**33,250**
				Total Priority 1 Collection System	**50**	**1,000**	**300**	**3,000**	**0**	**350**	**3,500**	**350**	**3,500**	**0**	**12,050**	**0**	**0**	**0**	**0**	**0**	**0**	**0**	**0**	**0**	**0**	**12,050**
				Total Priority 2 Collection System	**1,500**	**500**	**1,500**	**500**	**1,500**	**500**	**1,500**	**500**	**1,500**	**500**	**10,000**	**1,500**	**500**	**1,500**	**500**	**1,500**	**500**	**1,500**	**500**	**1,500**	**0**	**19,500**
				Total Priority 3 Collection System	**0**	**0**	**0**	**0**	**0**	**0**	**0**	**200**	**1,500**	**0**	**1,700**	**0**	**0**	**0**	**0**	**0**	**0**	**0**	**0**	**0**	**1,700**
				Total Fund 800 - Collection System	**1,550**	**1,500**	**1,800**	**3,500**	**1,500**	**850**	**5,000**	**850**	**5,000**	**500**	**22,050**	**1,500**	**500**	**1,500**	**500**	**1,500**	**500**	**1,500**	**500**	**1,500**	**0**	**31,550**
				Total Fund 900 - Collection System	**0**	**0**	**0**	**0**	**0**	**0**	**0**	**200**	**1,500**	**0**	**1,700**	**0**	**0**	**0**	**0**	**0**	**0**	**0**	**0**	**0**	**1,700**

Fund	%	Rank	Status	Project Name	FY20	FY21	FY22	FY23	FY24	FY25	FY26	FY27	FY28	FY29	10-Year Total	FY30	FY31	FY32	FY33	FY34	FY35	FY36	FY37	FY38	FY39	20-Year Total
TRANSPORT SYSTEM																										
800	50	2		Alameda Creek Crossing Lift Station										250	250		2,500	1,500								4,250
900	50	2		Alameda Creek Crossing Lift Station										250	250		2,500	1,500								4,250
800		2	Constr	Cathodic Protection Improvements - Transport	300		500			150			150		1,100		150			150			150			1,550
900		1	Design	Cherry St. PS	400	1,400	1,200								3,000											3,000
900		2		Equalization Storage @ Irvington								75	250	550	875											875
900		2		Equalization Storage @ Newark								1,500	4,600	10,800	16,900											16,900
800		1	Constr	Forcemain Corrosion Repairs - Phase 3	500	500									1,000											1,000
800		1		Forcemain Corrosion Repairs - Phase 4		550	500								1,050											1,050
800		3		Forcemain Rehabilitation											0		1,000	13,000	13,000	13,000	13,000					53,000

UNION SANITARY DISTRICT 20-Year CIP
FISCAL YEARS 2020-2039 (Figures x $1,000)

Fund	%	Rank	Status	Project Name	FY20	FY21	FY22	FY23	FY24	FY25	FY26	FY27	FY28	FY29	10-Year Total	FY30	FY31	FY32	FY33	FY34	FY35	FY36	FY37	FY38	FY39	20-Year Total
800		3		Hayward Marsh Decommissioning		100	1,000								1,100											1,100
800	50	2		Irvington PS Pumps and VFDs					425	2,050	900				3,375											3,375
900	50	2		Irvington PS Pumps and VFDs					425	2,050	900				3,375											3,375
800	50	2		Newark and Irvington PS Chemical System Impr	100	1,050	1,600								2,750											2,750
900	50	2		Newark and Irvington PS Chemical System Impr	100	1,050	1,600								2,750											2,750
800	50	2		Newark PS Pumps and VFDs								550	2,500	1,050	4,100											4,100
900	50	2		Newark PS Pumps and VFDs								550	2,500	1,050	4,100											4,100
800		3		Pump Station Asset Condition Assessment R&R				2,150		3,850	1,000	200			7,200	4,750				100	5,900		10,250			28,200
800		3		Transport System Misc. Projects		250	250	250	250	250	250	250	250	250	2,250	250	250	250	250	250	250	250	250	250	250	4,750
800	50	1	Planning	Wet Weather Flow Management	500	300									800											800
900	50	1	Planning	Wet Weather Flow Management	500	300									800											800
Total for TRANSPORT SYSTEM					**2,400**	**5,500**	**6,650**	**2,400**	**1,100**	**8,350**	**3,050**	**3,125**	**10,250**	**14,200**	**57,025**	**5,000**	**6,400**	**16,250**	**13,250**	**13,500**	**19,150**	**250**	**10,650**	**250**	**250**	**141,975**
				Total Priority 1 Transport System	**1,900**	**3,050**	**1,700**	**0**	**0**	**0**	**0**	**0**	**0**	**0**	**6,650**	**0**	**0**	**0**	**0**	**0**	**0**	**0**	**0**	**0**	**0**	**6,650**
				Total Priority 2 Transport System	**500**	**2,100**	**3,700**	**0**	**850**	**4,250**	**1,800**	**2,675**	**10,000**	**13,950**	**39,825**	**0**	**5,150**	**3,000**	**0**	**150**	**0**	**0**	**150**	**0**	**0**	**48,275**
				Total Priority 3 Transport System	**0**	**350**	**1,250**	**2,400**	**250**	**4,100**	**1,250**	**450**	**250**	**250**	**10,550**	**5,000**	**1,250**	**13,250**	**13,250**	**13,350**	**19,150**	**250**	**10,500**	**250**	**250**	**87,050**
				Total Fund 800 - Transport System	**1,400**	**2,750**	**3,850**	**2,400**	**675**	**6,300**	**2,150**	**1,000**	**2,900**	**1,550**	**24,975**	**5,000**	**3,900**	**14,750**	**13,250**	**13,500**	**19,150**	**250**	**10,650**	**250**	**250**	**105,925**
				Total Fund 900 - Transport System	**1,000**	**2,750**	**2,800**	**0**	**425**	**2,050**	**900**	**2,125**	**7,350**	**12,650**	**32,050**	**0**	**2,500**	**1,500**	**0**	**0**	**0**	**0**	**0**	**0**	**0**	**36,050**

Fund	%	Rank	Status	Project Name	FY20	FY21	FY22	FY23	FY24	FY25	FY26	FY27	FY28	FY29	10-Year Total	FY30	FY31	FY32	FY33	FY34	FY35	FY36	FY37	FY38	FY39	20-Year Total
TREATMENT PLANT																										
900		2	Des/Constr	Aeration Blower 11 and East Blower Bldg Improveme	400	1,900	2,000								4,300											4,300
800	50	2		Aeration Internal Lift Pumps			250	1,250							1,500											1,500
900	50	2		Aeration Internal Lift Pumps			250	1,250							1,500											1,500
800	50	2	Constr	Alvarado Influent PS Improvements-Phase 1	2,100	2,100									4,200											4,200
900	50	2	Constr	Alvarado Influent PS Improvements-Phase 1	2,100	2,100									4,200											4,200
800		2		Alvarado Influent PS Improvements-Phase 2				500	3,400						3,900											3,900
800		2	Des/Constr	Alvarado Influent Valve Box Gate Valves 1-2	100	700									800											800
800		2	Des/Constr	Cathodic Protection Improvements - Plant	75	900			500		150		150		1,775	150		150		150		150		150		2,525
800	50	2	Design	Centrifuge Building Improvements	200	1,900	1,200								3,300											3,300
900	50	2	Design	Centrifuge Building Improvements	200	1,900	1,200								3,300											3,300
800	50	2		Centrifuge Replacement			350	500	3,700	3,700					8,250											8,250
900	50	2		Centrifuge Replacement			350	500	3,700	3,700					8,250											8,250
800		2		Centrifuge System Equipment Replacement				600	2,400	2,400					5,400											5,400
800	50	1		Cogen Engine No. 1 60K Block Replacement						550					550				650							1,200
900	50	1		Cogen Engine No. 1 60K Block Replacement						550					550				650							1,200
800	50	1		Cogen Engine No. 2 60K Block Replacement			500								500	600								750		1,850
900	50	1		Cogen Engine No. 2 60K Block Replacement			500								500	600								750		1,850
800	50	2		Cogen Retrofit								100	1,000		1,100											1,100
900	50	2		Cogen Retrofit								100	1,000		1,100											1,100
800		2		Contact Tank Improvements	250										250											250
800		2		Control Box No. 1 Improvements								650	4,400	1,950	7,000											7,000
800		2		Degritter Building Roof (Seismic) Replacement											0	600	3,400	1,400								5,400
800	50	2		Degritting at Headworks and Improvements								950	5,400	2,300	8,650											8,650
900	50	2		Degritting at Headworks and Improvements								950	5,400	2,300	8,650											8,650

UNION SANITARY DISTRICT 20-Year CIP
FISCAL YEARS 2020-2039 (Figures x $1,000)

Fund	%	Rank	Status	Project Name	FY20	FY21	FY22	FY23	FY24	FY25	FY26	FY27	FY28	FY29	10-Year Total	FY30	FY31	FY32	FY33	FY34	FY35	FY36	FY37	FY38	FY39	20-Year Total
900		3		Digester Additional Capacity											**0**											**0**
800		3		Digester No. 1 Insp & Rehab		400	3,600								**4,000**						600	5,700				**10,300**
800		1	Des/Constr	Digester No. 2 Insp & Rehab	1,500	1,000									**2,500**				600	5,300						**8,400**
800		3		Digester No. 3 Insp & Rehab											**0**		450	4,150								**4,600**
800		3		Digester No. 4 Insp & Rehab						450	4,100				**4,550**											**4,550**
800		3		Digester No. 5 Insp & Rehab								450	4,300		**4,750**											**4,750**
800		3		Digester No. 6 Insp & Rehab				400	3,300						**3,700**										600	**4,300**
800		3		Digester No. 7 Insp & Rehab											**0**								550	5,200		**5,750**
900		1	Des/Constr	Digester No. 7	2,000	13,000	10,000								**25,000**											**25,000**
800		3		Diffuser Replacement											**0**				950	750						**1,700**
800	50	2	Des/Constr	Emergency Outfall Outlet Improvements	500	150									**650**											**650**
900	50	2	Des/Constr	Emergency Outfall Outlet Improvements	500	150									**650**											**650**
800		2		Flares Replacement			700	5,300							**6,000**											**6,000**
900		2		Flares Replacement											**0**											**0**
800		2		Headworks Gates											**0**	500	3,500									**4,000**
800	60	1	Constr	Headworks Screens Replacement	1,680	420									**2,100**											**2,100**
900	40	1	Constr	Headworks Screens Replacement	1,120	280									**1,400**											**1,400**
800		2		MCC Replacement			100	900					50	500	**1,550**											**1,550**
800	50	1	Design	MP - Aeration Basin Modifications	1,000	5,100	11,200	11,200	2,800						**31,300**											**31,300**
900	50	1	Design	MP - Aeration Basin Modifications	1,000	5,100	11,200	11,200	2,800						**31,300**											**31,300**
800	50	1		MP - Secondary Clarifiers		1,900	3,450		27,350	18,250					**50,950**											**50,950**
900	50	1		MP - Secondary Clarifiers		1,900	3,450		27,350	18,250					**50,950**											**50,950**
800		1		MP - Effluent Facilities		2,000	3,000		21,400	21,400					**47,800**											**47,800**
900		1		MP - Plant Equalization Storage					550	1,650	17,300				**19,500**											**19,500**
800	50	3		MP - Nutrient Removal (Level 2 Year-round)											**0**							2,600	10,750	34,000	45,400	**92,750**
900	50	3		MP - Nutrient Removal (Level 2 Year-round)											**0**							2,600	10,750	34,000	45,400	**92,750**
800		2		Odor Scrubber System Improvements						850	1,700	7,500	5,700	1,500	**17,250**	400	3,000	1,300	7,000	4,400	7,500	3,700	3,500	800	6,300	**55,150**
800		2		Plant 1 and 2 Water System Improvements			100	900							**1,000**											**1,000**
800		2		Plant 5kV Switchgear					700	2,800					**3,500**											**3,500**
900		2		Plant 5kV Switchgear											**0**											**0**
800		2		Plant 12kV Switchgear					700	3,500					**4,200**											**4,200**
900		2		Plant 12kV Switchgear											**0**											**0**
800	50	3		Plant Additional Power Source											**0**								250	2,000	2,750	**5,000**
900	50	3		Plant Additional Power Source											**0**								250	2,000	2,750	**5,000**
800		2		Plant Asset Condition Assessment R&R				100	150	2,000	500		1,000		**3,750**	200	300	4,500	1,150	2,650	400	200	0	400	0	**13,550**
800		2		Plant Asset Condition Assessment Projects			2,400			3,000				800	**6,200**	3,350	3,350	3,350								**16,250**
800	50	2		Plant Fiber Optic Network		50	150			75	500				**775**											**775**
900	50	2		Plant Fiber Optic Network		50	150			75	500				**775**											**775**
800		2	Des/Constr	Plant Grating Replacement	50										**50**											**50**
800		2		Plant Mechanical and Electrical Projects		500	500	500	500	500	500	500	500	500	**4,500**	500	500	500	500	500	500	500	500	500	500	**9,500**
800		2		PLC Replacement		250				300				350	**900**				400				450			**1,750**

UNION SANITARY DISTRICT 20-Year CIP
FISCAL YEARS 2020-2039 (Figures x $1,000)

Fund	%	Rank	Status	Project Name	FY20	FY21	FY22	FY23	FY24	FY25	FY26	FY27	FY28	FY29	10-Year Total	FY30	FY31	FY32	FY33	FY34	FY35	FY36	FY37	FY38	FY39	20-Year Total
800		1		Primary Clarifier (1 - 4) Sesmic Upgrade		400	2,900	1,300							4,600											4,600
900		1		Primary Clarifier (1 - 4) Sesmic Upgrade											0											0
800	75	2	Des/Constr	Primary Clarifier Rehab (5-6)	375					750	4,125	4,125	750		10,125											10,125
900	25	2	Des/Constr	Primary Clarifier Rehab (5-6)	125					250	1,375	1,375	250		3,375											3,375
800		3		Reclaimed Water											0											0
900		3		Reclaimed Water											0											0
800		3		Secondary Digester No. 1 Insp & Rehab				350	3,200						3,550						500	4,700				8,750
800		3		Secondary Digester No. 2 Insp & Rehab							400	3,400			3,800								550	5,000		9,350
800		2		Seismic Retrofit of Conc. Structures			200		300		300		300		1,100	300		300		300		300		300		2,600
800	50	2		Site Drainage Improvements				200	400	1,400	1,150				3,150											3,150
900	50	2		Site Drainage Improvements				200	400	1,400	1,150				3,150											3,150
800	50	2		Sludge Recirculation Pump Replacement		100	75								175			100								275
900	50	2		Sludge Recirculation Pump Replacement		100	75								175			100								275
800		1	Des/Constr	Standby Power Generation System Upgrade	1,500	12,500	10,000	4,000							28,000											28,000
900		3		Standby Power Generator No. 3											0							2,300	14,500	7,200		24,000
800		2		Switchboard 3 Replacement			100	800	350						1,250											1,250
900		2		Switchboard 3 Replacement											0											0
800		2		Switchboard 4 Replacement				150	1,000	500					1,650											1,650
900		2		Switchboard 4 Replacement											0											0
800		2		Thickeners 1 and 2 Rehabilitation					200	1,700	750				2,650											2,650
800		3		Thickeners 3 and 4 Rehabilitation											0					650	3,000					3,650
800		1	Design	WAS Thickeners	500	3,000	4,000	500							8,000											8,000
900		3		Waste Recycling and Alternative Energy											0	500	5,000									5,500
Total for TREATMENT PLANT					**17,275**	**59,850**	**73,950**	**42,600**	**107,150**	**90,000**	**34,500**	**20,100**	**30,200**	**10,200**	**485,825**	**7,700**	**19,500**	**15,850**	**11,900**	**14,700**	**12,500**	**22,750**	**42,050**	**93,050**	**103,700**	**829,525**
				Total Priority 1 Treatment Plant	**10,300**	**46,600**	**60,200**	**28,200**	**82,250**	**60,650**	**17,300**	**0**	**0**	**0**	**305,500**	**1,200**	**0**	**0**	**1,900**	**5,300**	**0**	**0**	**0**	**1,500**	**0**	**315,400**
				Total Priority 2 Treatment Plant	**6,975**	**12,850**	**10,150**	**13,650**	**18,400**	**28,900**	**12,700**	**16,250**	**25,900**	**10,200**	**155,975**	**6,000**	**14,050**	**11,700**	**9,050**	**8,000**	**8,400**	**4,850**	**4,450**	**2,150**	**6,800**	**231,425**
				Total Priority 3 Treatment Plant	**0**	**400**	**3,600**	**750**	**6,500**	**450**	**4,500**	**3,850**	**4,300**	**0**	**24,350**	**500**	**5,450**	**4,150**	**950**	**1,400**	**4,100**	**17,900**	**37,600**	**89,400**	**96,900**	**282,700**
				Total Fund 800 - Treatment Plant	**9,830**	**33,370**	**44,775**	**29,450**	**72,350**	**64,125**	**14,175**	**17,675**	**23,550**	**7,900**	**317,200**	**6,600**	**14,500**	**15,750**	**11,250**	**14,700**	**12,500**	**17,850**	**16,550**	**49,100**	**55,550**	**531,550**
				Total Fund 900 - Treatment Plant	**7,445**	**26,480**	**29,175**	**13,150**	**34,800**	**25,875**	**20,325**	**2,425**	**6,650**	**2,300**	**168,625**	**1,100**	**5,000**	**100**	**650**	**0**	**0**	**4,900**	**25,500**	**43,950**	**48,150**	**297,975**

Project Type	FY20	FY21	FY22	FY23	FY24	FY25	FY26	FY27	FY28	FY29	10-Year Total	FY30	FY31	FY32	FY33	FY34	FY35	FY36	FY37	FY38	FY39	20-Year Total
Administrative Facilities	700	10,500	42,650	19,400	300	200	300	1,500	1,800	400	77,750	200	600	2,000	0	500	0	200	0	200	0	81,450
Collection System	1,550	1,500	1,800	3,500	1,500	850	5,000	1,050	6,500	500	23,750	1,500	500	1,500	500	1,500	500	1,500	500	1,500	0	33,250
Transport System	2,400	5,500	6,650	2,400	1,100	8,350	3,050	3,125	10,250	14,200	57,025	5,000	6,400	16,250	13,250	13,500	19,150	250	10,650	250	250	141,975
Treatment Plant	17,275	59,850	73,950	42,600	107,150	90,000	34,500	20,100	30,200	10,200	485,825	7,700	19,500	15,850	11,900	14,700	12,500	22,750	42,050	93,050	103,700	829,525
GRAND TOTAL	**21,925**	**77,350**	**125,050**	**67,900**	**110,050**	**99,400**	**42,850**	**25,775**	**48,750**	**25,300**	**644,350**	**14,400**	**27,000**	**35,600**	**25,650**	**30,200**	**32,150**	**24,700**	**53,200**	**95,000**	**103,950**	**1,086,200**
R&R (Fund 800) Total	13,480	48,070	92,925	54,750	74,825	71,475	21,625	21,025	33,250	10,350	441,775	13,300	19,200	33,100	25,000	30,050	32,150	19,800	27,700	51,050	55,800	748,925
Capacity (Fund 900) Total	8,445	29,280	32,125	13,150	35,225	27,925	21,225	4,750	15,500	14,950	202,575	1,100	7,800	2,500	650	150	0	4,900	25,500	43,950	48,150	337,275
Priority 1																						
Administrative Facilities	500	10,400	42,100	19,400	0	200	0	1,500	1,600	0	75,700	0	0	0	0	0	0	0	0	0	0	75,700
Collection System	50	1,000	300	3,000	0	350	3,500	350	3,500	0	12,050	0	0	0	0	0	0	0	0	0	0	12,050
Transport System	1,900	3,050	1,700	0	0	0	0	0	0	0	6,650	0	0	0	0	0	0	0	0	0	0	6,650
Treatment Plant	10,300	46,600	60,200	28,200	82,250	60,650	17,300	0	0	0	305,500	1,200	0	0	1,900	5,300	0	0	0	1,500	0	315,400
Total Priority 1 Projects	**12,750**	**61,050**	**104,300**	**50,600**	**82,250**	**61,200**	**20,800**	**1,850**	**5,100**	**0**	**399,900**	**1,200**	**0**	**0**	**1,900**	**5,300**	**0**	**0**	**0**	**1,500**	**0**	**409,800**
Priority 2																						
Administrative Facilities	0	100	300	0	0	0	0	0	0	150	550	0	600	1,800	0	0	0	0	0	0	0	2,950
Collection System	1,500	500	1,500	500	1,500	500	1,500	500	1,500	500	10,000	1,500	500	1,500	500	1,500	500	1,500	500	1,500	0	19,500
Transport System	500	2,100	3,700	0	850	4,250	1,800	2,675	10,000	13,950	39,825	0	5,150	3,000	0	150	0	0	150	0	0	48,275
Treatment Plant	6,975	12,850	10,150	13,650	18,400	28,900	12,700	16,250	25,900	10,200	155,975	6,000	14,050	11,700	9,050	8,000	8,400	4,850	4,450	2,150	6,800	231,425
Total Priority 2 Projects	**8,975**	**15,550**	**15,650**	**14,150**	**20,750**	**33,650**	**16,000**	**19,425**	**37,400**	**24,800**	**206,350**	**7,500**	**20,300**	**18,000**	**9,550**	**9,650**	**8,900**	**6,350**	**5,100**	**3,650**	**6,800**	**302,150**
Priority 3																						
Administrative Facilities	200	0	250	0	300	0	300	0	200	250	1,500	200	0	200	0	500	0	200	0	200	0	2,800
Collection System	0	0	0	0	0	0	0	200	1,500	0	1,700	0	0	0	0	0	0	0	0	0	0	1,700
Transport System	0	350	1,250	2,400	250	4,100	1,250	450	250	250	10,550	5,000	1,250	13,250	13,250	13,350	19,150	250	10,500	250	250	87,050
Treatment Plant	0	400	3,600	750	6,500	450	4,500	3,850	4,300	0	24,350	500	5,450	4,150	950	1,400	4,100	17,900	37,600	89,400	96,900	282,700
Total Priority 3 Projects	**200**	**750**	**5,100**	**3,150**	**7,050**	**4,550**	**6,050**	**4,500**	**6,250**	**500**	**38,100**	**5,700**	**6,700**	**17,600**	**14,200**	**15,250**	**23,250**	**18,350**	**48,100**	**89,850**	**97,150**	**374,250**

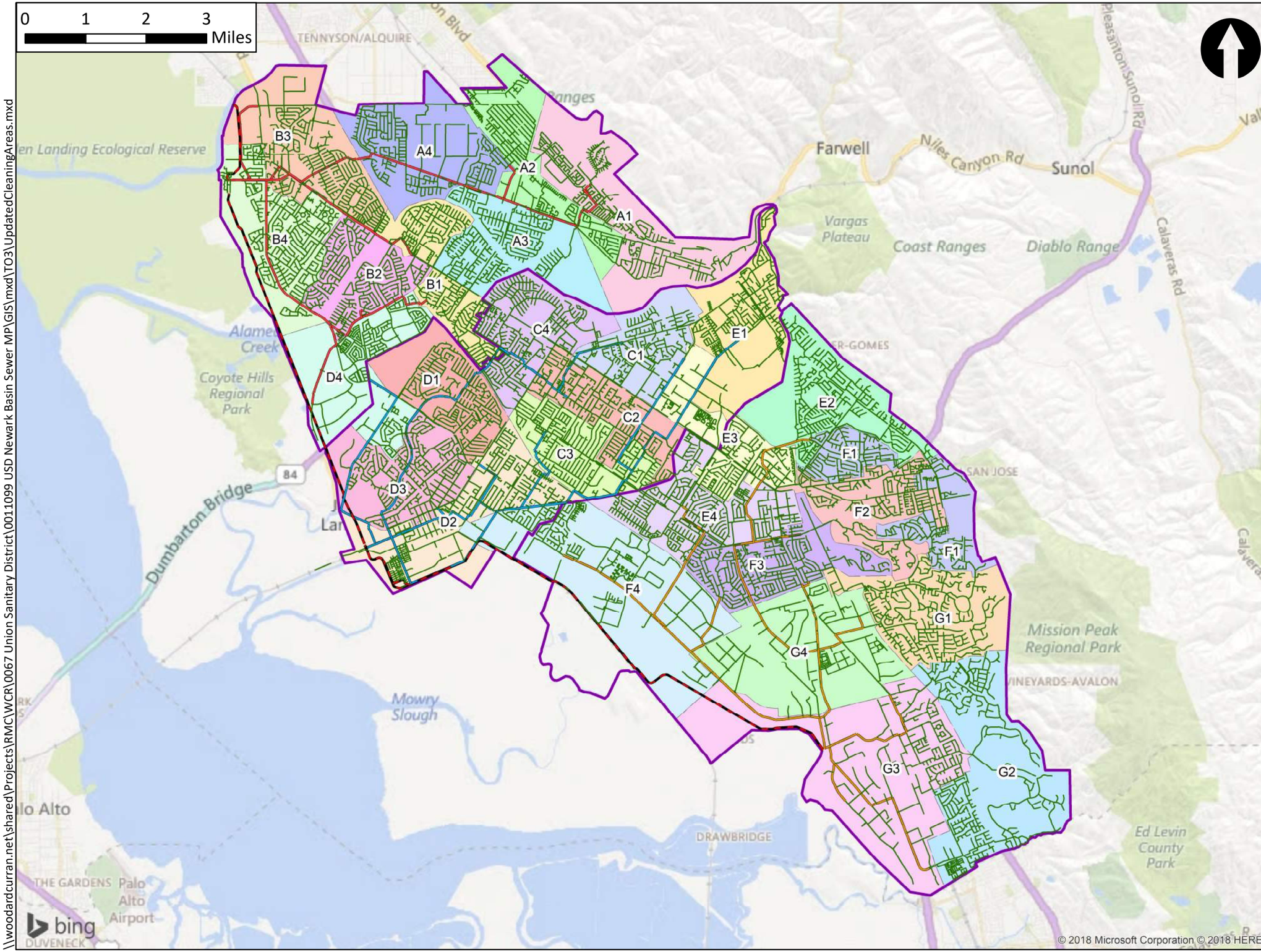

Legend

- Gravity Sewer
- Force Main & EBDA Outfall
- Alvarado Trunk Sewer
- Newark Trunk Sewer
- Irvington Trunk Sewer
- Drainage Basins
- A1 Hansen Sub-Section

Union Sanitary District

Updated Sewer Cleaning Areas

UNION SANITARY DISTRICT

WOODARD & CURRAN

Sources: ALCO Streets, ALCO Freeways, USD

\\woodardcurran.net\shared\Projects\RMC\WCR\0067 Union Sanitary District\00110 USD Newark Basin Sewer MP\GIS\mxd\TO3\UpdatedCleaningAreas.mxd

Collection Services Division
Preventative Maintenance Program

Collection Services Group has developed four unique PMP programs to meet all the maintenance needs of the District's gravity wastewater collection system. Each PMP program is unique or has its own schedule not duplicated in other schedules.

The four schedules are:

Annual PMP

Annual cleaning and inspection of all pipe except plastic pipe in one of the seven maintenance sections within an 84-month schedule. Television inspection of only plastic pipe (in whole residential and commercial developments where only plastic pipe is installed) will occur every other cycle in one of the seven maintenance sections. Plastic pipe will be addressed if it is damaged, cross-bored and have capacity issues.

Root Control PMP

Root control maintenance programs with a schedule of saw cut cleaning and chemical treatment once every 36 months in the maintenance sections and with a television inspection schedule for the section matching the date of the annual PMP for 84 months.

Selective Cleaning PMP

Selective cleaning maintenance program for problem lines needing more frequent cleaning with a cleaning frequency of 3 months, 6 months, 12 months, 24 months or 36 months and a television schedule for the section matching the fiscal year dates of the annual PMP for 84 months.

Corrosion Control PMP

Selective sewer lines have been identified to be treated with the dosing of caustic soda to control the generation of hydrogen sulfide. Controlling H2S significantly reduces corrosion to RCP sewer lines and provides downstream benefit requiring less chemicals for odor control.

Collection Services Work Group
Annual/Quarterly Cleaning and Television Inspection Schedule Dates

84 Mo Cycle 1	Section A 18/19		Section B 19/20		Section C 20/21		Section D 21/22		Section E 22/23		Section F 23/24		Section G 24/25	
	Sub-Section	Clean & Televise	Sub-Section	Clean_ ALL & CCTV_VCP	Sub-Section	Clean_ ALL & CCTV_VCP	Sub-Section	Clean_ ALL & CCTV_VCP	Sub-Section	Clean_ ALL & CCTV_VCP	Sub-Section	Clean_ ALL & CCTV_VCP	Sub-Section	Clean_ ALL & CCTV_VCP
	A-1	7/1/18	B-1	7/1/19	C-1	7/1/20	D-1	7/1/21	E-1	7/1/22	F-1	7/1/23	G-1	7/1/24
	A-2	10/1/18	B-2	10/1/19	C-2	10/1/20	D-2	10/1/21	E-2	10/1/22	F-2	10/1/23	G-2	10/1/24
	A-3	1/1/19	B-3	1/1/20	C-3	1/1/21	D-3	1/1/22	E-3	1/1/23	F-3	1/1/24	G-3	1/1/25
	A-4	4/1/19	B-4	4/1/20	C-4	4/1/21	D-4	4/1/22	E-4	4/1/23	F-4	4/1/24	G-4	4/1/25
84 Mo Cycle 2	**Section A 25/26**		**Section B 26/27**		**Section C 27/28**		**Section D 28/29**		**Section E 29/30**		**Section F 30/31**		**Section G 31/32**	
	Sub-Section	Clean_ ALL & CCTV_VCP	Sub-Section	Clean_ ALL & CCTV_ALL	Sub-Section	Clean_ ALL & CCTV_ALL	Sub-Section	Clean_ ALL & CCTV_ALL	Sub-Section	Clean_ ALL & CCTV_ALL	Sub-Section	Clean_ ALL & CCTV_ALL	Sub-Section	Clean_ ALL & CCTV_ALL
	A-1	7/1/25	B-1	7/1/26	C-1	7/1/27	D-1	7/1/28	E-1	7/1/29	F-1	7/1/30	G-1	7/1/31
	A-2	10/1/25	B-2	10/1/26	C-2	10/1/27	D-2	10/1/28	E-2	10/1/29	F-2	10/1/30	G-2	10/1/31
	A-3	1/1/26	B-3	1/1/27	C-3	1/1/28	D-3	1/1/29	E-3	1/1/30	F-3	1/1/31	G-3	1/1/32
	A-4	4/1/26	B-4	4/1/27	C-4	4/1/28	D-4	4/1/29	E-4	4/1/30	F-4	4/1/31	G-4	4/1/32
84 Mo Cycle 3	**Section A 32/33**		**Section B 33/34**		**Section C 34/35**		**Section D 35/36**		**Section E 36/37**		**Section F 37/38**		**Section G 38/39**	
	Sub-Section	Clean_ ALL & CCTV_VCP	Sub-Section	Clean_ ALL & CCTV_VCP	Sub-Section	Clean_ ALL & CCTV_VCP	Sub-Section	Clean_ ALL & CCTV_VCP	Sub-Section	Clean_ ALL & CCTV_VCP	Sub-Section	Clean_ ALL & CCTV_VCP	Sub-Section	Clean_ ALL & CCTV_VCP
	A-1	7/1/32	B-1	7/1/33	C-1	7/1/34	D-1	7/1/35	E-1	7/1/36	F-1	7/1/37	G-1	7/1/38
	A-2	10/1/32	B-2	10/1/33	C-2	10/1/34	D-2	10/1/35	E-2	10/1/36	F-2	10/1/37	G-2	10/1/38
	A-3	1/1/33	B-3	1/1/34	C-3	1/1/35	D-3	1/1/36	E-3	1/1/37	F-3	1/1/38	G-3	1/1/39
	A-4	4/1/33	B-4	4/1/34	C-4	4/1/35	D-4	4/1/36	E-4	4/1/37	F-4	4/1/38	G-4	4/1/39

A1A_**ALL** = Asset Grouping to be used for Cleaning (7year cycle) and Televising (14year cycle) all pipe types

A1A_**VCP** = Asset Grouping for CCTV of Small sections of PVC pipe and all pipe of VCP, Cast Iron, etc. This group is for sewer mains that we want to CCTV every 7 years.

Revised: 9/4/2019 - JR

Collection Services Work Group
84 Month Trunk Line Cleaning and Television Inspection Schedule Dates

84 Mo Cycle 1	Alvarado Basin 2022	Newark Basin 2024	Irvington Basin 2026
	Clean & Televise	Clean & Televise	Clean & Televise
	6/1/2022	6/1/2024	6/1/2026
84 Mo Cycle 2	**Alvarado Basin 2022**	**Newark Basin 2024**	**Irvington Basin 2026**
	Clean & Televise	Clean & Televise	Clean & Televise
	6/1/2029	6/1/31	6/1/2033
84 Mo Cycle 3	**Alvarado Basin 2022**	**Newark Basin 2024**	**Irvington Basin 2026**
	Clean & Televise	Clean & Televise	Clean & Televise
	6/1/2036	6/1/2038	6/1/2040

Revised: 9/4/2019 - JR

Collection Services Division
Easement Maintenance Procedures

All easements are scheduled annually for maintenance. All easement maintenance is scheduled on April 1st.Crews will begin in the area of the upcoming 84 Mo PM Cleaning and Televising which is scheduled for July 1st. Example: Section "B" is scheduled to start July of '18 – June of '19 annual cleaning. Easement maintenance will begin in April of '18

Activities to be included in the annual Easement Maintenance are:

- Locate manhole
- List addresses
- Paint curb with USD logo
- Adjust manhole to grade
- Install USD marker post
- Install bolt-down manhole cover
- Roadway access maintenance
- Weed abatement

In addition, addresses will be listed in the "notes" section on each scheduled work order.

Revised: October 2019

Corrosion Control Program
DOSING SCHEDULE
July, 2019 to June, 2020
USD Contact 510-701-2912
USD Planner/Scheduler Matt Lubina 510-477-7548

Irvington Basin, Reach 4 and Reach 5 Only

Dosing—

Thurs	7/25/19	9:00 a.m.	Reach 5	Cherry Street R14034	Dose	200 gal.	X	X
		10:00 a.m.	Reach 4	So. Grimmer Blvd. L20009	Dose	400 gal.	X	X

Newark Basin, Reach 1 and Reach 2 Only

Dosing—

Thurs.	7/25/19	9:00 a.m.	Reach 1	Lake Blvd. Z11009	Dose	100 gal.	X	X
		10:00 a.m.	Reach 2	Peralta Blvd. X15005	Dose	200 gal.	X	X

Newark Basin Reach 3 Only

Dosing—

Thurs.	8/1/19	9:00 a.m.	Reach 3	Argonaut Way V17012	Dose	300 gal.	X	X

Irvington Basin, Reach 4 and Reach 5 Only

Dosing—

Thurs	8/29/19	9:00 a.m.	Reach 5	Cherry Street R14034	Dose	200 gal.	X	X
		10:00 a.m.	Reach 4	So. Grimmer Blvd. L20009	Dose	400 gal.	X	X

Newark Basin, Reach 1 and Reach 2 Only

Dosing—

Thurs.	9/5/19	9:00 a.m.	Reach 1	Lake Blvd. Z11009	Dose	100 gal.	X	X

		10:00 a.m.	Reach 2	Peralta Blvd. X15005	Dose	200 gal.	X	X

Newark Basin Reach 3 Only

Dosing—

Thurs.	9/12/19	9:00 a.m.	Reach 3	Argonaut Way V17012	Dose	300 gal.	X	X

Irvington Basin, Reach 4 and Reach 5 Only

Dosing—

Thurs.	10/10/19	9:00 a.m.	Reach 5	Cherry Street R14034	Dose	200 gal.	X	X
		10:00 a.m.	Reach 4	So. Grimmer Blvd. L20009	Dose	400 gal.	X	X

Newark Basin, Reach 1 and Reach 2 Only

Dosing—

Thurs.	10/17/19	9:00 a.m.	Reach 1	Lake Blvd. Z11009	Dose	100 gal.	X	X
		10:00 a.m.	Reach 2	Peralta Blvd. X15005	Dose	200 gal.	X	X

Newark Basin Reach 3 Only

Dosing—

Thurs.	10/24/19	9:00 a.m.	Reach 3	Argonaut Way V17012	Dose	300 gal.	X	X

Irvington Basin, Reach 4 and Reach 5 Only

Dosing—

Thurs.	11/21/19	9:00 a.m.	Reach 5	Cherry Street R14034	Dose	200 gal.	X	X
		10:00 a.m.	Reach 4	So. Grimmer Blvd. L20009	Dose	400 gal.	X	X

Corrosion Control Program
DOSING SCHEDULE
July, 2019 to June, 2020
USD Contact 510-701-2912
USD Planner/Scheduler Matt Lubina 510-477-7548

Newark Basin, Reach 1 and Reach 2 Only

Dosing—

Thurs.	12/5/19	9:00 a.m.	Reach 1	Lake Blvd. Z11009	Dose	100 gal.	X	X
		10:00 a.m.	Reach 2	Peralta Blvd. X15005	Dose	200 gal.	X	X

Newark Basin Reach 3 Only

Dosing—

Thurs.	12/5/19	9:00 a.m.	Reach 3	Argonaut Way V17012	Dose	300 gal.	X	X

Irvington Basin, Reach 4 and Reach 5 Only

Dosing—

Thurs.	1/2/20	9:00 a.m.	Reach 5	Cherry Street R14034	Dose	200 gal.	X	X
		10:00 a.m.	Reach 4	So. Grimmer Blvd. L20009	Dose	400 gal.	X	X

Newark Basin, Reach 1 and Reach 2 Only

Dosing—

Thurs.	1/9/20	9:00 a.m.	Reach 1	Lake Blvd. Z11009	Dose	100 gal.	X	X
		10:00 a.m.	Reach 2	Peralta Blvd. X15005	Dose	200 gal.	X	X

Newark Basin Reach 3 Only

Dosing—

Thurs.	1/16/20	9:00 a.m.	Reach 3	Argonaut Way V17012	Dose	300 gal.	X	X

Corrosion Control Program
DOSING SCHEDULE
July, 2019 to June, 2020
USD Contact 510-701-2912
USD Planner/Scheduler Matt Lubina 510-477-7548

Irvington Basin, Reach 4 and Reach 5 Only

Dosing—

Thurs.	2/13/20	9:00 a.m.	Reach 5	Cherry Street R14034	Dose	200 gal.	X	X
		10:00 a.m.	Reach 4	So. Grimmer Blvd. L20009	Dose	400 gal.	X	X

Newark Basin, Reach 1 and Reach 2 Only

Dosing—

Thurs.	2/20/20	9:00 a.m.	Reach 1	Lake Blvd. Z11009	Dose	100 gal.	X	X
		10:00 a.m.	Reach 2	Peralta Blvd. X15005	Dose	200 gal.	X	X

Newark Basin Reach 3 Only

Dosing—

Thurs.	2/27/20	9:00 a.m.	Reach 3	Argonaut Way V17012	Dose	300 gal.	X	X

Irvington Basin, Reach 4 and Reach 5 Only

Dosing—

Thurs.	3/26/20	9:00 a.m.	Reach 5	Cherry Street R14034	Dose	200 gal.	X	X
		10:00 a.m.	Reach 4	So. Grimmer Blvd. L20009	Dose	400 gal.	X	X

Newark Basin, Reach 1 and Reach 2 Only

Dosing—

Thurs.	4/2/20	9:00 a.m.	Reach 1	Lake Blvd. Z11009	Dose	100 gal.	X	X
		10:00 a.m.	Reach 2	Peralta Blvd. X15005	Dose	200 gal.	X	X

Newark Basin Reach 3 Only

Dosing—

Thurs.	4/9/20	9:00 a.m.	Reach 3	Argonaut Way V17012	Dose	300 gal.	X	X

Irvington Basin, Reach 4 and Reach 5 Only

Dosing—

Thurs.	5/21/20	9:00 a.m.	Reach 5	Cherry Street R14034	Dose	200 gal.	X	X
		10:00 a.m.	Reach 4	So. Grimmer Blvd. L20009	Dose	400 gal.	X	X

Newark Basin, Reach 1 and Reach 2 Only

Dosing—

Thurs.	5/28/20	9:00 a.m.	Reach 1	Lake Blvd. Z11009	Dose	100 gal.	X	X
		10:00 a.m.	Reach 2	Peralta Blvd. X15005	Dose	200 gal.	X	X

Newark Basin Reach 3 Only

Dosing—

Thurs.	6/4/20	9:00 a.m.	Reach 3	Argonaut Way V17012	Dose	300 gal.	X	X

Collection Services Root Control Maintenance Program

Root Control Maintenance Program identifies root growth in sewer mains by CCTV inspection. Lines found to have significant root growth will be placed in a PM root control program or will be repaired or replaced.

Lines on the root control schedule will be cleaned and chemically treated every 36 months and televised every 84 months during the fiscal year cleaning of the sections.

The root control maintenance program is designed to provide for the maintenance needs of these line. The cleaning, televising and chemical treatment of sewer mains are components of the root control maintenance program.

QA/QC – A percentage of lines scheduled for root control are identified each year. These lines are inspected prior to cleaning and the condition is assessed for possible removal from the program.

Collection Services
Root Control Maintenance Program
FY 2017 Thru FY2026

	Sections A, D, G		Sections B, E		Sections C, F	
Cycle 1	**2017/2018**		**2018/2019**		**2019/2020**	
Cut	10/1/17	10/1/17	10/1/18	10/1/18	10/1/19	10/1/19
Chemical Treat	4/1/18	4/1/18	4/1/19	4/1/19	4/1/20	4/1/20
Cycle 2	**2020/2021**		**2021/2022**		**2022/2023**	
Cut	10/1/20	10/1/20	10/1/21	10/1/21	10/1/22	10/1/22
Chemical Treat	4/1/21	4/1/21	4/1/22	4/1/22	4/1/23	4/1/23
Cycle 3	**2023/2024**		**2024/2025**		**2025/2026**	
Cut	10/1/23	10/1/23	10/1/24	10/1/24	10/1/25	10/1/25
Chemical Treat	4/1/24	4/1/24	4/1/25	4/1/25	4/1/26	4/1/26

Cut - Cleaning using Root Saw method
Chemical Treat - Chemically treat using foam method

Updated: October 2019

Collection Services
Selective Cleaning Maintenance Program

Selective Cleaning Maintenance Program identifies sewer mains with (hot spots) sags, surcharges, grease deposits, debris, siphons, capacity and velocity problems as well as other maintenance problems. These lines are prone to develop surcharges, stoppages, and overflows.

Lines on the selective cleaning schedule will be cleaned on a 1, 3, 6, 12, 24 or 36 month schedule depending on the severity of the problem. These lines will also be inspected every 84 months during the fiscal year cleaning of sections.

The selective cleaning program is designed to provide needed maintenance to these lines and to monitor the possibility of stoppages.

The selective cleaning program establishes scheduling dates for all lines at 3-month intervals: September 1, December 1, March1, and June 1.

QA/QC – A percentage of lines scheduled for selective cleaning are identified each year. These lines are inspected prior to cleaning and the condition is assessed for schedule accuracy. Schedules are adjusted based on findings to optimize scheduled cleaning frequency.

Collection Services
Selective Cleaning Maintenance Program
Schedule Dates

Frequency (monthly)	All Sections
3, 6, 12, 24, 36 Months	9/1
	12/1
	3/1
	6/1

Created: October 2019

FY20 Training Plan By Quarter

9/19/2019

Qtr		Course	Mandate	Frequency	Hrs	Month	Who Attends	Notes
1st	Jul - Aug - Sep	Industrial & Office Ergonomics	CAL-OSHA 5110	A	1	9/10 and 9/12	All	Vendor: Backfit (Dr P)
		USD PR: #6510- Alternative Staffing	District	A	0.5	July	All	
		USD PR#5050- Driver Insurability	District	A	0.5	September	All	
		Emergency Preparedness: Great Shakeout Drill	District	A	0.5	10/17 @ 10:17	All	
		Emergency Preparedness: NIMS/SEMS Overview Training	District/CAL OES	5Y	2	9/23 and 9/24	New Hires /EE's that are overdue	21 EE's- Email sent
Qtr		Course	Mandate	Frequency	Hrs	Month	Who Attends	Notes
2nd	Oct - Nov - Dec	Construction/ Traffic Flagging	CAL-OSHA 1598	3Y	3	October (10/2)	CS: MTV/Cons, TS: EC	23 EE's- Email sent
		Hazmat Handler/SPCC	CAL EPA/Title 22	A	1	Nov/Dec	TPO, RS, CS, FMC	Contract: Kirsten Bradford, AECOM
		Excavation	Cal- OSHA 1541	3Y	TBD	November	TS:CS, TS:CIP, CS	20 EE's
		NFPA 70E- General Electrical Safety		3Y	2	November	FMC:Mech/IT, TS:CIP, TD:TPO	43 EE's
		NFPA 70E- ITE specific		3Y	8	November	FMC: Elec	4 EE's- External?
		Excel or PD Class- Optional						
		USD PR# TBD	District	A	0.5	November	All	
		Coach Training-TBD	District	QTR	8			
		Emergency Preparedness: EOC and Section Training	District	3 Y	1	TBD	All	
Qtr		Course	Mandate	Frequency	Hrs	Month	Who Attends	Notes
3rd	Jan - Feb -Mar	Confined Space Rescue Training (Practical)	CAL- OSHA 5157	A	1	February	TPO, CS, FMC, CIP, CST	Internal, policy delivered by Coaches, EHSPM, SME, or designee
		Hearing/Respiratory (FIT)Testing	CAL- OSHA 5099/5144	A	1	March	TPO, CS, FMC	Organized by Mike/Nina
		Preventing Sexual Harrassement	SB1343	2Y	1	TBD	All	124 EE's
		Preventing Sexual Harrassement- Coaches/Managers	SB1343	2Y	2	TBD	Coaches, Managers	17 EE's
		USD PR: #TBD	District	A	0.5	January	All	
		USD PR:# TBD	District	A	0.5	March	All	
		Coach Training-TBD	District	QTR	8			
		Emergency Preparedness: TBD	District	A				
Qtr		Course	Mandate	Frequency	Hrs	Month	Who Attends	Notes
4th	Apr - May - Jun	Defensive Driving	District	A	1	April	All	CHP
		Heat Stress	CAL- OSHA 3395	A	0.5	April	TPO, CS, FMC, TS	Delivered as policy review/discussion by Coaches, EHSPM, Designee, TERPM
		USD Customer Service	District	5Y	1	May/June	All	Internal
		Chemical Hygiene Plan	CAL- OSHA 5191	A	1	June	RS	Team review USD Chemical Hygiene Plan
		Excel or PD Class- Optional						
		USD PR: #TBD	District	Scheduled	0.5	TBD	All	
		Coach Training-TBD	District	QTR	8			
		Emergency Preparedness: TBD	District	A				

District Wide Training
Leadership School
Incidentals

Sewer System
Management Plan (SSMP)

Contingency Equipment & Replacement Inventories

- **All pump stations have redundant pumps. The loss of one pump doesn't affect our ability to transport wastewater.**

- **Six of the seven stations have emergency standby generators. Flow to the smallest lift station will divert to another section of the gravity system when flow backs up. (Standby generator is not needed.)**

- **Longer lead time parts (impellers, wear rings & mechanical seals) are stocked.**

- **Stations are monitored by SCADA and remote operation can be instituted to certain equipment and system.**

- **Twin Force Mains are in place on large pump stations.**

- **Materials and Equipment are on site at our Corporation Yard to make emergency repair on sewer mains.**

- **Pumps, hoses, temporary piping and various parts are on site at our Corporation Yard to by-pass failed sewers until repairs are completed.**

Sewer System
Management Plan (SSMP)

USD Vehicle & Equipment Renewal & Replacement Process

Using the District's CCMS, each asset is assigned a score based on its maintenance history. Each of the following criteria is assigned a numeric value:

- **Service Type**
- **Maintenance Costs compared to Original Purchase Price**
- **Maintenance Costs**
- **Major Failures**
- **Age of Asset**
- **Mileage**
- **General Condition**

Along with the score based on these criteria, redundancy, criticality and maintenance staff input is used to determine the useful lifespan of the asset

Vehicle-Equipment Renewal-Replacement - FY2020

Annual Contract Purchases of Supplies, Services, and Vehicle and Equipment Renewal /Replacement Over $100,000 for Fiscal Year 2020	
Supplies:	***Estimated Expenditure***
Sodium Hypochlorite, 1-year contract with successful bidder	$686,000
Ferrous Chloride, 1-year contract with successful bidder	547,000
Hydrogen Peroxide, 1-year contract with Evoqua	487,000
Polymer, emulsion, 2-year contract with 3 optional 1-year renewals	454,000
Polymer, mannich, 2-year contract with 3 optional 1-year renewals	106,000
Total Supplies	**$2,280,000**
Services:	
CalPERS Retirement contribution payments for employees	$5,412,301
State Water Resources Control Board - Debt payments for nine SRF loans	3,902,080
CalPERS Medical - payments for employee coverage	3,515,632
PG&E - Alvarado site ($1,500,000) and Newark P.S. ($245,000)	1,745,000
EBDA Operations & Maintenance payments	1,614,002
Biosolids, year four of five with Synagro	929,000
OPEB Retiree Medical Trust payments (ADC)	908,022
Gas Media, 2-year contract with HydroChemPSC	378,500
Insurance (Property & Contents, Fleet, General Liability)	323,500
Musgraves Consulting LLC contract for Business Services	180,000
DGS natural gas service, PG&E billed through DGS	160,000
Grit screening and disposal, 1-year contract	110,000
Total Services	**$19,178,037**
Vehicle and Equipment Renewal/Replacement:	
12" portable pump	$130,000
Total Vehicles & Equipment	**$130,000**

Renewal-Replacement Eq-Veh Plant-Pump Stn– FY2020

SPECIAL PROJECT EXPENDITURES					
DESCRIPTION	Adopted Budget FY19	Estimated Actual FY19	Estimated Carryover	New $ (Provision)	Adopted Budget FY20
Administrative & Regulatory					
Anticipated Biosolids Coalition Membership Dues	$25,000	$0	$25,000	$0	$25,000
Anticipated Election Costs (Fremont, Newark & Union City; 164,200 registered voters)	0	0	0	820,600	820,600
GIS JPA	27,000	27,000	0	27,000	27,000
IBB Labor Negotiations Facilitation	20,000	305	0	0	0
Public Outreach Programs	100,000	81,000	19,000	131,000	150,000
Public Information Program	90,000	51,000	39,000	36,000	75,000
Property Acquisition	0	0	0	1,500,000	1,500,000
Recruitment	0	0	0	30,000	30,000
Sub-Total Administrative & Regulatory	***$262,000***	***$159,305***	***$83,000***	***$2,544,600***	***$2,627,600***
Studies & Other					
Air Permitting Consultant Assistance	50,000	0	0	0	0
Alvarado Sub-Surface Investigation (Plant Groundwater Monitoring)	10,000	5,933	4,067	3,933	8,000
Financial Master Plan	25,000	10,000	15,000	10,000	25,000
Forcemain Condition Assessment	10,000	4,094	5,906	24,094	30,000
IT Master Plan	200,000	86,000	114,000	0	114,000
Lateral Pilot Program - Condition Assessment	25,000	14,775	0	0	0
Local Limits Study	10,000	0	0	0	0
MBR Pilot Program	100,000	0	0	0	0
Newark Basin Master Plan/PACP Update	225,000	255,751	0	30,000	30,000
Odor Control Alternatives Studies	100,000	171,637	0	50,000	50,000
Plant Asset Condition Assessment Update	50,000	23,689	0	0	0
Plant Master Plan	100,000	100,000	0	75,000	75,000
Plant Solids System/Capacity Assessment	0	8,821	0	0	0
Seismic Evaluation	8,000	0	0	0	0
Treatment Plant IT Network Master Plan	135,000	0	130,000	0	130,000
Water Reclamation Pilot Program (Fill Station)	100,000	0	0	0	0
ACWD/SFPUC Joint Reclaimed Water Study	0	0	0	95,000	95,000
Capacity Fee Study	0	0	0	50,000	50,000
CIP Front End Specs Update	0	0	0	100,000	100,000
Cogen Options Evaluation	0	0	0	150,000	150,000
Cost of Service Analysis (COSA)	0	0	0	85,000	85,000
Forcemain Geotech Investigation at Alameda Creek	0	0	0	100,000	100,000
Irvington Basin MP Update	0	0	0	60,000	60,000
Odor Control Pilot Study	0	0	0	250,000	250,000
Old Alameda Creek Report of Waste Discharge (ROWD)	0	0	0	300,000	300,000
Pump Stations Odor Control Study	0	0	0	75,000	75,000
Sub-Total Studies & Other	***1,148,000***	***680,700***	***268,973***	***1,458,027***	***1,727,000***
Total Special Projects	**$1,410,000**	**$840,005**	**$351,973**	**$4,002,627**	**$4,354,600**

Emergency Bypass Inventory

12” HDPE PIPE & FITTINGS

SIZE	STICK LENGTH	TOTAL LENGTH
12”	20’	1140’
12”	10’	50’
12”	6’	30’

*All pipe has Bauer fittings

12” Fittings:

3	12”	HDPE long sweep 90˚ with male/female Bauer fittings
1	12”	HDPE long sweep 45˚ with male/female Bauer fittings
4	12”	90˚ bend Bauer fitting male/female
4	12”	45˚ bend Bauer fitting male/female
4	12”	Bauer female x flange adapter
2	12”	Bauer male x flange adapter
3	12”	Bauer male x 6” female threaded reducer
2		ARV’s for HDPE pipe (4” connection)
1		12”x 24”x 4” steel Tee with male/female Bauer fittings

6” ALUMINUM PIPE & FITTINGS

SIZE	STICK LENGTH	TOTAL LENGTH
6”	20’	960’
6”	10’	20’
6”	5’	10’

*All pipe has camlock fittings

6” Alum. Fittings:

2	6”	long sweep 90˚
8	6”	90˚ with M x F camlock
9	6”	45˚ with M x F camlock
4	6”	strainers

Emergency Bypass Inventory

4” Alum. Fittings:

2	4”	90˚ with M x F camlock
2	4”	45˚ with M x F camlock
1	4”	Bauer female x flange
1	4”	Bauer female x camlock male

3” Alum. Fittings:

1	3”	camlock male x flange
1	3”	camlock female x flange

HOSE IN CS AREA 2” to 12”

	SIZE	LENGTH	TYPE
1	12”	15’	Suction hose
1	12”	12’	Suction hose
1	12”	8’	Suction hose
2	6”	5’	Suction hose
1	6”	6’	Suction hose
3	4”	20’	Suction hose
3	2”	20’	Suction hose
4	6”	25’	Discharge hose
2	6”	50’	Discharge hose
4	4”	50’	Discharge hose
3	3”	25’	Discharge hose

C/S HOSE REEL TRAILER – T4270

SIZE	LENGTH	TYPE
6”	1200’	Discharge hose

Emergency Bypass Inventory

HOSE LOCATED AT PLANT 3” to 6”

	SIZE	LENGTH	TYPE
1	8”	25’	Suction hose
19	6”	20’	Suction hose
8	3”	20’	Suction hose
18	6”	25’	Discharge hose
3	4”	50’	Discharge hose
3	3”	25’	Discharge hose

TRAFFIC RAMPS

2 6’ x 15’ traffic path

TRAILER MOUNTED PUMPS

Equip.#	SIZE	BRAND	NOTES
E5287	10”	Gorman-Rupp	10” strainer
E5371	6”	Godwin	
E5374	6”	Godwin	
E5352	4”	Godwin	Dri-prime, no strainer
E5381	4”	Godwin	

Updated: 09-16-19 SN

Notice to Plumbers
New Trial Wye Replacement Process

Effective July 2, 2012, Union Sanitary District's Wye Replacement Process will change. Currently, when a contractor discovers a broken wye, USD is notified, then responds and replaces the wye after the contractor has excavated around it and properly shored the trench.

USD's new trial process allows the contractor to replace the wye after notifying the District when a broken wye is discovered. This will allow the contractor to make the repair in an efficient manner that enhances customer service.

Steps for Wye Replacement:

1. Contractor discovers broken wye
2. Contractor notifies USD by calling (510) 477-7500
3. USD will provide flow control, if necessary
4. Contractor excavates around the wye, provides proper shoring, and performs replacement of the wye
5. USD inspector inspects repair
6. Contractor backfills, compacts and paves excavated area
7. USD televises repair the next day
8. If the repair passes tv inspection, the contractor receives $500 for wye repair with their deposit refund.

- The $500 is the Contractor's payment for all labor and materials, wye and fittings, additional excavation, shoring, bedding, backfill, and surface restoration.
- When televised, if construction debris is found due to the wye installation, cleaning costs to remove the debris will be deducted from the $500 payment.
- The wye replacement work and all sewer work is warrantied by the Contractor for 1 year from the date of acceptance.
- If the contractor is unable to perform the wye replacement, USD crews can schedule to perform the wye replacement to be completed within 2 business days.

Protecting Our Communities and San Francisco Bay

5072 Benson Road
Union City, CA 94587

(510) 477-7500
www.unionsanitary.ca.gov

UNION SANITARY DISTRICT

PROTECTING
THE TRI-CITIES AND SAN FRANCISCO BAY

FALL 2019

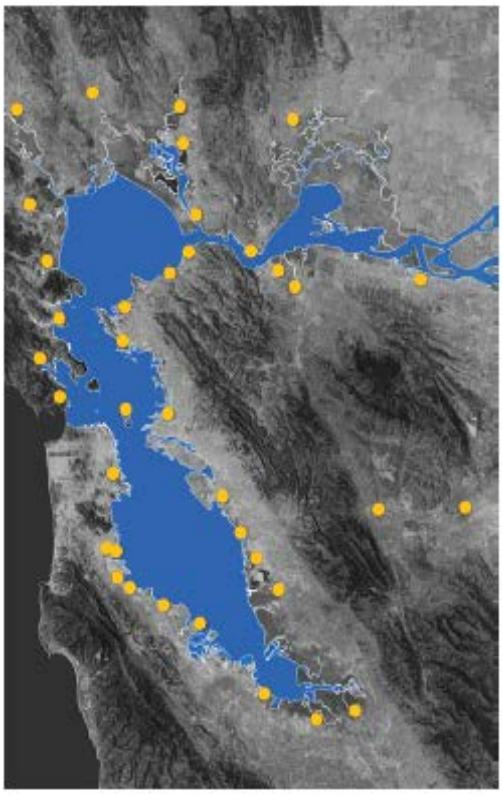

Dots above represent 37 wastewater agencies, including USD, that monitor nutrient levels and the health of San Francisco Bay.

MANAGING NUTRIENTS IN THE S.F. BAY

Nutrients such as nitrogen, ammonia, and phosphorus in water bodies have been a nationwide concern for many years. Though San Francisco Bay has a long history of high nutrient levels, elements such as tidal action, turbidity (cloudiness that hinders algal growth), and the presence of clams have reduced adverse impacts. However, turbidity has lessened, and clam populations are declining in parts of the Bay due to an abundance of predators. While obvious problems aren't apparent now, there is concern that the Bay could reach a tipping point that would affect its health.

Nutrients are naturally occurring compounds that may cause algae to grow faster than ecosystems can handle, leading to adverse impacts to water quality, food resources, and habitats as well as to decreases in oxygen that fish and aquatic life need to survive. USD is one of 37 regional wastewater agencies that discharge to the Bay contributing to research to increase understanding of how nutrient levels impact its water quality. These agencies are members of a joint powers authority known as Bay Area Clean Water Agencies (BACWA). BACWA members work collaboratively with the State's Regional Water Board, the EPA, the San Francisco Estuary Institute, and other organizations under a Nutrient Watershed Permit (Permit) to advance scientific understanding of how nutrients function throughout the Bay.

One of the nutrients of concern is Total Nitrogen (TN). Every day, each person produces approximately 0.03 lbs. of TN, which is sent to wastewater treatment plants. This means that USD receives about 10,684 lbs.of TN per day from its 356,000+ service area population. Wastewater treatment plants in the Bay Area represent about two-thirds of nutrient loads because they were not originally designed to remove nutrients due to technology and funding barriers.

The Permit's technical studies will provide critical information to the State's Regional Water Board and the EPA as they develop nutrient management policies. Nutrient reduction requirements at wastewater treatment plants and more stringent regulations that would necessitate additional treatment process improvements are highly expected to be implemented in the future.

Budget in Brief
Page 2

Courtesy Notice
Page 2

Future Projects
Page 3

Did You Know?
Page 3

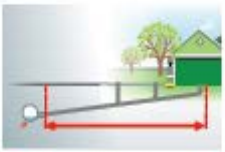

Sewer Lateral Info
Page 4

BUDGET IN BRIEF

USD provides wastewater collection, treatment, and disposal services to over 356,000 residents in the Tri-Cities. The District manages 834 miles of sewer lines, seven pump stations, and the buildings and equipment at the 33-acre treatment plant. Through careful fiscal planning, we safeguard these public assets to ensure responsible maintenance and reliable service to customers at the lowest feasible rates. See how USD's rates compare to others in the Bay Area at unionsanitary.ca.gov/sewer-service-charges.

FY 2020 Total Expenditures – $76,811,500

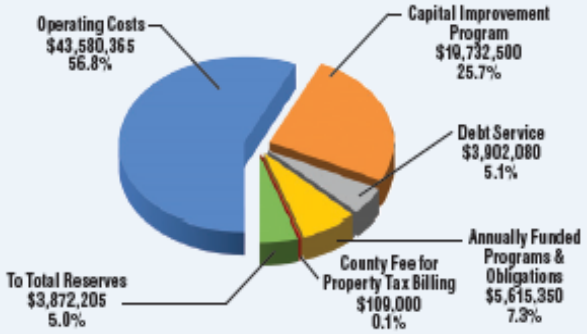

FY 2020 Total Revenues – $76,811,500

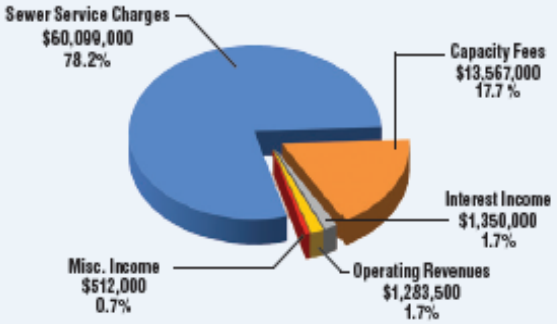

- Annually Funded Programs and Obligations include special studies and equipment replacement
- Operating Costs include employee, utilities, chemicals, maintenance, and administrative costs
- Capital Improvement Program includes project construction and related costs
- Sewer Service Charges include residential, commercial, and industrial customers
- Employee Costs ($27,456,879) represent 36% of USD's total FY 2020 budget and 63% of Operating Costs

COURTESY RATE ADJUSTMENT NOTICE:

FISCAL YEAR 2020 SEWER SERVICE RATES

On January 25, 2016, the District's Board of Directors held a public hearing and adopted Ordinance 31.39, which established sewer service charges for Fiscal Years 2017 through 2021. Prior to the public hearing, the District participated in two public meetings and mailed a notice of the public hearing and informational brochure to all property owners in our service area.

	Last Year's Rate FY 2019	This Year's Rate FY 2020
Residential ($ per Dwelling Unit)		
Single Family Residences	$407.12	$421.37
Multiple Family Residences	$352.97	$365.32
Commercial ($ per 1,000 gals)		
Strong	$10.28	$10.64
Moderate	$5.07	$5.25
Weak	$4.23	$4.37
Fast-Food Restaurant	$9.61	$9.95
Full-Service Restaurant	$12.73	$13.18
Industrial		
Volume ($/1,000 gals)	$2.39	$2.48
COD ($/1,000 lbs)	$317.14	$328.24
Suspended Solids ($/1,000 lbs)	$737.66	$763.48
Minimum Charge for non-residential customers	$352.97	$365.32

Annual Sewer Service Charges are placed on the Alameda County property tax statement. The charges appear on the tax statement as a single line item and are listed as "Union Sewer Svc". Sewer Service Charges are not a property tax and are not related to the assessed value of a property. They represent a charge for a service provided. USD includes the annual charges on property tax statements to save the administrative cost of generating and mailing separate invoices. The adjacent table depicts last year's rates and the new rates for FY 2020. If you have questions, call USD at (510) 477-7500 or email to: rates@unionsanitary.ca.gov.

USD'S ENHANCED TREATMENT & SITE UPGRADES:

BUILDING A VISION FOR THE FUTURE

For over a century, USD has provided wastewater services that improve water quality and protect public health for the Tri-Cities. The District is responsible for operating and maintaining over $669 million in assets. We plan carefully to maintain, rehabilitate, and replace infrastructure in a way that delivers optimum value to customers while ensuring compliance with increasingly stringent treatment standards.

As we meet today's challenges, we also prepare for tomorrow's. Although USD's infrastructure is well-maintained, portions of the treatment plant, located in Union City, date back to the 1960's. Major components of the plant are reaching the end of their useful life, will be unable to effectively treat wastewater to meet future state and federal requirements such as nutrient reductions, or do not meet current seismic standards. Additionally, successful water conservation practices and a growing population in the service area have resulted in higher solids volumes and concentrations in wastewater, making it more complicated and costly to treat.

USD has developed a roadmap for the treatment plant's infrastructure over the next 40+ years. It considers impending regulatory requirements such as nutrient restrictions, potential site layouts, and capacity needed to meet the future plans of the communities we serve. We rigorously examined multiple options to choose "best value" solutions for our Enhanced Treatment and Site Upgrades Projects. These include a combination of retrofitting, upgrading, and relocation of existing facilities as well as constructing new treatment processes and buildings. Project phases will be prioritized for maximum efficiency and cost-control. These improvements will reinforce our proud tradition of excellent service and stewardship of public funds for many decades to come.

USD plant today showing future projects:

- New or retrofitted treatment facilities
- New operations, maintenance, & support buildings

DID YOU KNOW?

THREE EASY WAYS TO PROTECT YOUR SEWER & THE ENVIRONMENT:

- **Your Toilet Isn't a Trashcan:** Don't flush dental floss, hair, bandages, or cigarette butts. Sanitary products, cotton swabs, paper towels, diapers, wipes, and facial tissues are made of materials that don't break down like toilet paper and can cause your lateral to back up. Keep these items out of your toilet.
- **Never Flush Wipes!** Those "flushable wipes" aren't so flushable. They may flush down your toilet, but wipes don't break down like toilet paper. They can bunch up to clog your pipes as well as impact our mains. Dispose of all wipes in your trash.
- **Never Put Fats, Oils, or Grease (FOG) in Your Drains:** They can solidify and cause messy backups into your home, onto streets, and down storm drains, which lead to the Bay. **COOL IT, CAN IT, and TRASH IT** instead: Let FOG cool down, then pour it into an empty soup or pet food can with absorbent paper and discard in your trash.

Find USD on Social Media

USD posts tips for keeping your sewer healthy and protecting the environment on our Facebook page and @usdtweets, plus news about our activities in the Tri-Cities. **Follow us for online info!**

UNION SANITARY DISTRICT
5072 Benson Road
Union City, CA 94587-2508

PRESORTED
STANDARD
US POSTAGE
PAID
SACRAMENTO, CA
PERMIT NO 333

ECR WSS

SEWER LATERAL QUESTIONS? WATCH OUR VIDEO

- **View lots of useful information for property owners,** including tips for contacting USD if you think you have a sewer problem, researching a licensed, insured drain cleaning company or plumber, actions you can take to keep your sewer lateral healthy, and more. Check it out at unionsanitary.ca.gov/lateral-video.
- **Your sewer lateral is a pipe that connects the plumbing system in your residence or business to USD's main sewer line. Property owners are responsible for maintenance, repair, or replacement of their entire sewer lateral up to its connection to USD's main line.** This includes portions located under sidewalks and streets (see exhibit below).
- **Do's and Don'ts for a Healthy Lateral:** Only human waste, soaps, toilet paper, food ground in a garbage disposal, household cleaning products, and over-the-counter drain cleaners should go into your sewer line. Keep wipes, fats, oils, grease, medicine, and toxic chemicals out of your lateral.
- **If a problem is found in your lateral, before any work begins, a USD repair permit is required** (even for repairs on private property). Call (510) 477-7500 for more information.

BOARD OF DIRECTORS

Jennifer Toy, *President*
Fremont

Tom Handley, *Vice-President*
Fremont

Pat Kite, *Secretary*
Newark

Manny Fernandez
Union City

Anjali Lathi
Fremont

EXECUTIVE MANAGEMENT

Paul Eldredge
General Manager

Sami Ghossain
Technical Services Manager

Armando Lopez
Treatment & Disposal Services Manager

James Schofield
Collection Services Manager

Robert Simonich
Fabrication, Maintenance, & Construction Manager

Typical Residential Sewer Lateral

From USD's Lateral Video

For more tips about keeping your lateral healthy, check our website at www.unionsanitary.ca.gov or call us at (510) 477-7500.

UNION SANITARY DISTRICT'S MISSION:
To safely and responsibly collect and treat wastewater, and to recover resources from process waste streams, while protecting human health and improving the environment in a way that benefits the Tri-Cities and all USD stakeholders.

Printed on recycled paper

(510) 477-7500 ◆ contactusd@unionsanitary.ca.gov

Additional Permits Are Required For Repairs Beyond Your Property Line

If a sewer repair involves digging in a street or other public right of way, an encroachment permit will be required from your City **in addition to** your USD permit. Work beyond your property line must be done by a licensed contractor. Call your City for more information.

Fremont:	**(510) 494-4700**
Newark:	**(510) 578-4589**
Union City:	**(510) 675-5303**

Call Before You Dig!!

If you are planning any project that requires digging – even if it's inside your property line – call 811 or (800) 227-2600 48 hours before you dig to have your utilities marked free of charge.

Know the location of your underground utilities to prevent accidents or injuries.
www.usanorth.org

811 Know what's below. Call before you dig.

Sewer Lateral Repair Checklist:

- ❑ Obtain a USD Repair Permit
- ❑ Obtain an Encroachment Permit from your city for repairs outside of your property line
- ❑ Call Underground Service Alert (811) 48 hours before you dig
- ❑ Questions? Call USD for more information: (510) 477-7500

Sanitary Sewer Courtesy Report

- ❑ The USD public main has been checked and a backup was found. The problem has been corrected.
- ❑ The USD public main has been checked and is flowing normally. If there is a sewer problem, the property owner can research "sewer contractors," or "plumbing, drains and sewer cleaning" to find vendors. USD recommends getting estimates from more than one company.

_____
Date

_____
Time

_____
USD Employee

Notes to Customer:

UNION SANITARY DISTRICT
5072 Benson Road
Union City, CA 94587

Protecting The Tri-Cities and San Francisco Bay

www.unionsanitary.ca.gov

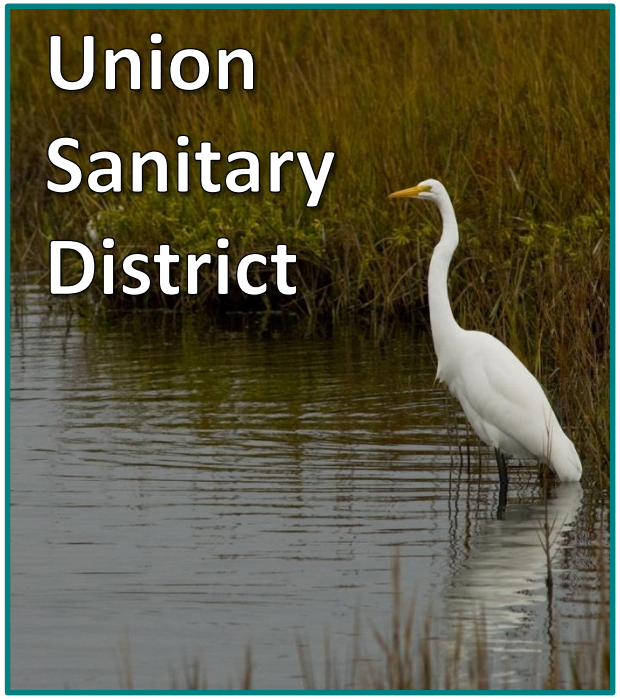

Sewer Laterals: Information for Property Owners

Protecting Human Health, Property, and San Francisco Bay

UNION SANITARY DISTRICT

Union Sanitary District is a public agency providing wastewater collection, treatment, and disposal services to the cities of Fremont, Newark, and Union City, CA

What Is Union Sanitary District?

Union Sanitary District (USD) collects and treats up to 30 million gallons of wastewater every day from residential, commercial and industrial customers in Fremont, Newark and Union City. The District maintains over 800 miles of sanitary sewer pipeline throughout our service area.

Each home or commercial building has a separate connection to USD's public sanitary sewer main. These separate connections are called sewer laterals.

In accordance with USD Ordinance No. 34, it is the property owner's responsibility to maintain and repair their own sewer lateral from the building up to the point of connection with the public sewer main. This includes both the portion on private property and the portion located beneath the sidewalk and street up to the point where the lateral connects to the public sewer main.

What Should I Do If I Have A Sewer Backup?

When a sewer backup or other problem occurs, call Union Sanitary District at:

(510) 477-7500
(24 hours a day)

USD will inspect the sewer main free of charge. If a problem is found in USD's public main, it will be repaired as soon as possible.

What If USD's Main Is Clear?

If the public main is clear, the property owner will be informed that the blockage is probably in the sewer lateral. The property owner is responsible for maintenance or repair.

Caution: When trying to locate a sewer problem, **never open manholes or other USD structures. Due to potential hazards, only USD personnel are authorized to open and inspect these structures.**

Property owners can hire contractors to make repairs, or, if equipped, can make repairs themselves. Contractors can be researched under listings such as "Plumbing," "Drain and Sewer Cleaning," or "Sewer Contractors." USD recommends getting estimates from more than one company.

Before any work is begun, a USD Repair Permit is required – even for repairs on private property.

How Do I Get A USD Permit?

Call USD at (510) 477-7500, or visit the Permits and Fees pages on our website at www.unionsanitary.ca.gov to obtain a permit application.

Once you are aware of a sewer lateral problem, it should be repaired as soon as possible. Sewer lateral leaks and overflows are a public health risk and can damage the environment.

Locating Utilities & Permitting for Repairs In Streets

See the back panel of this brochure for important information.

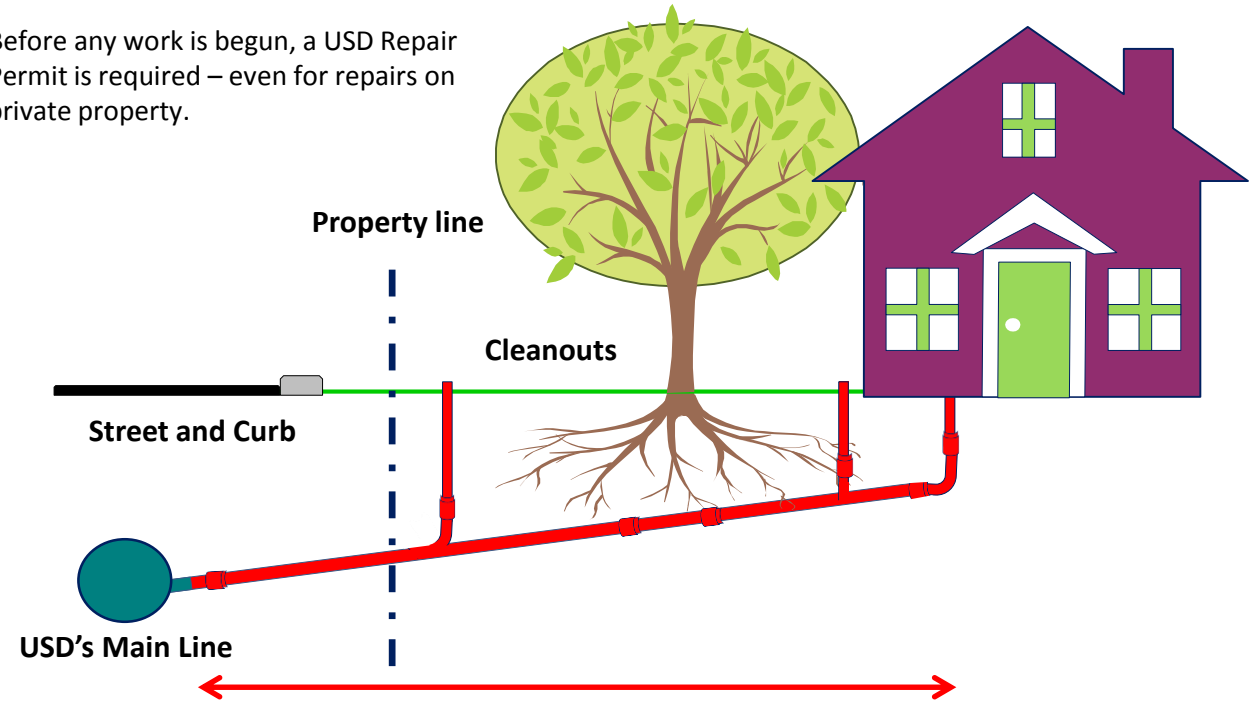

Property Owners are responsible for the entire lateral from the building to where it meets USD's main sewer line.

Facts about USD

On an average day, the District treats approximately 30 million gallons of wastewater from homes, businesses and industries in the Tri-Cities, serving a population of about 323,000 people.

USD maintains 764 miles of sanitary sewer pipeline—enough to reach from our treatment plant to Salt Lake City, Utah. It takes six years to complete a maintenance cycle of all the lines.

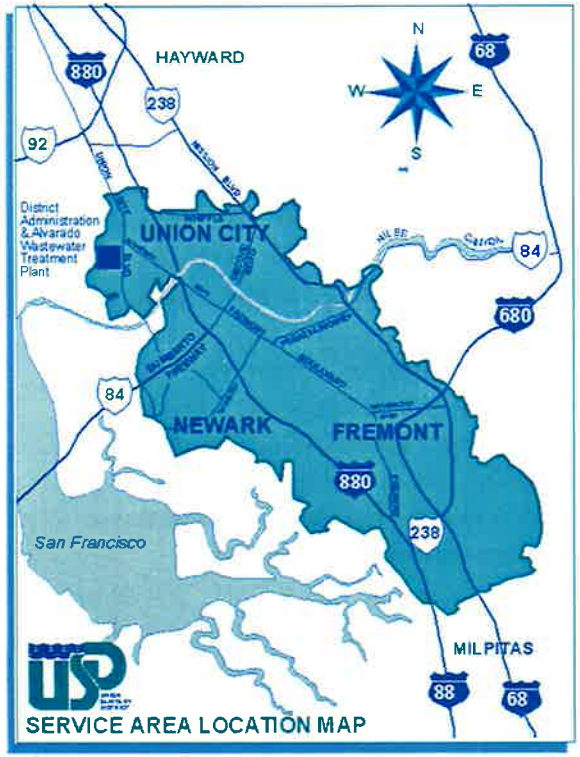

SERVICE AREA LOCATION MAP

Contacts

To request that USD open a manhole, please contact us at:
510-477–7553

Plan Checking and Permits:
510-477–7619

USA North:
1-800-227-2600
(Call two working days before you dig)

Online Information:
Permit information and USD's Ordinances are available online at http://www.unionsanitary.com, under "Doing business with USD".

Union Sanitary District
5072 Benson Road
Union City, CA 94587
510/477-7500
510/477-7501 Fax
www.unionsanitary.com

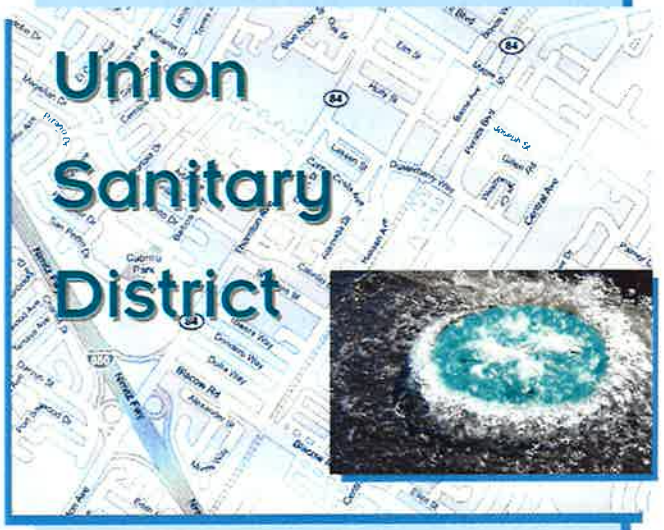

Preventing Spills And Minimizing Impacts To The Environment:

Information For Plumbers and Building Contractors

Union Sanitary District is a public agency providing wastewater collection, treatment, and disposal services to the cities of Fremont, Newark, and Union City, CA

Union Sanitary District:

Protecting human health and the environment

Union Sanitary District continuously seeks ways to prevent spills and adverse impacts to its customers and the environment. When commercial entities doing work in the District are not aware of USD's standards for construction, methods for removing blockages, and proper operations and maintenance activities, their actions can sometimes result in sanitary sewer overflows which can negatively effect public health and waterways.

Plumbers and Building Contractors working in Union Sanitary District's service area are bound by law to follow USD's Ordinance 34.04, which can be viewed at *www.unionsanitary.com*. Printed versions of the Ordinance are available at the Customer Service counter free of charge, and Standard Specifications can be purchased for ten dollars.

Tips for working in USD's Service Area

Never open a manhole! Deadly sewer gasses are odorless and undetectable without proper equipment. For your own protection against possible hazards, call USD to open it for you.

When remodeling an existing home, don't dump construction debris such as plaster, stucco, grout or any waste liquids in the cleanout.

Protect sewer lines so that dirt, sand and rock do not enter while you are working on them. Bits and pieces that enter the line can cause problems later.

When rodding out sewers to clear a blockage, flush the line with large quantities of water both during and after your activity.

Never assume that the location where you plan to dig is free of underground utilities—they can be "laying in wait" almost anywhere. The easiest and *legal* way to confirm utility location is by contacting Underground Service Alert before you dig. Visit their website at www.usanorth.org for more information.

Digging underneath the sewer line will cause it to lose support, resulting in a sag or dropped joints. After you have disturbed the area around the sewer line, backfill and compact properly, then re-lay the sewer pipe.

USD's Mission

The aim of Union Sanitary District is to protect human health and the environment by responsibly collecting, treating and disposing of wastewater for the cities of Fremont, Newark and Union City.

- ✓ The District was founded in 1918.
- ✓ It serves a total area of 60.2 square miles and has 131 employees.
- ✓ Domestic and residential customers make up 73% of the total flow that comes to USD for treatment.

As the Tri-Cities' "Steward of the Sewers", we are committed to an ongoing cycle of cleaning, inspection and repair of our collection system, and to responding quickly when our customers experience problems with their sewer lines. This helps ensure continuous, uninterrupted service. We encourage the adoption of best practices by commercial entities working within the District to create a quality product that serves our customers and community well.

Try This Experiment To See Why Airflow Is Required To Carry Wastewater & Odors Away

Fill a clear glass with water to an inch from the top.

Place a straw into the water until you touch the bottom of the glass.

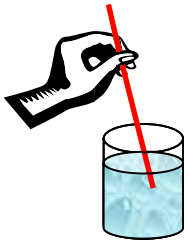

Slowly raise the straw, you will notice that water stays in the glass.

Place the straw in the glass and touch bottom again.

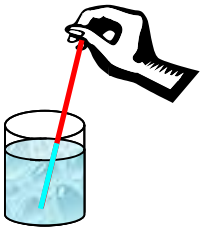

Place your thumb over the top of the straw and raise it again.

When your thumb blocks the end of the straw, water stays trapped in it.

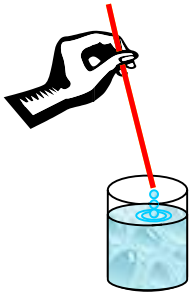

Remove your thumb from the top of the straw, and the water drains back into the glass.

You just proved that your vents must remain clear for wastewater to drain away!

5072 Benson Road
Union City, CA 94587
(510) 477-7500

Protecting The Tri-Cities and San Francisco Bay

www.unionsanitary.ca.gov

August 2012

Union Sanitary District

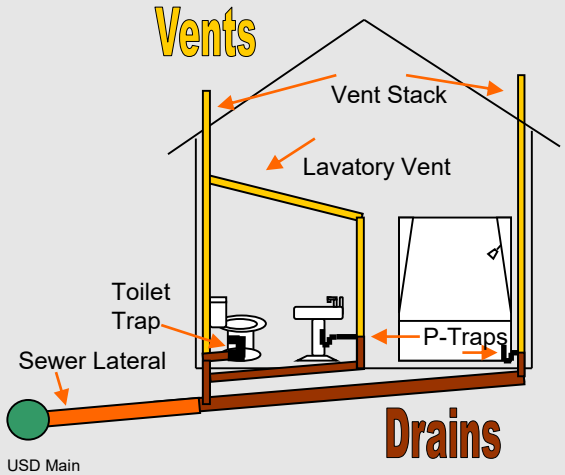

Traps & Vents:

Information For Property Owners

Union Sanitary District is a public agency providing wastewater collection, treatment, and disposal services to the cities of Fremont, Newark, and Union City, CA

Maintain Your Traps & Vents For A Healthy Sewer System

Homes and businesses have plumbing systems that are made up of vents and drains. Drains begin at each fixture and connect into a larger network of pipes to carry the water used in sinks, toilets, tubs, etc. into the sanitary sewer system.

Traps are typically visible under sinks, and are similar to the drawing at right. Although you can't see every trap, each drain in your building should have one.

Water resting at the bottom of this "U" shaped device creates a constant seal between the fixture and the sanitary sewer system.

Properly functioning traps are a critical element of the plumbing system and are what keeps offensive and potentially harmful fumes generated in the sewer from entering your home or business.

Vents serve several equally important purposes. They provide a means for the naturally occurring fumes from the sewer to exit through the vents on your roof and keep your pipes flowing freely. If a vent is plugged, airflow is restricted and drains will not function correctly. You must have adequate venting because as water leaves, it is replaced with air; without airflow, drains will not function properly and will move slowly. (See illustration on back flap)

Tips For Preventative Maintenance: Keep Your Trap Full Of Water!

Trap Maintenance:

Infrequently used plumbing facilities such as guest bathrooms will experience a loss of seal at the fixtures through evaporation. But you can solve this problem by periodically running a little water into each trap on a monthly basis. This simple step keeps the trap full and working properly.

Vent Maintenance:

You should **clean your vent system annually**. If you have tree limbs, branches etc. overhanging your roof, cut them back well away from the vents. Leaves and other types of debris can fall into the vents and block the circulation of air that is critical to ensuring the proper operation of the drains in your building. Spiders or birds can build nests that block your vents too.

Caution: Standing on your roof to do this maintenance can be hazardous! Be sure that you are informed of proper procedures and take safety precautions.

Vents that are functioning properly will allow pressure created in the sewer system during USD's normal cleaning operations to escape correctly.

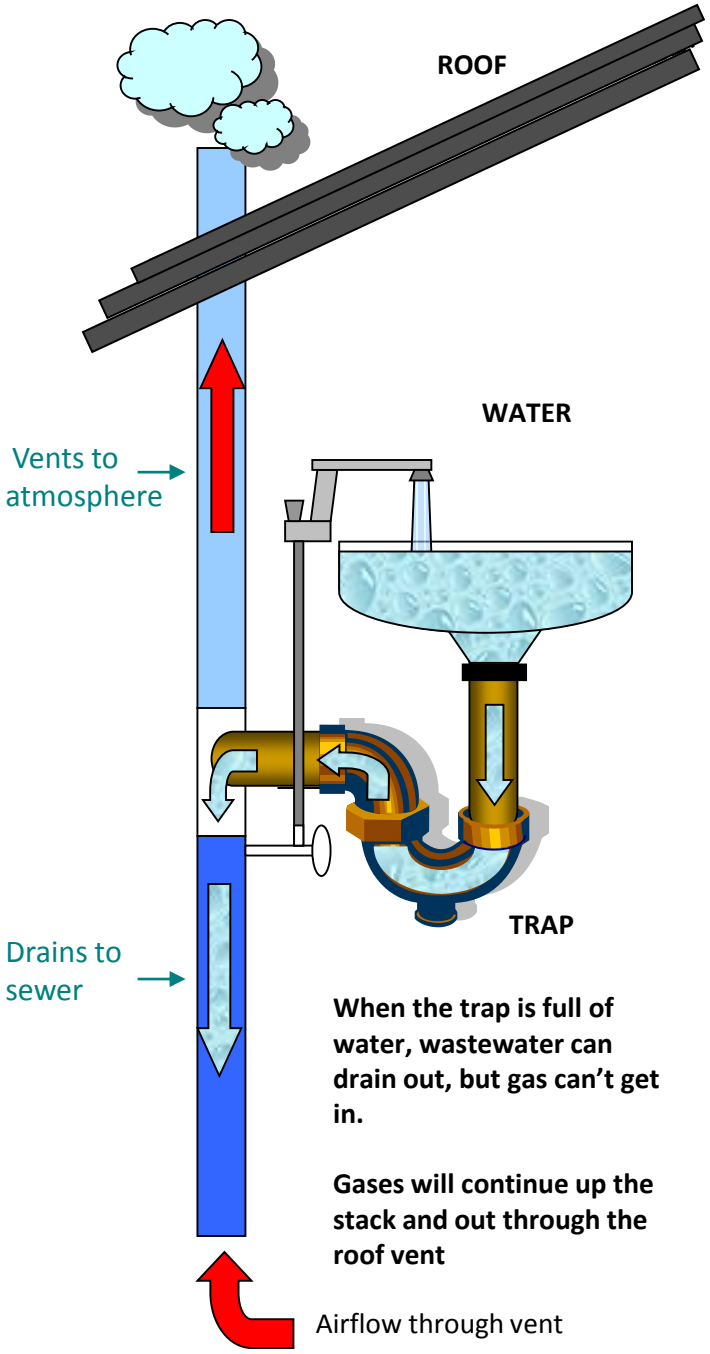

UNION SANITARY DISTRICT

ATTENTION HOME OWNER OR CURRENT RESIDENT !!!

☐ Union Sanitary District attempted to contact you on _____
(date)

at this # _____.
(from our records)

☐ Union Sanitary District will be cleaning the sewer line in your neighborhood during this week

of _____.

Sometimes these operations cause bubbling and splashing in toilets or sinks. Tips on reducing the impacts are shown on the reverse side.

☐ Union Sanitary District needs access to manhole on property.

For additional questions or to update your contact information, please call:

Union Sanitary District
Supervisor: (510) 477-7542
Planner: (510) 477-7548

UNION SANITARY DISTRICT

ATTENTION HOME OWNER OR CURRENT RESIDENT !!!

☐ Union Sanitary District attempted to contact you on _____
(date)

at this # _____.
(from our records)

☐ Union Sanitary District will be cleaning the sewer line in your neighborhood during this week

of _____.

Sometimes these operations cause bubbling and splashing in toilets or sinks. Tips on reducing the impacts are shown on the reverse side.

☐ Union Sanitary District needs access to manhole on property.

For additional questions or to update your contact information, please call:

Union Sanitary District
Supervisor: (510) 477-7542
Planner: (510) 477-7548

THINGS TO DO

- [ ] Run water in all sinks, tubs and showers to ensure that the traps are full of water.
- [ ] Put all toilets lids down.
- [ ] Clean your sewer vents annually.
- [ ] If splashing does occur, please call us for clean-up.

For more information please call:

Union Sanitary District
(510) 477-7500
www.unionsanitary.com

THINGS TO DO

- [ ] Run water in all sinks, tubs and showers to ensure that the traps are full of water.
- [ ] Put all toilets lids down.
- [ ] Clean your sewer vents annually.
- [ ] If splashing does occur, please call us for clean-up.

For more information please call:

Union Sanitary District
(510) 477-7500
www.unionsanitary.com

Sewer System
Management Plan (SSMP)

USD Standard Specifications & Information Bulletin

2017 Standard Specifications and Details

Union Sanitary District's 2017 Standard Specifications and Details for sanitary sewers govern design and all work in connection with main and building sewer construction within the Union Sanitary District. The previous 2006 Standard Specifications and Information Bulletin was superseded by the 2017 Standard Specifications and Details beginning on July 3, 2017.

Some notable changes included:

- **Risers at the end run of sewers for new main construction are no longer allowed.**
- **New manhole neck length requirement is a maximum of 12-inches (previously 18 inches and will remain 18 inches for existing manholes).**
- **Eleven (11) new details:**
    1. **Zero Lot Line Lateral Connection Detail**
    2. **Sand/Oil/Water Separator Detail**
    3. **Clarifier Detail**
    4. **Grease Trap Detail**
    5. **Trash Enclosure Detail**
    6. **Single Family Residential Pump Station Detail**
    7. **Pool Filter Backwash Sump Detail**
    8. **Air Gap for Fire Sprinkler Test Detail**
    9. **Street/Access Road Requirements Detail**
    10. **Pipe Concrete Cap Detail**
    11. **Manhole Transition Riser Detail**
- **New Section 17 – Grease and Oil Collection Systems and Additional Connection Requirements (previously Section 11.11).**

Electronic copies can be downloaded in Adobe Reader format from the District's website at www.unionsanitary.ca.gov/permits-and-fees/forms-documents-ordinances.

Consulting engineers and contractors who have worked on developer projects within the District the past 5 years were sent notices announcing the new 2017 Standard Specifications and Details going into effect on July 3, 2017. Plans currently under review will continue to adhere to the 2006 Standard Specifications while plans submitted on or after July 3rd will adhere to the 2017 Standard Specifications.

STANDARD SPECIFICATIONS AND DETAILS

UNION SANITARY DISTRICT

UNION SANITARY DISTRICT
2017

Union Sanitary District Service Area Location Map

UNION SANITARY DISTRICT

STANDARD SPECIFICATIONS AND DETAILS
Table of Contents

SECTION 1 - INTRODUCTION 1
1.01 INTRODUCTION 1
SECTION 2 - DEFINITIONS AND TERMS 2
2.01 DEFINITIONS AND TERMS 2
2.02 ABBREVIATIONS 3
2.03 PIPE TYPES 4
SECTION 3 - SCOPE OF WORK 5
3.01 SCOPE 5
3.02 GUARANTEE OF WORK 5
3.03 INDEMNIFICATION 5
3.04 SAFETY 5
SECTION 4 - SITE PREPARATION 6
4.01 SITE PREPARATION 6
4.02 ACCEPTANCE OF GROUNDWATER FROM CLEANUP PROJECTS 6
SECTION 5 - SEWER PIPE LINES 7
5.01 SEWER CONSTRUCTION MATERIALS 7
5.02 PIPE MATERIALS 7
5.03 PIPE COUPLINGS 11
5.04 SADDLE 11
5.05 EMBEDMENT 11
5.06 STAINLESS STEEL BANDS 11
SECTION 6 - PORTLAND CEMENT CONCRETE AND MORTAR 12
6.01 CONCRETE 12
6.02 MORTAR AND GROUT 12
SECTION 7 - SEWER PIPE AND STRUCTURE INSTALLATION 14
7.01 SEWER PIPE LAYING 14
7.02 SPLICE 16
7.03 MANHOLE 17
7.04 RISER (MAIN SEWER ONLY) 19
7.05 CLEANOUT TO GRADE (BUILDING SEWER ONLY) 20
7.06 TWO-WAY CLEANOUT TO GRADE (BUILDING SEWER ONLY) 20
7.07 TEST WYE (BUILDING SEWER ONLY) 20
7.08 SEWER THROUGH CASING 20
7.09 REHABILITATION OF BUILDING SEWERS USING PIPE-BURSTING 21

SECTION 8 - EXCAVATION 24
8.01 DEFINITION 24
8.02 OPEN TRENCHING 24
SECTION 9 - TRENCH BACKFILLING 27
9.01 TRENCH BACKFILLING 27
9.02 PIPE FOUNDATION - (IF REQUIRED BY ENGINEER) 27
9.03 GEOTEXTILE FILTER FABRIC 27
9.04 PIPE EMBEDMENT 28
9.05 TRENCH BACKFILL MATERIAL 30
SECTION 10 - PAVING REPLACEMENT 32
10.01 DEFINITION 32
10.02 PAVING IN PUBLIC RIGHTS-OF-WAY OR PUBLIC UTILITY EASEMENT 32
10.03 PAVING IN UNION SANITARY DISTRICT EASEMENTS AND IN PRIVATE PROPERTY 32
SECTION 11 - MISCELLANEOUS REQUIREMENTS 33
11.01 INSPECTION 33
11.02 ALTERATIONS 33
11.03 DEFECTIVE WORK AND/OR MATERIALS 33
11.04 MANHOLE PROTECTION 33
11.05 USE OF EXISTING BUILDING SEWERS 33
11.06 BUILDING SEWER MARKING 34
11.07 MANHOLE MARKING 34
11.08 REPAIR OF DAMAGED SEWERS AND OTHER UTILITIES 34
11.09 CONNECTION OR ADJUSTMENTS TO EXISTING MAIN SEWERS OR APPURTENANCES 35
11.10 ABANDONMENTS 35
SECTION 12 - TESTING 37
12.01 TESTING MAIN SEWERS 37
12.02 TESTING BUILDING SEWERS 39
12.03 TESTING PRESSURE SEWERS 40
12.04 MANHOLE VACUUM TESTING 40
SECTION 13 - TELEVISION INSPECTION 42
13.01 INSPECTION OF MAIN SEWERS 42
13.02 WHEN TESTED 42
SECTION 14 - CLEANING 43
14.01 CLEANING 43
14.02 DISCHARGE OF CLEANING WATER 43
SECTION 15 - SITE CLEANUP AND RESTORATION 44
15.01 SITE CLEANUP AND RESTORATION 44

SECTION 16 - REQUIREMENTS FOR ISSUANCE OF SEWER CONSTRUCTION PERMITS 45
16.01 PROPERTY TO BE SERVED BY USD 45
16.02 INSURANCE REQUIREMENTS 45
16.03 LICENSE REQUIREMENTS 45
16.04 BOND/DEPOSIT REQUIREMENTS 45
16.05 FEES AND CHARGES 46
16.06 SUBMISSION OF DATA FOR MAIN SEWERS 47
16.07 SUBMISSION OF DATA FOR BUILDING SEWERS 48
16.08 ENCROACHMENT AGREEMENT 50
16.09 MINIMUM REQUIREMENTS FOR DIGITAL SUBMITTAL 50

SECTION 17 - GREASE AND OIL COLLECTION SYSTEMS AND ADDITIONAL CONNECTION REQUIREMENTS 54
17.01 GENERAL 54
17.02 GREASE INTERCEPTORS 54
17.03 GREASE TRAPS 54
17.04 CONNECTIONS 54
17.05 DISHWASHERS 54
17.06 GARBAGE DISPOSALS 55
17.07 CAR WASH AND INDUSTRIAL VEHICLE CLEANING FACILITIES 55
17.08 TRASH ENCLOSURES 55
17.09 TRASH COMPACTORS 55
17.10 PARKING STRUCTURES AND LOTS: 55
17.11 VEHICLE EQUIPMENT REPAIR AND MAINTENANCE SHOPS 55
17.12 FUELING STATIONS (RETAIL, WHOLESALE AND PRIVATE) 55
17.13 TRENCH DRAINS: 55
17.14 SWIMMING POOLS, SPAS AND FOUNTAINS 56
17.15 OUTSIDE UTILITY EQUIPMENT AREAS 56
17.16 ELEVATOR AND ESCALATOR SUMPS 56
17.17 CLAY, CERAMIC, GRANITE, MARBLE, GLASS GRINDING AND STONE CUTTING FACILITIES 56

SECTION 18 - MISCELLANEOUS MAIN SEWER AND BUILDING SEWER REQUIREMENTS 57
18.01 REPAIR OR RELOCATION OF EXISTING MAIN SEWER OR APPURTENANCES 57
18.02 CONNECTION OR ADJUSTMENTS TO EXISTING MAIN SEWERS OR APPURTENANCES 57
18.03 REPAIR, RELOCATION OF OR CONNECTION TO EXISTING BUILDING SEWERS 58
18.04 USE OF EXISTING BUILDING SEWERS 58
18.05 ABANDONMENTS 58
18.06 NUMBER OF BUILDING SEWERS REQUIRED 58

SECTION 19 - REQUIREMENTS PRIOR TO START OF CONSTRUCTION 59
19.01 PERMIT 59
19.02 STAKING AND CUT SHEETS 59
19.03 INSPECTION 60

SECTION 20 - APPROVAL AND ACCEPTANCE OF CONSTRUCTION 61
20.01 MAIN SEWERS 61
20.02 BUILDING SEWERS 61
20.03 PAYMENT 61

SECTION 21 - SPECIFICATIONS AND DETAILS 62
21.01 MATERIALS AND METHODS OF CONSTRUCTION 62
21.02 CONSTRUCTION DETAILS 62

SECTION 22 - DESIGN AND POLICY STANDARDS FOR MAIN SEWERS 63
22.01 PIPE MATERIALS 63
22.02 PIPE MATERIAL CHANGES 63
22.03 SIZE AND SLOPE 63
22.04 ALIGNMENT 63
22.05 CROSS CONNECTION 63
22.06 GRADE 63
22.07 GRADE STAKES 63
22.08 DESIGN DEPTH 64
22.09 MINIMUM PIPE COVER 64
22.10 TRENCH INTERSECTIONS 64
22.11 HORIZONTAL UTILITY CLEARANCE 64
22.12 CROSSING STORM DRAINS 64
22.13 CROSSING WATER MAINS 64
22.14 STRUCTURE LOCATIONS 65
22.15 MAIN LOCATIONS 65
22.16 INVERT ELEVATIONS AT MANHOLES 65
22.17 MAXIMUM DEFLECTION AT MANHOLES 65
22.18 BUILDING SEWER CONNECTION AT MANHOLES 65
22.19 MANHOLE RIM ELEVATION 65
22.20 CONNECTION TO EXISTING MANHOLE 65
22.21 CONNECTIONS BETWEEN MAIN SEWERS 66
22.22 DROP MANHOLES 66
22.23 BOLT-DOWN MANHOLES 66
22.24 EASEMENT WIDTH REQUIREMENTS 66
22.25 EASEMENT PAVING REQUIREMENTS 66
22.26 EASEMENT ACCESS REQUIREMENTS 66

SECTION 23 - DESIGN AND POLICY STANDARDS FOR BUILDING SEWERS 67
23.01 SIZE AND SLOPE 67
23.02 PIPE MATERIALS 67
23.03 ALIGNMENT 67
23.04 BUILDING PLUMBING (BUILDING DRAIN) LOCATION 67
23.05 GRADE 67
23.06 GRADE STAKES 68
23.07 CURB MARKING 68
23.08 CONNECTION TO EXISTING MAIN SEWER 68
23.09 ELEVATION AT CONNECTION TO MAIN SEWER 68
23.10 CONNECTION TO EXISTING BUILDING SEWER 68
23.11 CONNECTION TO BUILDING DRAIN (PLUMBING KICK-OUT) 69
23.12 CLEARANCES 69
23.13 PARALLEL TO FOOTING 69
23.14 CROSSING STORM DRAINS 69
23.15 CROSSING WATER MAINS 69
23.16 MINIMUM PIPE COVER 69
23.17 TRENCH INTERSECTIONS 70
23.18 HORIZONTAL UTILITY CLEARANCE 70
23.19 STRUCTURE TYPE AND LOCATION 70
23.20 OVERFLOW DEVICES 70
23.21 NUMBER OF BUILDING SEWERS REQUIRED 70
23.22 PRIVATE PUMPING STATIONS 71
23.23 NEW UTILITIES CROSSING EXISTING SEWER MAINS AND BUILDING SEWERS 71

STANDARD DETAILS 73

INDEX 111

Sewer System
Management Plan (SSMP)

Notification & Reporting of SSO's

- **Any party can report an SSO to USD by calling (510) 477-7500 (main number) anytime and follow the prompts to an Operator (Receptionist or Plant Operator). The Operator will collect all of the information.**

- **The District Operator will dispatch the call to the appropriate person within minutes of receiving the original call.**

- **A District employee will arrive at the site within one (1) hour.**

- **If there is a Category 1, 2 or 3 spill, the responder will notify management immediately and will be reported as required.**

- **For all other SSO's, the responder will notify Management by the next business day.**

- **Management will notify CAL-OES and the other agencies as required.**

- **Warning signs will be posted whenever there is potential of endangerment to human health.**

SSO Response

Standard Operating Procedures

UNION SANITARY DISTRICT

SOP-CS103 / JUNE 2018

Author: Shawn Nesgis
Owner: CS Manager
Reviewers: CS Manager, CS Coach, CSW Lead and/or CSW II, R&S Coach

ADMINISTRATIVE

A. Introduction

1. This SOP contains the instructions and steps that District Employees will follow to respond to an SSO. All work shall be performed safely in compliance with applicable standards and in a manner that minimizes adverse impacts.

B. Cancellation

1. This SOP cancels SOP-CS103 SSO Response dated JUNE 2017

C. References

1. Union Sanitary District Collection Services Staff
2. SOP-CS100-5 Wash Down Street and Manholes
3. Ken Kerry. *Operation and Maintenance of Wastewater Collection System*. Office of Wastewater Programs Volume 1. CSU Sacramento. 2004. p. 554

D. Objectives

1. Upon completion the operator will be aware of the steps to:
   a. Respond to a Sanitary Sewer Overflow (SSO)
   b. Estimate an SSO
   c. Sample an SSO
   d. Clean up an SSO

E. Equipment/Personnel Required

1. Personnel – Two Collection System Workers (minimum)
2. PPE – Hard hat, gloves, steel-toe safety shoes, respiratory protection, eye protection, face shield, hearing protection, safety vest
3. Equipment – Emergency Response Trailer

F. Terminology

1. NOTE is used when information is available that can assist the Operator in accomplishing his or her task. Information is advisory in nature.
2. CAUTION is used when special cautions must be taken by the Operator. Failure to following prescribed steps may cause serious bodily injury and damage equipment.
3. WARNING is used when special cautions must be taken by the Operator. Failure to follow prescribed steps will cause loss of life or limb and severely damage equipment.

G. Employee Responsibility

1. Employees are responsible to follow District policies and procedures for the safe and effective operation of the District equipment.

H. Management Responsibility

1. Management is responsible to provide employees adequate education and training to safely and effectively operate District equipment.

PROCEDURES

1. SSO Response

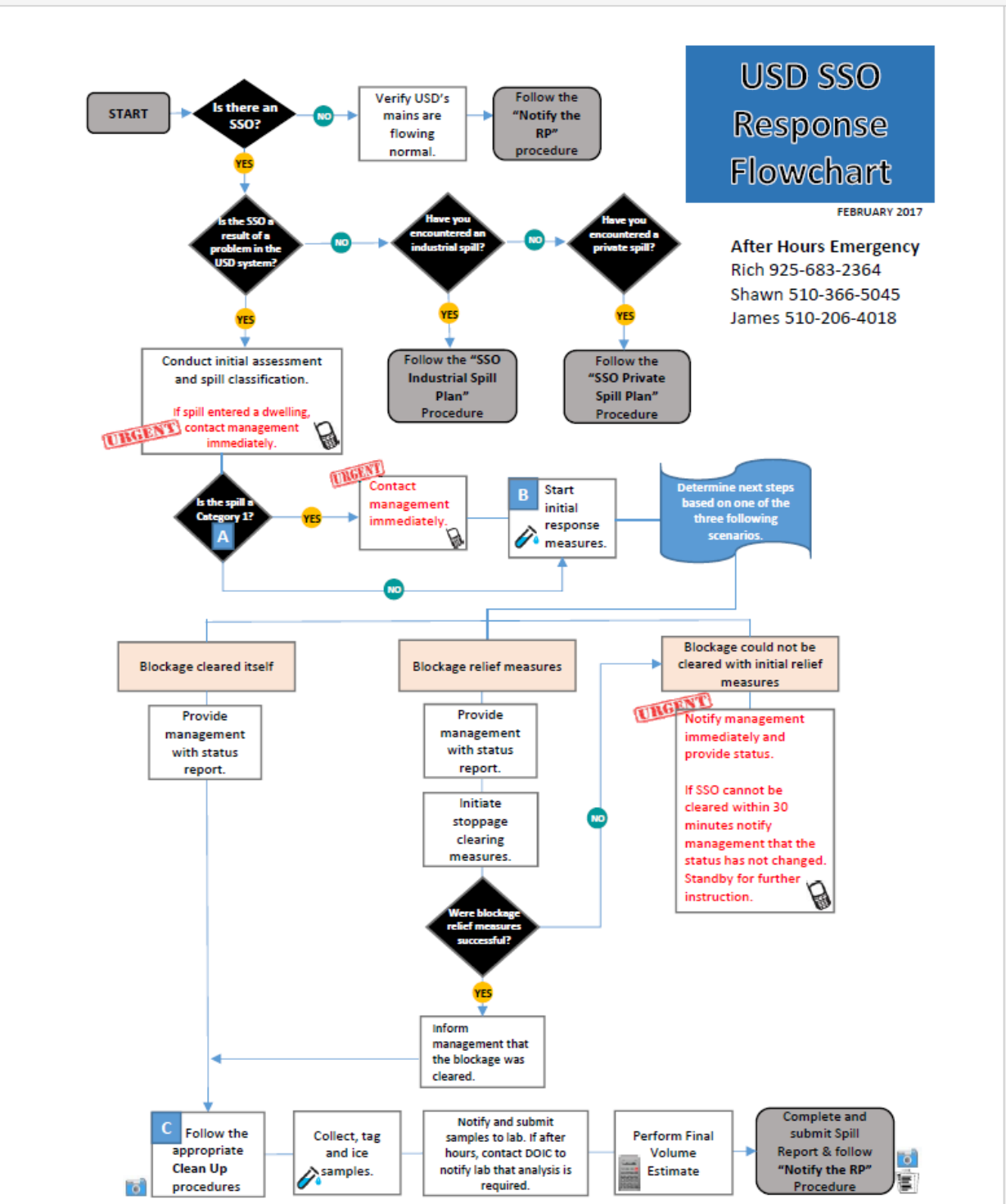

A	**Spill Classification** **SSO Category 1** ❑ Come into contact with surface water? ❑ Result in fish kill? ❑ Substantially endanger human health? Eg: contamination of drinking water, etc. ❑ Entered storm drain, preliminary indications are that it has migrated? ❑ Enter a storm drain that directly feeds any receiving water If you answered yes to ANY of the above questions the spill is classified as a **Category 1**; contact management immediately. **SSO Category 2** ❑ Discharges of untreated or partially treated wastewater of 1,000 gallons or greater resulting from an enrollee's sanitary sewer system failure, or flow conditions that do not reach a surface water or a drainage channel. ❑ Discharges that reach a separate municipal storm sewer system are considered Category 2 SSOs if the entire SSO discharged to the storm drain system is fully recovered and disposed of properly. **SSO Category 3** ❑ All other discharges of untreated or partially treated wastewater resulting from an enrollee's sanitary sewer system failure or flow condition. ❑ Specifically, discharges of untreated or partially treated wastewater of less than 1,000 gallons resulting from an enrollee's sanitary sewer system failure or flow condition that do not reach a surface water or a drainage channel. ❑ Discharges of less than 1,000 gallons that reach a municipal separate storm sewer system are considered Category 3 SSOs if the entire SSO discharged to the storm drain system is fully recovered and disposed of properly.
B	**Initial Response Measures** While waiting for back-up spill response personnel and equipment the first responder will begin containment of the spill; including the following steps. ❑ Set up traffic control ❑ Isolate area with caution tape and place appropriate signage ❑ Review the map ❑ Set up berms, curbs and mats ❑ Plug appropriate lines ❑ Take initial photos ❑ Category 1: Collect required samples utilizing the spill sampling kit ❑ If the spill entered a dwelling, contact Management immediately ❑ Interview reporting party and other witnesses (as time permits) ❑ Start the **SPILL RESPONSE REPORT** Once containment is complete the responder will inform management of current status.
C	**Clean Up Procedures** ❑ Reclaim all solids and liquids resulting from the spill and dispose of in the sanitary sewer system ❑ Clean any contaminated storm drains, contain and reclaim waters generated in the cleaning process ❑ Deduct wash down water from final calculation for the report ❑ Follow SOP-CS100-5 Wash Down Street and Manhole procedures ❑ Take pictures during/after clean-up

INDUSTRIAL SPILL PLAN

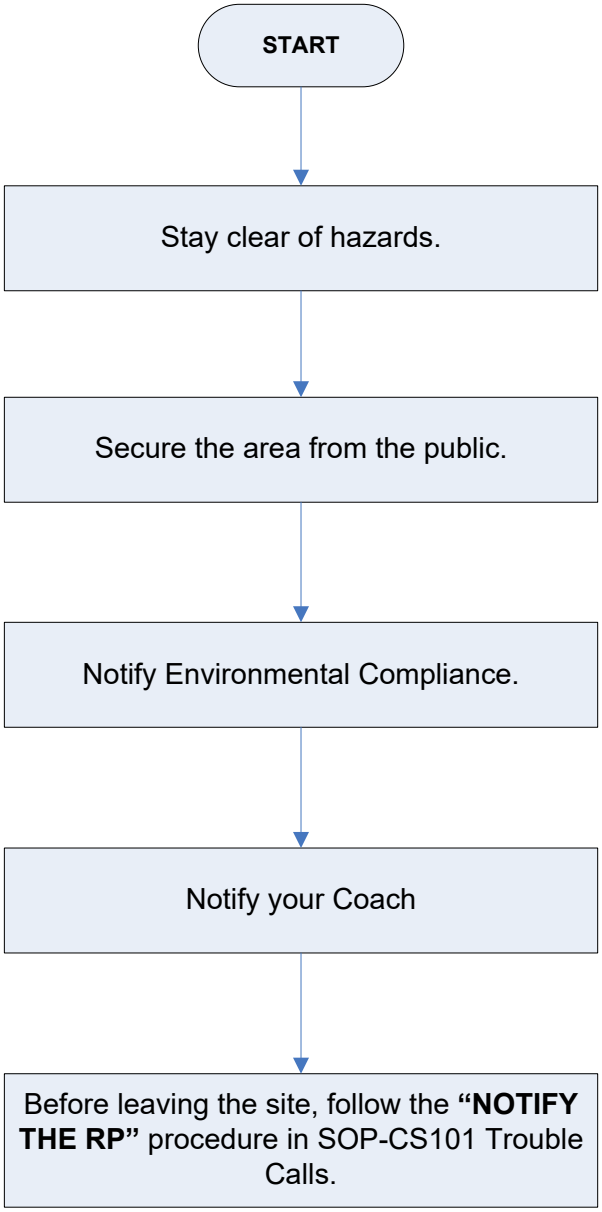

An "Industrial Spill" is defined here as any material other than sewage.

When Field Staff notifies the Environmental Compliance and the CS Coach about a spill, the following information must be communicated:

1. What is the substance spilled? (If this can be determined safely)
2. Has the spill made it into the collection system? Is there a risk that it will?
3. When did the spill occur (if known)?
4. What is the nearest manhole #?

All of the information communicated shall also be entered in the "Comments" section of the associated Service Request.

The Coaches will make the next necessary contacts, including (at minimum) the Designated Operator in Charge (DOIC) at the treatment plant.

1. Based on the CS system, where will the material end up first (a pump station or the treatment plant)?
2. How long until the material reaches the plant (estimate)?

PRIVATE SSO PLAN

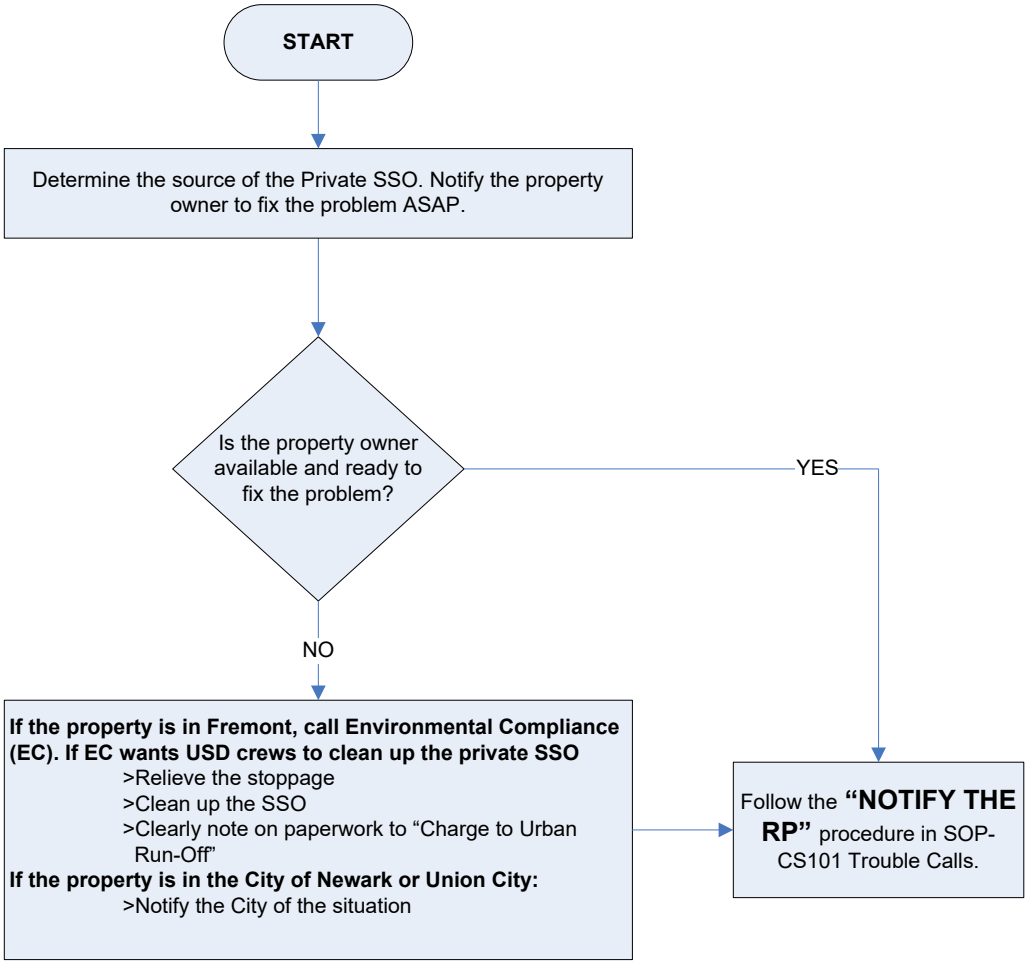

2. SSO Estimation

NOTE

Fill out SSO Volume Estimating Worksheet.

2.1 Eyeball Estimate Method

NOTE

This method is useful for contained SSOs up to approximately 200 gallons.

Step 1: Imagine the amount of water that would spill from a bucket or a barrel.

- A bucket contains 5 gallons and a barrel contains 55 gallons.

Step 2: If the SSO is larger than 55 gallons, try to break the standing water into barrels

- Multiply this barrel estimation by 55 gallons

Step 3: Proceed to use other estimation methods if the SSO looks to be more than four (4) barrels

Step 4: Task Complete

2.2 Measured Volume Method

NOTE

The volume of most small SSOs that have been contained can be estimated using this method. The shape, dimensions, and the depth of the contained wastewater are needed. The shape and dimensions are used to calculate the area of the SSOs and the depths is used to calculate volume.

Step 1: Sketch the shape of the contained sewage

Step 2: Measure or pace off the dimensions

Step 3: Measure the depth at several locations and select an average

Step 4: Convert the dimensions, including depth, to feet

Step 5: Calculate the area in square feet using the following formulas

NOTE

Rectangle: Area = length (feet) x width (feet)
Circle: Area = radius (feet) x radius (feet) x 3.14
Triangle: Area = base (feet) x height (feet) x 0.5

Step 6: Multiply the area (square feet) times the average depth (in feet) to obtain the volume in cubic feet

Step 7: Multiply the volume in cubic feet by 7.48 to convert it to gallons

Step 8: Task Complete

2.3 Duration and Flow rate Method

NOTE

Calculating the volume of larger SSOs, where it is difficult or impossible to measure the area and depth, requires a different approach. In this method, the separate estimates are made of the duration of the SSO and the flow rate.

The duration is the elapsed time from the time the SSO started to the time the flow was restored.

Step 1: Establish start time

NOTE

Use one of the following approaches to establish start time:

1. Inquire about observations made by local residents.
- SSOs that occur in right-of-way are usually observed and reported promptly.
- SSOs that occur out of the public view can go on longer before detection.
2. Observations from odors and sounds (e.g., water running in a normally dry creek) can be used to determine start time.

NOTE

Conditions at the SSO site change over time. Initially there will be limited deposits of toilet paper and other sewage solids. After a few days to a week, the sewage solids form a light-colored residue. After a few weeks to a month, the sewage solids turn dark. The quantity of toilet paper and other materials of sewage origin increase over time.

Step 2: Take photographs to document the observations

- They can be helpful if questions arise later in the process

NOTE

It is important to remember that SSOs may not be continuous. Blockages are not usually complete (some flow continues). In this case the SSO would occur during the peak flow periods (typically 10:00 to 12:00 and 13:00 to 16:00 each day). SSO that occur due to peak flows in excess of capacity will occur only during, and for a short period after, heavy rainfall.

Step 3: Establish end time

- Field crews on-site observe the “blow down” that occurs when the blockage has been removed.
- The “blow down” can also be observed in downstream flow meters, if installed

Step 4: Task complete

2.4 Flow Rate

Step 1: Estimate flow rate

NOTE

The flow rate is the average flow that has left the sewer system during the time of the SSO.

There are three ways to estimate the flow rate:

1. The USD SSO Flow Rate Estimating Tool. These pictures show water flowing from various manhole covers, at a variety of flow rates. The first responder shall select the appropriate flow rate from the tool. If possible, Photographs are useful in documenting the basis for the flow rate estimate.

2. Counting Connections. Once the location of the SSO is known, the number of upstream connections can be determined from the sewer maps. Multiply the number of connections by 200 to 250 gallons per day per connection or 8 to 10 gallons per hour per connection.

3. Using a Flow Meter. A meter may be used after an SSO event to establish the normal rate of flow for a particular sewer.

NOTE

The following example is given. To estimate SSO volume:

Once the duration and flow rate have been estimated, the volume of the SSO is the product of the duration in hours or days, and the flow rate in gallons per hour or gallons per day.

SSO Start Time = 1100
SSO End Time = 1400
SSO Duration = 3 hours
SSO Duration in Minutes (3 X 60 = 180) 180 minutes
3.3GPM X 180Min = 596 Gallons

Step 2: Task Complete

3. SSO Monitoring Plan

NOTE

First determine whether or not the SSO has reached receiving water, by conducting a field test for Ammonia. If results are negative, no further sampling is required. However, if the SSO has come in contact with receiving water, the SSO Monitoring Sampling Plan will be followed. The receiving water will be monitored at three locations: 1) Upstream from the "point of the discharge," 2) Downstream from the "point of the discharge," and 3) At the "point of the discharge" to the receiving water. Three parameters will be monitored: 1) Ammonia, 2) Fecal Coliform, and 3) Enterococci.

Should the spill occur during normal working hours, notify laboratory personnel for field assistance.

In the event that the SSO occurs after hours and immediate assessment is needed, proceed with this procedure to sample the three locations. Lab staff will be required for fecal/entero testing within 8 hours of sample collection. If lab work is needed, contact the plant D.O.I.C. right away and have them contact the T&D Manager "On Call". Have the D.O.I.C. inform the manager of the incident so the manager can call in laboratory personnel to determine that the waterway or receiving water level may change to perform the sampling while there is still flow.

3.1 Point of Discharge Sampling / Testing

Step 1: Identify the "point of the discharge" to the receiving water

Step 2: Photograph, map and mark the location for future reference

Step 3: Perform field tests for Ammonia

- Follow the instructions inside the CS Spill Kit
- The field test for Ammonia will help determine if it is an actual SSO.

Step 4: Record the testing results

CAUTION

Use Personal Protective Equipment (PPE) while performing sampling. Proceed with testing and/or sampling only when it is determined to be feasible and safe.

Step 5: Collect 2 bacteriological samples (Fecal Coliform and Enterococci) in special sterilized bottles (Do not contaminate)

- The sterile bottles can be found in the CS Spill Kit with sampling instructions

Step 6: Collect a 500ml sample for laboratory confirmation of the ammonia concentration (Bottles can be found in CS Spill Kit)

Step 7: Label the samples with the date, time, location, and sampler's initials

Step 8: Keep the bacteriological samples under ice (cold packs) until transferred to the laboratory's process refrigerator

- Use of a cooler

Step 9: Task Complete

3.2 Upstream Sampling

Step 1: Move at least 10' upstream from the point of the discharge to the receiving water (to obtain a uncontaminated baseline sample)

Step 2: Follow the procedure mentioned in "3.1 Point of Discharge Sampling/Testing" (Steps 5 – 8)

Step 3: Task Complete

3.3 Downstream Spill Travel Time & Sampling

Step 1: Determine how far the SSO has traveled downstream

- Estimate rate of flow of stream
- Use a bobber floating on the water to determine how far it travels in one minute x estimated number of minutes SSO since first reached the water
- Capture bobber with net and pole (rinse off and stow back in container)

Step 2: Move to 2 locations downstream

- 50' and 200' downstream from the point where the SSO enters the receiving water and
- A point nearest the extent of how far the SSO traveled

Step 3: Determine a location downstream to sample that represents the current condition of receiving water.

Step 4: Follow the directions mentioned in “3.1 Point of Discharge Sampling / Testing”(Steps 5 - 8)

Step 5: Task Complete

NOTE

(Do Not contaminate bacteriological samples and Do Not overfill.) All samples should be labelled with location, date, time, preservation and other pertinent information so laboratory staff can analyze and generate data for regulatory reporting purposes.

There is an 8 hour holding time for the indicator bacteria “Enterococcus and Fecal Coliform”. Laboratory personnel will need to be notified.

Management will determine the laboratory staff’s follow-up sampling and testing.

Laboratory service hours are:

Monday through Friday, 8AM to 4:30PM.

Samples collected and preserved will be delivered to the District’s state certified laboratory under the Environmental Laboratory Accreditation Program (ELAP) certificate number #1324.

Laboratory materials, reagents, and equipment are all maintained as a part of the laboratory’s quality assurance program to produce legally defensible data as required as an ELAP certified laboratory.

4. SSO Clean Up

NOTE

To minimize health hazards to the public and to protect the environment, start cleaning the SSO area as soon as possible or immediately after the overflow stops.

Step 1: Install air plugs on storm lines whenever possible to contain the SSO

Step 2: Remove all debris found in the SSO surface area

- Remove all sewage solids with rakes and shovels
- Flush area with fresh water to remove debris
- Remove soil last, only if in area where people travel (contact coach before removing soil)
- Place back into the collection system or dispose of properly
- Do NOT add chlorine solution

Step 3: If plugs are used in the storm lines to contain SSO, pump wastewater back into the collection system and remove plugs from storm lines

- If plugs are not used, visually inspect the storm drain system and determine if additional cleaning is needed
- If additional cleaning is needed, use the hydro flush vacuum to flush and vacuum all water generated during cleaning. Return water to sanitary system. See “SOP-CS100-5 Wash Down Street and Manholes” for details.

Step 4: Inspect the collections system and SSO areas before you leave

Step 5: Immediately notify management if any of the following events occur

- Human health endangerment
- Property damage
- If there is a discharge to drainage channel and/or surface water
- There is a discharge to a storm that was not fully captured and returned to the sanitary sewer system
- SSO volume is ≥ 1000 gallons.
- Fish kill

Step 6: If SSO has come in contact with creek, pond, body of water or flood control channel, see “Section 3 SSO Sampling” of this SOP to

conduct sampling.

Step 7: Take pictures after clean up

Step 8: Task Complete

Appendix A: USD SSO Flow Estimating Tool

UNION SANITARY DISTRICT

16 3/8" Riser, Page 1 of 2

16 3/8" Riser

1 GPM

2 GPM

5 GPM

10 GPM

15 GPM

20 GPM

25 GPM

Instructions: Since USD has several different sizes of manhole lids varying in weight and number of pick holes, it is important to follow these steps when using this SSO flow rate estimating tool:

1) If you are able, take a picture of overflowing manhole/riser.
2) Measure lid diameter and select the correct chart to use. There are 4 different charts, one for each diameter. If you have a lid that is an odd size or does not match one of the charts, ask a coach for help. If the lid is stuck to the casting or any of the vent holes are plugged, make a note of that on the SSO estimation worksheet and take a picture.
3) Match overflowing lid to the closest picture on the correct chart, and use that as the rate of flow on the SSO estimation worksheet.

16 3/8" Riser, Page 2 of 2

30 GPM

50 GPM

75 GPM

100 GPM

125 GPM

150 GPM

175 GPM

200 GPM

<u>Instructions:</u> Since USD has several different sizes of manhole lids varying in weight and number of pick holes, it is important to follow these steps when using this SSO flow rate estimating tool:

1) **If you are able, take a picture of overflowing manhole/riser.**
2) **Measure lid diameter and select the correct chart to use. There are 4 different charts, one for each diameter. If you have a lid that is an odd size or does not match one of the charts, ask a coach for help. If the lid is stuck to the casting or any of the vent holes are plugged, make a note of that on the SSO estimation worksheet and take a picture.**
3) **Match overflowing lid to the closest picture on the correct chart, and use that as the rate of flow on the SSO estimation worksheet.**

25 1/4" Manhole, Page 1 of 2

25 1/4" Manhole

1 GPM

2 GPM

5 GPM

10 GPM

15 GPM

20 GPM

25 GPM

Instructions: Since USD has several different sizes of manhole lids varying in weight and number of pick holes, it is important to follow these steps when using this SSO flow rate estimating tool:

1) If you are able, take a picture of overflowing manhole/riser.
2) Measure lid diameter and select the correct chart to use. There are 4 different charts, one for each diameter. If you have a lid that is an odd size or does not match one of the charts, ask a coach for help. If the lid is stuck to the casting or any of the vent holes are plugged, make a note of that on the SSO estimation worksheet and take a picture.
3) Match overflowing lid to the closest picture on the correct chart, and use that as the rate of flow on the SSO estimation worksheet.

25 1/4" Manhole, Page 2 of 2

30 GPM

50 GPM

75 GPM

100 GPM

125 GPM

150 GPM

175 GPM

200 GPM

<u>Instructions:</u> Since USD has several different sizes of manhole lids varying in weight and number of pick holes, it is important to follow these steps when using this SSO flow rate estimating tool:

1) **If you are able, take a picture of overflowing manhole/riser.**
2) **Measure lid diameter and select the correct chart to use. There are 4 different charts, one for each diameter. If you have a lid that is an odd size or does not match one of the charts, ask a coach for help. If the lid is stuck to the casting or any of the vent holes are plugged, make a note of that on the SSO estimation worksheet and take a picture.**
3) **Match overflowing lid to the closest picture on the correct chart, and use that as the rate of flow on the SSO estimation worksheet.**

27 3/4" Manhole, Page 1 of 2

27 3/4" Manhole

1 GPM

2 GPM

5 GPM

10 GPM

15 GPM

20 GPM

25 GPM

Instructions: Since USD has several different sizes of manhole lids varying in weight and number of pick holes, it is important to follow these steps when using this SSO flow rate estimating tool:

1) If you are able, take a picture of overflowing manhole/riser.
2) Measure lid diameter and select the correct chart to use. There are 4 different charts, one for each diameter. If you have a lid that is an odd size or does not match one of the charts, ask a coach for help. If the lid is stuck to the casting or any of the vent holes are plugged, make a note of that on the SSO estimation worksheet and take a picture.
3) Match overflowing lid to the closest picture on the correct chart, and use that as the rate of flow on the SSO estimation worksheet.

27 3/4" Manhole, Page 2 of 2

30 GPM

50 GPM

75 GPM

100 GPM

125 GPM

150 GPM

175 GPM

200 GPM

Instructions: Since USD has several different sizes of manhole lids varying in weight and number of pick holes, it is important to follow these steps when using this SSO flow rate estimating tool:

1) If you are able, take a picture of overflowing manhole/riser.
2) Measure lid diameter and select the correct chart to use. There are 4 different charts, one for each diameter. If you have a lid that is an odd size or does not match one of the charts, ask a coach for help. If the lid is stuck to the casting or any of the vent holes are plugged, make a note of that on the SSO estimation worksheet and take a picture.
3) Match overflowing lid to the closest picture on the correct chart, and use that as the rate of flow on the SSO estimation worksheet.

36" Manhole, Page 1 of 2

36" Manhole

1 GPM

2 GPM

5 GPM

10 GPM

15 GPM

20 GPM

25 GPM

Instructions: Since USD has several different sizes of manhole lids varying in weight and number of pick holes, it is important to follow these steps when using this SSO flow rate estimating tool:

1) If you are able, take a picture of overflowing manhole/riser.
2) Measure lid diameter and select the correct chart to use. There are 4 different charts, one for each diameter. If you have a lid that is an odd size or does not match one of the charts, ask a coach for help. If the lid is stuck to the casting or any of the vent holes are plugged, make a note of that on the SSO estimation worksheet and take a picture.
3) Match overflowing lid to the closest picture on the correct chart, and use that as the rate of flow on the SSO estimation worksheet.

36" Manhole, Page 2 of 2

30 GPM

50 GPM

75 GPM

100 GPM

125 GPM

150 GPM

175 GPM

200 GPM

<u>Instructions:</u> Since USD has several different sizes of manhole lids varying in weight and number of pick holes, it is important to follow these steps when using this SSO flow rate estimating tool:

1) **If you are able, take a picture of overflowing manhole/riser.**
2) **Measure lid diameter and select the correct chart to use. There are 4 different charts, one for each diameter. If you have a lid that is an odd size or does not match one of the charts, ask a coach for help. If the lid is stuck to the casting or any of the vent holes are plugged, make a note of that on the SSO estimation worksheet and take a picture.**
3) **Match overflowing lid to the closest picture on the correct chart, and use that as the rate of flow on the SSO estimation worksheet.**

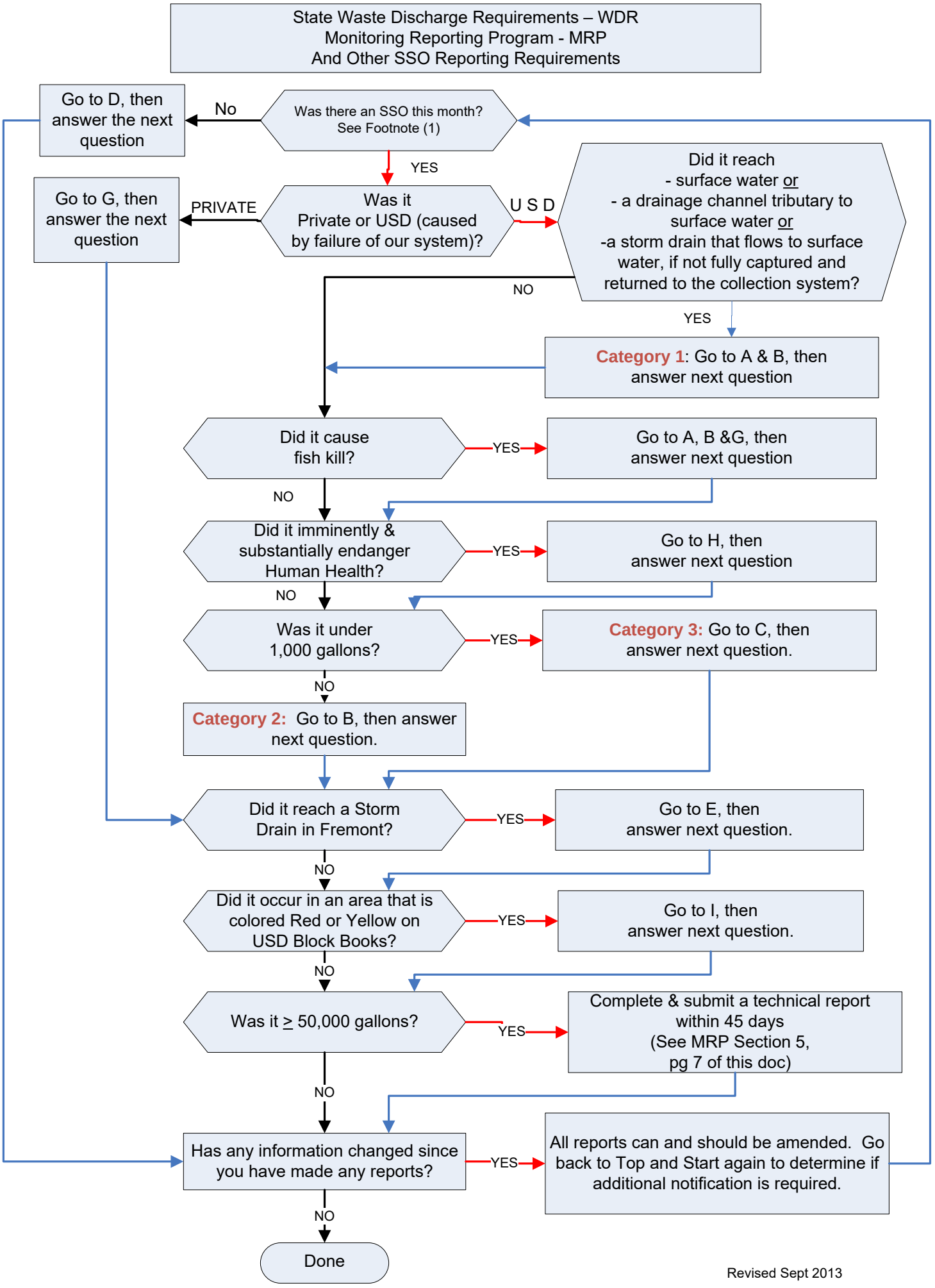
State Waste Discharge Requirements – WDR
Monitoring Reporting Program - MRP
And Other SSO Reporting Requirements
Was there an SSO this month? See Footnote (1)
No
Go to D, then answer the next question
YES
Was it Private or USD (caused by failure of our system)?
PRIVATE
Go to G, then answer the next question
U S D
Did it reach - surface water or - a drainage channel tributary to surface water or -a storm drain that flows to surface water, if not fully captured and returned to the collection system?
NO
YES
Category 1: Go to A & B, then answer next question
Did it cause fish kill?
YES
Go to A, B &G, then answer next question
NO
Did it imminently & substantially endanger Human Health?
YES
Go to H, then answer next question
NO
Was it under 1,000 gallons?
YES
Category 3: Go to C, then answer next question.
NO
Category 2: Go to B, then answer next question.
Did it reach a Storm Drain in Fremont?
YES
Go to E, then answer next question.
NO
Did it occur in an area that is colored Red or Yellow on USD Block Books?
YES
Go to I, then answer next question.
NO
Was it ≥ 50,000 gallons?
YES
Complete & submit a technical report within 45 days (See MRP Section 5, pg 7 of this doc)
NO
Has any information changed since you have made any reports?
YES
All reports can and should be amended. Go back to Top and Start again to determine if additional notification is required.
NO
Done
Revised Sept 2013

Required Actions

A	If ≥ 1,000 gallons, must notify CAL- OES and County Health ASAP but not more than 2 hours: **(6)** • 1. CAL-OES – California Office of Emergency Services - Phone (800) 852-7550. Obtain a Notification Control #. • 2. County Division of Environmental Health @ (510) 567-6700, provide CAL-OES control # • 3. Document all phone calls & actions in email to Shawn, Andy and Rich Currie.
B	This is a Category 1 or 2 SSO: • Must report on CIWQS as soon as possible but no later than within 3 Business Days per MRP **(3)** • Submit Final certified Report within 15 calendar days of the end date of SSO. o See Footnote **(5)** for required information. • All Final Report of SSOs reported on CIWQS** must be certified by your Agency's Legally Responsible Official – LRO. • Forward the CIWQS email of the certified report to steve.dennis@acwd.com and gregorylee.buncab@acwd.com. • If CIWQS not available, you must FAX to Region Water Board at 510.622.2460
C	This is a Category 3 SSO: • Must report on CIWQS** within 30 days after the end of the calendar month in which the SSO occurred See Footnote **(4)** for requirement information. • All Final Report of SSOs reported on CIWQS** must be certified by your Agency's Legally Responsible Official – LRO. • Forward the CIWQS email of the certified report to steve.dennis@acwd.com and gregorylee.buncab@acwd.com. • If CIWQS not available, you must FAX to Regional Water Boardat 510.622.2460
D	If no SSOs within a Calendar month, you must report on California Integrated Water Quality System – CIWQS certifying no SSOs within 30 days of end of calendar month. This can be done quarterly, if desired.
E	Call EC Team ASAP to report SSO as Urban Runoff issue in Fremont within one (1) hour.
F	This is a Private SSO: • If it is in Fremont, notify the EC Team as an Urban Runoff issue. • If it is in Newark or Union City, notify their Fire Departments. • Reporting on CIWQS is optional. **(2)**
G	Must also notify California Department of Fish & Game: (need to call one) • Alameda County Dispatch (24 hour) – (831) 649-2810 • Bay Delta Region – (707) 944-5500 • Main (Sacramento) – (916) 445-0411
H	• Must also notify County Division of Environmental Health @ (510) 567-6700 • Consider posting signs to Notify Public. • Notify City Fire Department (For Fremont, notify Environmental Compliance Team)
I	• If the SSO was a Category 1 in an area shaded RED, Notify ACWD ASAP @ 668-4200 • If the SSO was a Category 1 in an area shaded Yellow, Notify ACWD within 2 hours • @ 668-4200 • If the SSO was a Category 3 in any area, forward the CIWQS email of the certified report • to steve.dennis@acwd.com and gregorylee.buncab@acwd.com.

	Footnotes
(1)	WDR Waste Discharge Requirement – Sanitary sewer overflow (SSO) – Any overflow, spill, release, discharge or diversion of untreated or partially treated wastewater from a sanitary sewer system. SSOs include: (i) Overflows or releases of untreated or partially treated wastewater that reach waters of the United States; (ii) Overflows or releases of untreated or partially treated wastewater that do not reach waters of the United States; and (iii) Wastewater backups into buildings and on private property that are caused by blockages or flow conditions within the publicly owned portion of a sanitary sewer system.
	DEFINITIONS [see Section A on page 5 of Order 2006-0003-DWQ, for Sanitary Sewer overflow definition
CATEGORY 1	Discharges of untreated or partially treated wastewater of any volume resulting from an enrollee's sanitary sewer system failure or flow condition that: • Reach surface water and/or reach a drainage channel tributary to a surface water; or • Reach a Municipal Separate Storm Sewer System (MS4) and are not fully captured and returned to the sanitary sewer system or not otherwise captured and disposed of properly. Any volume of wastewater not recovered from the MS4 is considered to have reached surface water unless the storm drain system discharges to a dedicated storm water or groundwater infiltration basin (e.g., infiltration pit, percolation pond).
CATEGORY 2	Discharges of untreated or partially treated wastewater of 1,000 gallons or greater resulting from an enrollee's sanitary sewer system failure or flow condition that do not reach surface water, a drainage channel, or a MS4 unless the entire SSO discharged to the storm drain system is fully recovered and disposed of properly.
CATEGORY 3	All other discharges of untreated or partially treated wastewater resulting from an enrollee's sanitary sewer system failure or flow condition.
PRIVATE LATERAL SEWAGE DISCHARGE (PLSD)	Discharges of untreated or partially treated wastewater resulting from blockages or otherproblems within a privately owned sewer lateral connected to the enrollee's sanitary sewer system or from other private sewer assets. PLSDs that the enrollee becomes aware of may be voluntarily reported to the California Integrated Water Quality System (CIWQS) Online SSO Database.
(2)	MRP Monitoring & Report Program – The Enrollee must identify the sewage discharge as occurring and caused by a private lateral, and a responsible party (other than the Enrollee) should be identified, if known. See Footnote **(5)**

	Footnotes
(3)	MRP Monitoring & Report Program – Category 1 &2 SSOs – Must be reported as soon as (1) the Enrollee has knowledge of the discharge, (2) reporting is possible, and (3) reporting can be provided without substantially impeding cleanup or other emergency measures. Initial reporting of Category 1 &2 SSOs must be reported to the Online SSO System as soon as possible but no later than 3 business days after the Enrollee is made aware of the SSO. Minimum information that must be contained in the 3-day report must include all information identified in section 8 below. See Footnote (5)
(4)	MRP Monitoring & Report Program - Category 3 SSOs – Must be reported to the Online SSO Database within 30 days after the end of the calendar month in which the SSO occurs (e.g. all SSOs occurring in the month of January must be entered into the database by March 1st.) See Footnote (5)
(5)	See pages 6-13
(6)	**NOTIFICATION REQUIREMENTS** Although Regional Water Quality Control Boards (Regional Water Boards) and the State Water Board (collectively, the Water Boards) staff do not have duties as first responders, this MRP is an appropriate mechanism to ensure that the agencies that have first responder duties are notified in a timely manner in order to protect public health and beneficial uses. 1. For any Category 1 SSO greater than or equal to 1,000 gallons that results in a discharge to a surface water or spilled in a location where it probably will be discharged to surface water, either directly or by way of a drainage channel or MS4, the enrollee shall, as soon as possible, but not later than two (2) hours after (A) the enrollee has knowledge of the discharge, (B) notification is possible, and (C) notification can be provided without substantially impeding cleanup or other emergency measures, notify the Cal OES and obtain a notification control number. 2. To satisfy notification requirements for each applicable SSO, the enrollee shall provide the information requested by Cal OES before receiving a control number. Spill information requested by Cal OES may include: i. Name of person notifying Cal OES and direct return phone number. ii. Estimated SSO volume discharged (gallons). iii. If ongoing, estimated SSO discharge rate (gallons per minute). iv. SSO Incident Description: a. Brief narrative. b. On-scene point of contact for additional information (name and cell phone number). c. Date and time enrollee became aware of the SSO. d. Name of sanitary sewer system agency causing the SSO. e. SSO cause (if known). v. Indication of whether the SSO has been contained. vi. Indication of whether surface water is impacted. vii. Name of surface water impacted by the SSO, if applicable. viii. Indication of whether a drinking water supply is or may be impacted by the SSO. ix. Any other known SSO impacts. x. SSO incident location (address, city, state, and zip code).

	(6) continued 3. Following the initial notification to Cal OES and until such time that an enrollee certifies the SSO report in the CIWQS Online SSO Database, the enrollee shall provide updates to Cal OES regarding substantial changes to the estimated volume of untreated or partially treated sewage discharged and any substantial change(s) to known impact(s). 4. PLSDs: The enrollee is strongly encouraged to notify Cal OES of discharges greater than or equal to 1,000 gallons of untreated or partially treated wastewater that result or may result in a discharge to surface water resulting from failures or flow conditions within a privately owned sewer lateral or from other private sewer asset(s) if the enrollee becomes aware of the PLSD.

C. REPORTING REQUIREMENTS

1. **CIWQS Online SSO Database Account:** All enrollees shall obtain a CIWQS Online SSO Database account and receive a "Username" and "Password" by registering through CIWQS. These accounts allow controlled and secure entry into the CIWQS Online SSO Database.

2. **SSO Mandatory Reporting Information:** For reporting purposes, if one SSO event results in multiple appearance points in a sewer system asset, the enrollee shall complete one SSO report in the CIWQS Online SSO Database which includes the GPS coordinates for the location of the SSO appearance point closest to the failure point, blockage or location of the flow condition that caused the SSO, and provide descriptions of the locations of all other discharge points associated with the SSO event.

3. **SSO Categories**

   i. **Category 1** – Discharges of untreated or partially treated wastewater of any volume resulting from an enrollee's sanitary sewer system failure or flow condition that:

      a. Reach surface water and/or reach a drainage channel tributary to a surface water; or

      b. Reach a MS4 and are not fully captured and returned to the sanitary sewer system or not otherwise captured and disposed of properly. Any volume of wastewater not recovered from the MS4 is considered to have reached surface water unless the storm drain system discharges to a dedicated storm water or groundwater infiltration basin (e.g., infiltration pit, percolation pond).

   ii. **Category 2** – Discharges of untreated or partially treated wastewater greater than or equal to 1,000 gallons resulting from an enrollee's sanitary sewer system failure or flow condition that does not reach a surface water, a drainage channel, or the MS4 unless the entire SSO volume discharged to the storm drain system is fully recovered and disposed of properly.

   iii. **Category 3** – All other discharges of untreated or partially treated wastewater resulting from an enrollee's sanitary sewer system failure or flow condition.

4. **Sanitary Sewer Overflow Reporting to CIWQS - Timeframes**

   i. **Category 1 and Category 2 SSOs** – All SSOs that meet the above criteria for Category 1 or Category 2 SSOs shall be reported to the CIWQS Online SSO Database:

      a. Draft reports for Category 1 and Category 2 SSOs shall be submitted to the CIWQS Online SSO Database within three (3) business days of the enrollee becoming aware of the SSO. Minimum information that shall be reported in a draft Category 1 SSO report shall include all information identified in section 8.i.a. below. Minimum information that shall be reported in a Category 2 SSO draft report shall include all information identified in section 8.i.c below.

      b. A final Category 1 or Category 2 SSO report shall be certified through the CIWQS Online SSO Database within 15 calendar days of the end date of the SSO. Minimum information that shall be certified in the final Category 1 SSO report shall include all information identified in section 8.i.b below. Minimum information that shall be certified in a final Category 2 SSO report shall include all information identified in section 8.i.d below.

ii. **Category 3 SSOs –** All SSOs that meet the above criteria for Category 3 SSOs shall be reported to the CIWQS Online SSO Database and certified within 30 calendar days after the end of the calendar month in which the SSO occurs (e.g., all Category 3 SSOs occurring in the month of February shall be entered into the database and certified by March 30). Minimum information that shall be certified in a final Category 3 SSO report shall include all information identified in section 8.i.e below.

iii. **"No Spill" Certification –** If there are no SSOs during the calendar month, the enrollee shall either 1) certify, within 30 calendar days after the end of each calendar month, a "No Spill" certification statement in the CIWQS Online SSO Database certifying that there were no SSOs for the designated month, or 2) certify, quarterly within 30 calendar days after the end of each quarter, "No Spill" certification statements in the CIWQS Online SSO Database certifying that there were no SSOs for each month in the quarter being reported on. For quarterly reporting, the quarters are Q1 - January/ February/ March, Q2 - April/May/June, Q3 - July/August/September, and Q4 - October/November/December.

If there are no SSOs during a calendar month but the enrollee reported a PLSD, the enrollee shall still certify a "No Spill" certification statement for that month.

iv. **Amended SSO Reports –** The enrollee may update or add additional information to a certified SSO report within 120 calendar days after the SSO end date by amending the report or by adding an attachment to the SSO report in the CIWQS Online SSO Database. SSO reports certified in the CIWQS Online SSO Database prior to the adoption date of this MRP may only be amended up to 120 days after the effective date of this MRP. After 120 days, the enrollee may contact the SSO Program Manager to request to amend an SSO report if the enrollee also submits justification for why the additional information was not available prior to the end of the 120 days.

5. **SSO Technical Report**

The enrollee shall submit an SSO Technical Report in the CIWQS Online SSO Database within 45 calendar days of the SSO end date for any SSO in which 50,000 gallons or greater are spilled to surface waters. This report, which does not preclude the Water Boards from requiring more detailed analyses if requested, shall include at a minimum, the following:

i. **Causes and Circumstances of the SSO:**

a. Complete and detailed explanation of how and when the SSO was discovered.

b. Diagram showing the SSO failure point, appearance point(s), and final destination(s).

c. Detailed description of the methodology employed and available data used to calculate the volume of the SSO and, if applicable, the SSO volume recovered.

d. Detailed description of the cause(s) of the SSO.

e. Copies of original field crew records used to document the SSO.

f. Historical maintenance records for the failure location.

ii. **Enrollee's Response to SSO:**

a. Chronological narrative description of all actions taken by enrollee to terminate the spill.

b. Explanation of how the SSMP Overflow Emergency Response plan was implemented to respond to and mitigate the SSO.

c. Final corrective action(s) completed and/or planned to be completed, including a schedule for actions not yet completed.

iii. **Water Quality Monitoring:**

a. Description of all water quality sampling activities conducted including analytical results and evaluation of the results.

b. Detailed location map illustrating all water quality sampling points.

6. **PLSDs**

Discharges of untreated or partially treated wastewater resulting from blockages or other problems within a privately owned sewer lateral connected to the enrollee's sanitary sewer system or from other private sanitary sewer system assets may be voluntarily reported to the CIWQS Online SSO Database.

i. The enrollee is also encouraged to provide notification to Cal OES per section B above when a PLSD greater than or equal to 1,000 gallons has or may result in a discharge to surface water. For any PLSD greater than or equal to 1,000 gallons regardless of the spill destination, the enrollee is also encouraged to file a spill report as required by Health and Safety Code section 5410 et. seq. and Water Code section 13271, or notify the responsible party that notification and reporting should be completed as specified above and required by State law.

ii. If a PLSD is recorded in the CIWQS Online SSO Database, the enrollee must identify the sewage discharge as occurring and caused by a private sanitary sewer system asset and should identify a responsible party (other than the enrollee), if known. Certification of PLSD reports by enrollees is not required.

7. **CIWQS Online SSO Database Unavailability**

In the event that the CIWQS Online SSO Database is not available, the enrollee must fax or e-mail all required information to the appropriate Regional Water Board office in accordance with the time schedules identified herein. In such event, the enrollee must also enter all required information into the CIWQS Online SSO Database when the database becomes available.

8. **Mandatory Information to be Included in CIWQS Online SSO Reporting**

All enrollees shall obtain a CIWQS Online SSO Database account and receive a "Username" and "Password" by registering through CIWQS which can be reached at CIWQS@waterboards.ca.gov or by calling (866) 792-4977, M-F, 8 A.M. to 5 P.M. These accounts will allow controlled and secure entry into the CIWQS Online SSO Database. Additionally, within thirty (30) days of initial enrollment and prior to recording SSOs into the CIWQS Online SSO Database, all enrollees must complete a Collection System Questionnaire (Questionnaire). The Questionnaire shall be updated at least once every 12 months.

i. **SSO Reports**

At a minimum, the following mandatory information shall be reported prior to finalizing and certifying an SSO report for each category of SSO:

a. **Draft Category 1 SSOs**: At a minimum, the following mandatory information shall be reported for a draft Category 1 SSO report:

1. SSO Contact Information: Name and telephone number of enrollee contact person who can answer specific questions about the SSO being reported.
2. SSO Location Name.
3. Location of the overflow event (SSO) by entering GPS coordinates. If a single overflow event results in multiple appearance points, provide GPS coordinates for the appearance point closest to the failure point and describe each additional appearance point in the SSO appearance point explanation field.
4. Whether or not the SSO reached surface water, a drainage channel, or entered and was discharged from a drainage structure.
5. Whether or not the SSO reached a municipal separate storm drain system.
6. Whether or not the total SSO volume that reached a municipal separate storm drain system was fully recovered.
7. Estimate of the SSO volume, inclusive of all discharge point(s).
8. Estimate of the SSO volume that reached surface water, a drainage channel, or was not recovered from a storm drain.
9. Estimate of the SSO volume recovered (if applicable).
10. Number of SSO appearance point(s).
11. Description and location of SSO appearance point(s). If a single sanitary sewer system failure results in multiple SSO appearance points, each appearance point must be described.
12. SSO start date and time.
13. Date and time the enrollee was notified of, or self-discovered, the SSO.
14. Estimated operator arrival time.
15. For spills greater than or equal to 1,000 gallons, the date and time Cal OES was called.
16. For spills greater than or equal to 1,000 gallons, the Cal OES control number.

b. **Certified Category 1 SSOs**: At a minimum, the following mandatory information shall be reported for a certified Category 1 SSO report, in addition to all fields in section 8.i.a :

1. Description of SSO destination(s).
2. SSO end date and time.
3. SSO causes (mainline blockage, roots, etc.).
4. SSO failure point (main, lateral, etc.).
5. Whether or not the spill was associated with a storm event.
6. Description of spill corrective action, including steps planned or taken to reduce, eliminate, and prevent reoccurrence of the overflow; and a schedule of major milestones for those steps.
7. Description of spill response activities.
8. Spill response completion date.
9. Whether or not there is an ongoing investigation, the reasons for the investigation and the expected date of completion.

10. Whether or not a beach closure occurred or may have occurred as a result of the SSO.
11. Whether or not health warnings were posted as a result of the SSO.
12. Name of beach(es) closed and/or impacted. If no beach was impacted, NA shall be selected.
13. Name of surface water(s) impacted.
14. If water quality samples were collected, identify parameters the water quality samples were analyzed for. If no samples were taken, NA shall be selected.
15. If water quality samples were taken, identify which regulatory agencies received sample results (if applicable). If no samples were taken, NA shall be selected.
16. Description of methodology(ies) and type of data relied upon for estimations of the SSO volume discharged and recovered.
17. SSO Certification: Upon SSO Certification, the CIWQS Online SSO Database will issue a final SSO identification (ID) number.

c. **Draft Category 2 SSOs**: At a minimum, the following mandatory information shall be reported for a draft Category 2 SSO report:

   1. Items 1-14 in section 8.i.a above for Draft Category 1 SSO.

d. **Certified Category 2 SSOs**: At a minimum, the following mandatory information shall be reported for a certified Category 2 SSO report:

   1. Items 1-14 in section 8.i.a above for Draft Category 1 SSO and Items 1-9, and 17 in section 8.i.b above for Certified Category 1 SSO.

e. **Certified Category 3 SSOs**: At a minimum, the following mandatory information shall be reported for a certified Category 3 SSO report:

   1. Items 1-14 in section 8.i.a above for Draft Category 1 SSO and Items 1-6, and 17 in section 8.i.b above for Certified Category 1 SSO.

ii. **Reporting SSOs to Other Regulatory Agencies**

These reporting requirements do not preclude an enrollee from reporting SSOs to other regulatory agencies pursuant to state law. In addition, these reporting requirements do not replace other Regional Water Board notification and reporting requirements for SSOs.

iii. **Collection System Questionnaire**

The required Questionnaire (see subsection G of the SSS WDRs) provides the Water Boards with site-specific information related to the enrollee's sanitary sewer system. The enrollee shall complete and certify the Questionnaire at least every 12 months to facilitate program implementation, compliance assessment, and enforcement response.

iv. **SSMP Availability**

The enrollee shall provide the publicly available internet web site address to the CIWQS Online SSO Database where a downloadable copy of the enrollee's approved SSMP, critical supporting documents referenced in the SSMP, and proof of local governing board approval of the SSMP is posted. If all of the SSMP documentation listed in this subsection is not publicly available on the Internet, the enrollee shall comply with the following procedure:

a. Submit an **electronic** copy of the enrollee's approved SSMP, critical supporting documents referenced in the SSMP, and proof of local governing board approval of the SSMP to the State Water Board, within 30 days of that approval and within 30 days of any subsequent SSMP re-certifications, to the following mailing address:

State Water Resources Control Board
Division of Water Quality
Attn: SSO Program Manager
1001 I Street, 15th Floor, Sacramento, CA 95814

D. WATER QUALITY MONITORING REQUIREMENTS:

To comply with subsection D.7(v) of the SSS WDRs, the enrollee shall develop and implement an SSO Water Quality Monitoring Program to assess impacts from SSOs to surface waters in which 50,000 gallons or greater are spilled to surface waters. The SSO Water Quality Monitoring Program, shall, at a minimum:

1. Contain protocols for water quality monitoring.

2. Account for spill travel time in the surface water and scenarios where monitoring may not be possible (e.g. safety, access restrictions, etc.).

3. Require water quality analyses for ammonia and bacterial indicators to be performed by an accredited or certified laboratory.

4. Require monitoring instruments and devices used to implement the SSO Water Quality Monitoring Program to be properly maintained and calibrated, including any records to document maintenance and calibration, as necessary, to ensure their continued accuracy.

5. Within 48 hours of the enrollee becoming aware of the SSO, require water quality sampling for, at a minimum, the following constituents:

   i. Ammonia

   ii. Appropriate Bacterial indicator(s) per the applicable Basin Plan water quality objective or Regional Board direction which may include total and fecal coliform, enterococcus, and e-coli.

E. RECORD KEEPING REQUIREMENTS:

The following records shall be maintained by the enrollee for a minimum of five (5) years and shall be made available for review by the Water Boards during an onsite inspection or through an information request:

1. General Records: The enrollee shall maintain records to document compliance with all provisions of the SSS WDRs and this MRP for each sanitary sewer system owned including any required records generated by an enrollee's sanitary sewer system contractor(s).

2. SSO Records: The enrollee shall maintain records for each SSO event, including but not limited to:

   i. Complaint records documenting how the enrollee responded to all notifications of possible or actual SSOs, both during and after business hours, including complaints that do not

result in SSOs. Each complaint record shall, at a minimum, include the following information:

a. Date, time, and method of notification.

b. Date and time the complainant or informant first noticed the SSO.

c. Narrative description of the complaint, including any information the caller can provide regarding whether or not the complainant or informant reporting the potential SSO knows if the SSO has reached surface waters, drainage channels or storm drains.

d. Follow-up return contact information for complainant or informant for each complaint received, if not reported anonymously.

e. Final resolution of the complaint.

ii. Records documenting steps and/or remedial actions undertaken by enrollee, using all available information, to comply with section D.7 of the SSS WDRs.

iii. Records documenting how all estimate(s) of volume(s) discharged and, if applicable, volume(s) recovered were calculated.

3. Records documenting all changes made to the SSMP since its last certification indicating when a subsection(s) of the SSMP was changed and/or updated and who authorized the change or update. These records shall be attached to the SSMP.

4. Electronic monitoring records relied upon for documenting SSO events and/or estimating the SSO volume discharged, including, but not limited to records from:

   i. Supervisory Control and Data Acquisition (SCADA) systems

   ii. Alarm system(s)

   iii. Flow monitoring device(s) or other instrument(s) used to estimate wastewater levels, flow rates and/or volumes.

F. CERTIFICATION

1. All information required to be reported into the CIWQS Online SSO Database shall be certified by a person designated as described in subsection J of the SSS WDRs. This designated person is also known as a Legally Responsible Official (LRO). An enrollee may have more than one LRO.

2. Any designated person (i.e. an LRO) shall be registered with the State Water Board to certify reports in accordance with the CIWQS protocols for reporting.

3. Data Submitter (DS): Any enrollee employee or contractor may enter draft data into the CIWQS Online SSO Database on behalf of the enrollee if authorized by the LRO and registered with the State Water Board. However, only LROs may certify reports in CIWQS.

4. The enrollee shall maintain continuous coverage by an LRO. Any change of a registered LRO or DS (e.g., retired staff), including deactivation or a change to the LRO's or DS's contact information, shall be submitted by the enrollee to the State Water Board within 30 days of the change by calling (866) 792-4977 or e-mailing help@ciwqs.waterboards.ca.gov.

5. A registered designated person (i.e., an LRO) shall certify all required reports under penalty of perjury laws of the state as stated in the CIWQS Online SSO Database at the time of certification.

CERTIFICATION

The undersigned Clerk to the Board does hereby certify that the foregoing is a full, true, and correct copy of an order amended by the Executive Director of the State Water Resources Control Board.

7/30/13
Date

Jeanine Townsend
Clerk to the Board

FINAL

CONTINGENCY PLAN
ALVARADO WASTEWATER
TREATMENT PLANT AND PUMPING STATIONS

Prepared for
Union Sanitary District
Union City, California
May 2007

UNION SANITARY DISTRICT

BROWN AND CALDWELL
201 North Civic Drive
Walnut Creek, CA 94596

FINAL

CONTINGENCY PLAN ALVARADO WASTEWATER TREATMENT PLANT AND PUMPING STATIONS

Prepared for Union Sanitary District
Union City, California
May 2007

TABLE OF CONTENTS

LIST OF TABLES IV

LIST OF ACRONYMS IV

1. INTRODUCTION 1-1
   - Purpose 1-1
   - Scope 1-1
   - Description of Facilities 1-1

2. STAFFING CONTINGENCIES 2-1
   - Illness and Injury Prevention 2-1
   - District Work Stoppages 2-1
   - Outside Work Stoppages 2-1

3. MAINTENANCE OF ADEQUATE CHEMICALS, SUPPLIES AND SPARE PARTS 3-1
   - Chemical Supply 3-1
   - Emergency Equipment Inventory 3-1
   - Spare Parts 3-2

4. EMERGENCY STANDBY POWER 4-1
   - Remote Pump/Lift Stations Standby Power 4-1
   - Alvarado Pump Station Standby Power 4-1
   - Alvarado Treatment Plant Standby Power 4-2
   - On-Site Power Generation 4-2

5. PROTECTIONS AGAINST VANDALISM 5-1
   - Treatment Plant 5-1
   - Pump Stations 5-1
   - Force Mains 5-1
   - Internet Security 5-1

6. EXPEDITIOUS ACTIONS TO REPAIR FAILURES/DAMAGE 6-1
   - Treatment Plant and Pump Station Equipment 6-1
   - Sewer Line Repair 6-1
   - Force Mains Action Plans 6-1
   - EBDA Effluent Force Mains 6-2

7. SPILLS AND DISCHARGES OF UNTREATED OR INADEQUATELY TREATED WASTE 7–1
   - Interagency Coordination 7–1
   - Toxic Storage and Containment 7–1
   - Toxic Discharges 7–2
   - Notification of Waste Discharges 7–2
   - Storage and Testing of Waste 7–2
   - Treatment or Disposal of Wastes 7–2

8. PROGRAMS FOR MAINTENANCE, REPLACEMENT AND SURVEILLANCE 8-1
Equipment 8-1
Facilities 8-1

9. EMERGENCY RESPONSE AND DISASTER PREPAREDNESS 9-1

APPENDIX A ..... A
USD Policy No 7050 - Injury and Illness Prevention ..... A

APPENDIX B ..... B
USD Policy No 1100 – Emergency Response Procedure ..... B

APPENDIX C C
SOP-PO103-9 – Restart Pump Stations C

APPENDIX D ..... D
SOP-114-09 Restart Plant Equipment after a Power Failure ..... D

APPENDIX E ..... E
USD Policy No 2100 Information System Security Policy ..... E

APPENDIX F ..... F
TPO On-call Schedule ..... F

APPENDIX G ..... G
FMC On-call Schedule ..... G

APPENDIX H ..... H
Collection Services On-Call Schedule ..... H

APPENDIX I I
USD POLICY No 7045 Response to Unusual Wastewater Characteristics I

APPENDIX J ..... J
USD POLICY No 7245 Hazardous Material Communication Program ..... J

APPENDIX K ..... K
USD POLICY __ Hazard Material / Waste Management and Incident Spill Response Plan ..... K

LIST OF TABLES

Table 2-1. USD Certified Operators Other Than Plant Operators 2-1
Table 3-1. Chemical Storage at USD 3-1
Table 4-1. USD Remote Pump Station Emergency Standby Power 4-1
Table 4-2. On-site Power Generation Capacity 4-2
Table 4-3. Plant Fuel Storage 4-2

LIST OF ACRONYMS

ACWD	Alameda County Water District
BC	Brown and Caldwell
CIP	Capital Improvement Program
CMMS	Computerized Maintenance Management System
CS	Collection Services
EBDA	East Bay Dischargers Authority
ERP	Emergency Response Plan/Emergency Response Procedure
ET	Executive Team
FMC	Fabrication Maintenance & Construction
JCR	Job Competency Requirements
MGD	Million Gallons per Day
O&M	Operation and Maintenance
PM	Preventive Maintenance
PPE	Personal Protective Equipment
RWQCB	Regional Water Quality Control Board
SA	Standard Answers
SCADA	Supervisory Control and Data Acquisition
SEMS	Standardized Emergency Management System
SOP	Standard Operating Procedure
SSO	Sanitary Sewer Overflow
T&D	Treatment and Disposal
TC	Team Coordinator
TESA	Tri-Cities Emergency Services Association
TPO	Total Productive Operations
USD	Union Sanitary District (Also referred as District)
WO	Work Orders

USD CONTINGENCY PLAN FOR ALVARADO WASTEWATER TREATMENT PLANT AND PUMPING STATIONS

1. INTRODUCTION

Purpose

This Contingency Plan covers facilities owned and operated by Union Sanitary District (USD), a public agency. It addresses the requirements of Provisions VI .C.5.c, Order No. R2-2006-0053, NPDES No. CA0037869 of the California Regional Water Quality Control Board (RWQCB) Region 2, San Francisco Bay Region and the discharge permit for member agencies of the East Bay Dischargers Authority (EBDA). It also includes elements to satisfy Section E.5, Spill Prevention Contingency Plans of the Standard Provisions and Reporting Requirements dated August 1993.

The Contingency Plan was originally prepared by Dan Cortinovis, an independent Consulting Engineer in 1998. The plan was further revised and updated in April 2007 by Brown and Caldwell (BC), an environmental engineering and consulting company.

Scope

The scope of this contingency plan is to provide the following information:

- Provision of personnel for continued operation and maintenance of sewerage facilities during employee strikes or strikes against contractors providing services.
- Maintenance of adequate chemicals or other supplies and spare parts necessary for continued operation of sewerage facilities.
- Provisions of emergency standby power.
- Protection against vandalism.
- Expeditious action to repair failures of, or damage to, equipment and sewer lines.
- Report of spills and discharges of untreated or inadequately treated wastes including measures taken to clean up the effects of such discharges.
- Programs for maintenance, replacement and surveillance of physical condition of equipment, facilities and sewer lines.

Description of Facilities

USD serves the Cities of Fremont, Newark and Union City with a combined population of approximately 320,000. The Raymond A. Boege Alvarado Wastewater Treatment Plant provides secondary treatment of domestic, industrial and commercial wastewater. Liquid treatment consists of screening, primary sedimentation, activated sludge, secondary clarification and chlorination. Treated wastewater from the facility is transported to EBDA's system where it mixes with treated effluent from other EBDA agencies and is transported to a dechlorination station near the San Leandro Marina. The treated effluent is ultimately transported to EBDA's deepwater outfall in Lower San Francisco Bay. Sludge is thickened, anaerobically digested, dewatered using centrifuges and either land applied or disposed of at an authorized disposal site. Approximately 3 to 5 million gallons per day (MGD) of reclaimed wastewater from USD's treatment facility is delivered to the Hayward Marsh via the EBDA pipeline. Hayward Marsh is operated by the East Bay

Regional Park District. Discharge of treated wastewater from the marsh is regulated by a separate RWQCB Order No. R2-2006-0031, NPDES No. CA 0038636.

The Treatment Plant receives wastewater from three (3) main pump stations, four (4) lift stations and 760 miles of sewer pipes. Irvington Pump Station serves the southern area of the Fremont Basin. The Newark Pump Station serves the central service area of the Newark Basin. The Alvarado Pump Station, located at the treatment plant, serves the northern service area. The Fremont and Boyce Road Lift Stations are tributary to the Irvington Station. The Paseo Padre and Cherry Street Lift Stations are tributary to the Newark Pump Station.

Install High Pressure Plug in Sewage Transport Pipeline (Force Main)

Standard Operating Procedures

UNION SANITARY DISTRICT

SOP-USD510 / MARCH 2012

This Page Intentionally Left Blank

ADMINISTRATIVE

A. Introduction

1. This SOP contains the instructions and steps that District Employees will follow to install a high pressure plug in sewage transport pipeline. All work shall be performed safely in compliance with applicable standards and in a manner that minimizes adverse impacts.
2. The tasks and steps contained in this SOP are the same, regardless of whether you are installing on the suction or discharge points of the line.

B. Cancellation

1. Install High Pressure Plug in Sewage Transport Pipeline (Force Main) SOP-USD510, dated February 2008

C. References

1. Union Sanitary District Policies
2. Plug-It Products Specifications & Safety Manual 2004
   a. Jon Smith, Phone: 800-575-8448
3. SOP-CS105-1 Plugging

D. Objectives

1. Upon Completion the operator will be able to:
   a. Install high pressure pneumatic plugs
   b. Understand the appropriate Personal Protective Equipment required for a plugging operation
   c. Inspect a plug to determine its serviceability
   d. Select appropriate inflation equipment
   e. Determine maximum allowable backpressure
   f. Inspect a pipe for damage prior to installation
   g. Release back pressure

E. Equipment/Personnel Required

1. Excavator

2. Crane
3. Trench Box
4. High Pressure Plugs
5. Steel Plates
    a. 10’ X 5’
6. L Brackets
7. Plug Installation Device
8. Air Hoses
9. Manifolds with gauges
10. Compressed Air Tank
11. Welding Equipment
12. Four CS/FMC employees
    a. One qualified excavator operator
    b. One crane operator

F. <u>Terminology</u>

1. NOTE is used when information is available that can assist the Operator in accomplishing his or her task. Information is advisory in nature.
2. CAUTION is used when special cautions must be taken by the Operator. Failure to following prescribed steps may cause serious bodily injury and damage equipment.
3. WARNING is used when special cautions must be taken by the Operator. Failure to follow prescribed steps will cause loss of life or limb and severely damage equipment.

PROCEDURES

1. Install High Pressure Plug in Sewage Transport Pipeline (Force Main)

1.1 Preparations

Step 1: Discuss alternatives and possible impacts of plugging

Step 2: Check for holes in the pipe, broken edges of a pipe section, or anything else that could compromise the physical integrity of a plug.

- A section of pipe has been removed to expose the end of the pipe to be plugged.

Step 3: Determine line size and select the appropriate size of plug. There are two 33" and two 39" high pressure plugs.

> **NOTE**
>
> High pressure plugs are inflated to 150 PSI. They have a maximum back pressure rating of 100 PSI. The force main pressure can reach a maximum of 70 PSI.

Step 4: Inspect the body of the plug for leaks, wear, cuts, cracks and ultraviolet or chemical checking, damaged or missing hardware, missing or damaged air relief valves

Step 5: Inspect air line(s) and fittings for leaks, wear, cuts, holes or valve core damage.

> **NOTE**
>
> An air pressure maintenance cylinder and hose assembly is used to maintain the full air pressure in the plug. The cylinder is a high pressure tank on a cart with a pressure regulator and hose. The regulator has two gauges, one shows the tank pressure and the other gauge shows the pressure down stream of the regulator. The regulator is used to reduce the tank pressure to the correct pressure for the plug.

WARNING

The air maintenance cylinder contains air under high pressure. Use precautions for high pressure gases. The primary hazard with the tank is the rapid release of pressure in the event that the tank valve is knocked off. A rapid uncontrolled release of pressure can cause the cylinder to become a projectile. When the cylinder is transported, the regulator must be removed and the safety cap installed on the cylinder to protect the tank valve. The cylinder must be secured when transported and on the job site by tying it down with rope or other means. The tank can be horizontal or vertical during transport and on the job site. The cylinder is filled with air so the gas is not flammable or toxic. Eye protection must be worn when handling the air maintenance cylinder.

Step 6: Inspect attachment points on the plug for damaged welds or other indications of failure

Step 7: Set up job site; follow WATCH traffic control handbook and standard safety precautions, if necessary

NOTE

The high pressure plugs are 290lbs. (33”) and 375lbs (39”), so they must be moved with the excavator or crane on site. A lifting fixture is used to rig the plugs from the excavator or crane on site.

Step 8: Task Complete

1.2 High Pressure Pneumatic Plug Installation

WARNING

Follow confined space entry procedures in USD Policy #8600 at all times when confined space entries are required. Follow "SOP-CS21508" Trench Shoring and Rescue" procedures when entering the excavation.

NOTE

The following is a link to a Powerpoint presentation showing how to install a HP Plug into a force main.

\\portal\DavWWWRoot\TFAP\TRNGMOD\Training Library\Master\District Wide (USD)\Course Material\CURR-USD100 By-Pass Pumping\Powerpoint\PPT-USD100-1 Force Main ByPass.pptx

Step 1: Lower plugs into position using the lifting fixture designed for this purpose. The fixture attaches to the plug and can be adjusted to make the plug level for insertion into the pipe. The fixture is rigged to the excavator or crane on site.

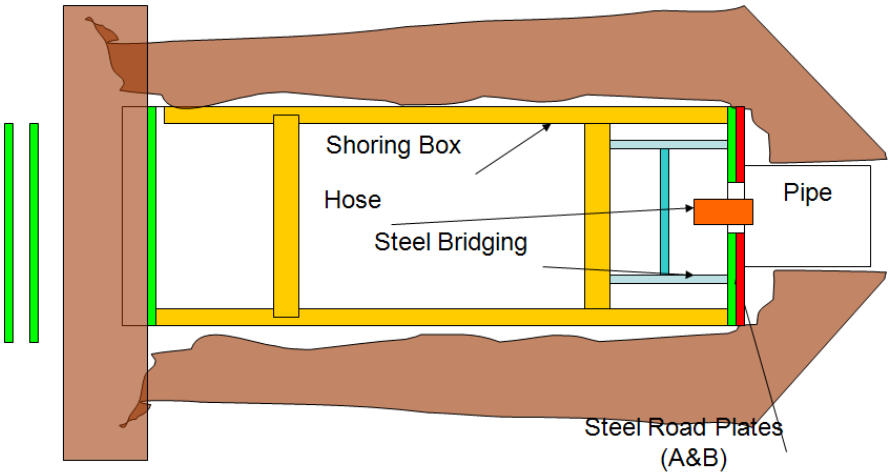

WARNING

Keep the air hose away from the lifting device so they do not become entangled with each other.

Step 2: Install the Pneumatic plug completely into the pipe.

- Head of plug must be no more then 10-12" from the end of the pipe

Step 3: Using the excavator or crane on site, place shoring box into the trench leaving about 3" between the forward face of the shoring box and the end of the pipe.

NOTE

A plug installation tool is being fabricated by FMC. Upon completion of the fabrication, insert a picture of the finished plug installation tool here and delete this note box.

NOTE

A shoring box and two steel plates marked "A" and "B" are used to shore the trench, brace the plug in position and prevent pipe joints in the force mains from separating when the pipelines are pressurized. The plates are prepped for the application but also require some modification in the field.

Step 4: Using the excavator or crane on site, place shoring box into the trench leaving about 3 inches between the end of the shoring box and the end of the pipe

Step 5: Using the excavator or crane install plate "A" against the end of the pipe so that it will bear against the pipe and shoring box. With an oxy-acetylene torch cut a U-shaped hole in the plate to allow the bypass hose to pass from the plug into the shoring box.

Step 6: Cut a hole in plate B to allow the 12" bypass hose to pass from the plug into the shoring box. The hole should line up with the cam-lock fitting in the plug. It should be about 24" in diameter to allow for attaching the hose to the cam-lock fitting.

Step 7: Install plate B on the shoring box side of plate A. Plate B fits inside the shoring box flush with the end of the box. Weld 4 L-shaped brackets to the plate and the inside wall of the shoring box to secure the plate.

Step 8: Brace the plug with screw jacks between plate A and the metal frame of the plug in case the plug slips out of position.

WARNING

Do not begin inflation until all personnel have safely exited the manhole or structure and are out of the Danger Zone. The Danger Zone is the cone shaped area in front of the pipe or top of the manhole which expands in a conical shape as it moves upward and away from the structure or pipe.

Step 9: Inflate the plug to 150 PSI.

Step 10: Secure the air hose

Step 11: Set up the air maintenance cylinder and gauges. Adjust the air pressure regulator to send 150 PSI to the plug.

Step 12: Have all personnel exit the immediate area in front of the plug while inflating the plug.

Step 13: Attach the air pressure maintenance system to the plug air hose.

Step 14: Secure the area around the plug with appropriate traffic control devices.

Step 15: Task Complete

1.3 Monitor the plug air pressure regularly

Step 1: The plugs are to be checked daily to make sure the air pressure is maintained at 150 PSI.

Step 2: The air maintenance cylinder pressure is to be checked daily. A falling reading indicates that there is a leak in the plug, hose, fittings or other component of the air maintenance equipment.

1.4 Removal of the plugs

WARNING

Prior to deflating plugs or disconnecting hoses, verify with the FMC Pump Station Mechanic or a designated invidual that the line containing the plug is off line and dewatered. All appropriate pumps and valves must be locked and tagged out prior to completing this task.

Step 1: Attach the high pressure plug lifting fixture to the plug and rig to excavator or crane on site.

Step 2: Deflate the plug by draining air pressure.

Step 3: Disconnect air lines to plug

Step 4: Remove the plug

1.5 Clean up and store plugs

Step 1: Wash the plugs down to remove debris and grease.

- Use warm water and mild soap

Step 2: Inspect plugs for damage.

Step 3: Store the plugs so they are protected from sunlight.

Step 4: Task Complete

Emergency Bypass Inventory

12” HDPE PIPE & FITTINGS

SIZE	STICK LENGTH	TOTAL LENGTH
12”	20’	1140’
12”	10’	50’
12”	6’	30’

*All pipe has Bauer fittings

12” Fittings:

3	12”	HDPE long sweep 90˚ with male/female Bauer fittings
1	12”	HDPE long sweep 45˚ with male/female Bauer fittings
4	12”	90˚ bend Bauer fitting male/female
4	12”	45˚ bend Bauer fitting male/female
4	12”	Bauer female x flange adapter
2	12”	Bauer male x flange adapter
3	12”	Bauer male x 6” female threaded reducer
2		ARV’s for HDPE pipe (4” connection)
1		12”x 24”x 4” steel Tee with male/female Bauer fittings

6” ALUMINUM PIPE & FITTINGS

SIZE	STICK LENGTH	TOTAL LENGTH
6”	20’	960’
6”	10’	20’
6”	5’	10’

*All pipe has camlock fittings

6” Alum. Fittings:

2	6”	long sweep 90˚
8	6”	90˚ with M x F camlock
9	6”	45˚ with M x F camlock
4	6”	strainers

Emergency Bypass Inventory

4” Alum. Fittings:

2	4”	90˚ with M x F camlock
2	4”	45˚ with M x F camlock
1	4”	Bauer female x flange
1	4”	Bauer female x camlock male

3” Alum. Fittings:

1	3”	camlock male x flange
1	3”	camlock female x flange

HOSE IN CS AREA 2” to 12”

	SIZE	LENGTH	TYPE
1	12”	15’	Suction hose
1	12”	12’	Suction hose
1	12”	8’	Suction hose
2	6”	5’	Suction hose
1	6”	6’	Suction hose
3	4”	20’	Suction hose
3	2”	20’	Suction hose
4	6”	25’	Discharge hose
2	6”	50’	Discharge hose
4	4”	50’	Discharge hose
3	3”	25’	Discharge hose

C/S HOSE REEL TRAILER – T4270

SIZE	LENGTH	TYPE
6”	1200’	Discharge hose

Emergency Bypass Inventory

HOSE LOCATED AT PLANT 3” to 6”

	SIZE	LENGTH	TYPE
1	8”	25’	Suction hose
19	6”	20’	Suction hose
8	3”	20’	Suction hose
18	6”	25’	Discharge hose
3	4”	50’	Discharge hose
3	3”	25’	Discharge hose

TRAFFIC RAMPS

2 6’ x 15’ traffic path

TRAILER MOUNTED PUMPS

Equip.#	SIZE	BRAND	NOTES
E5287	10”	Gorman-Rupp	10” strainer
E5371	6”	Godwin	
E5374	6”	Godwin	
E5352	4”	Godwin	Dri-prime, no strainer
E5381	4”	Godwin	

Updated: 09-16-19 SN

Sewer System Management Plan (SSMP)

Prevention of Recurring FOG-related SSO's & Main Line Stoppages (MLS)

All SSO's and MLS's are investigated for cause. If FOG is determined to be the cause, the Environmental Compliance Team is notified and their FOG Inspector follows up with Source Control. Further, the sewer mains' Cleaning Schedule is adjusted in frequency and method of cleaning to prevent recurrence.

FOG Program

The District's Fats, Oils, and Grease Program has been in operation since mid-July 2005. During the fiscal year 2018-2019, approximately 668 inspections, including re-inspections, were performed. During this period, the program has identified "hot spot" restaurant/commercial areas, which, due to their location and proximity to residential areas, may become potential Sanitary Sewer Overflow (SSO) sites. For the fiscal year 2018-2019, Union Sanitary District had two sanitary sewer overflows. USD Pollution Prevention program personnel work closely with Collections Crews to identify potential "hot spots" and track those areas for more frequent sewer cleaning service and surveillance. Facilities in "hot spots" are also evaluated to determine if possible plumbing connection or hydraulic loading of their grease removal devices might be contributing to the problems of that area. Facilities found to have unapproved connections to grease removal devices are required to make plumbing changes to come into compliance with the FOG Ordinance. Facilities that have inadequate grease removal devices in "hot spots" have been required to install adequately sized grease removal devices to come into compliance with the FOG Ordinance. USD Collections Crews are videoing known problem areas in our main lines, to help determine which restaurants are the biggest contributors/dischargers. The information gathered is then given to FOG program personnel for further follow up for enforcement actions when warranted.

Program personnel continue to provide an aggressive pollution prevention/public outreach campaign during scheduled inspections and illicit discharge responses in order to disseminate the FOG program message. The outreach is comprised of on-site consultation with the FOG inspector, distribution of FOG related material reinforcing the grease pollution prevention message, and if necessary, enforcement of the FOG Ordinance in order to bring facilities into compliance with the appropriate rules and regulations. Outreach has been created in languages other than English to better reach the diverse customers in our service area and make our regulations better understood. Outreach to all three cities in Union Sanitary District and the Alameda County Health Department has been conducted to ensure that they understand our requirements for the need for compliance of all food service establishments with Union Sanitary District FOG Ordinance in our service area.

District staff have supported our two local residential FOG collection facilities which have collected over 18,458 lbs. of residential FOG. We have also provided grease scrapers and door hangers to 830 residents sharing best management advice for managing FOG waste in the home.

Through our involvement with BAPPG we have also supported a FOG outreach campaigns in the Spanish speaking community with 119 radio and online streaming spots during the holiday season.

Collection Services
Selective Cleaning Maintenance Program

Selective Cleaning Maintenance Program identifies sewer mains with (hot spots) sags, surcharges, grease deposits, debris, siphons, capacity and velocity problems as well as other maintenance problems. These lines are prone to develop surcharges, stoppages, and overflows.

Lines on the selective cleaning schedule will be cleaned on a 1, 3, 6, 12, 24 or 36 month schedule depending on the severity of the problem. These lines will also be inspected every 84 months during the fiscal year cleaning of sections.

The selective cleaning program is designed to provide needed maintenance to these lines and to monitor the possibility of stoppages.

The selective cleaning program establishes scheduling dates for all lines at 3-month intervals: September 1, December 1, March1, and June 1.

QA/QC – A percentage of lines scheduled for selective cleaning are identified each year. These lines are inspected prior to cleaning and the condition is assessed for schedule accuracy. Schedules are adjusted based on findings to optimize scheduled cleaning frequency.

Collection Services
Selective Cleaning Maintenance Program
Schedule Dates

Frequency (monthly)	All Sections
3, 6, 12, 24, 36 Months	9/1
	12/1
	3/1
	6/1

Created: October 2019

Fats, Oils and Grease Control Ordinance

Ordinance No. 38

May 2004

Table of Contents

Section 1—General Provisions
1.01 Scope and Purpose 1
1.02 Definitions 1

Section 2—Administration
2.01 General Requirements 2
2.02 Use and Maintenance 3
2.03 Inspection and Sampling 4
2.04 Existing Facilities 4

Section 3—Regulations

3.01 Prohibitions 4

Section 4—Enforcement
4.01 Violations, Enforcement, and Penalties 5

Section 5—Exceptions
5.01 Variance Requests 6

Section 6—Severability
6.01 Severability 7

Section 7—Effective Date
7.01 Effective Date 7

Section 1

GENERAL PROVISIONS

1.01 Scope and Purpose

The purpose of this Ordinance is to aid in controlling the introduction and accumulation of fats, oils, and grease into the Union Sanitary District sewer collection and treatment system, thereby reducing the potential for sanitary sewer overflows. The guidelines and requirements of this Ordinance seek to ensure that industrial and commercial establishments do not exceed established discharge limits for animal- and vegetable-based fats, oils and grease or mineral/petroleum-based oils and grease. Users regulated under this Ordinance are also subject to Union Sanitary District Pretreatment Ordinance No. 36 and Technically Based Local Limits.

1.02 Definitions

1. District: Union Sanitary District, Alameda County, California.

2. District Engineer: The General Manager of the District, or his/her designees, including, but not limited to, duly authorized District personnel.

3. User: Any person, business, industry, firm, company, association, society, corporation, or group, including those located outside the jurisdictional limits of Union Sanitary District that discharges wastewater into the sanitary sewer collection system owned, operated and maintained by Union Sanitary District. Users include persons who contribute such wastewater from mobile sources, such as those who discharge hauled wastewater.

4. Fats, Oils, and Grease: Organic polar compounds derived from animal and/or plant sources that contain multiple carbon chain triglyceride molecules. These substances are detectable and measurable using analytical test procedures established in 40 CFR 136, as may be amended from time to time. All such compounds are sometimes referred to herein as “grease.” Throughout this Ordinance document, references to oils and grease are to include mineral/petroleum-based oils and grease.

5. Grease Interceptor, Grease Trap or Grease Removal Device (GRD): Any device, unit, or installation for separating and retaining waterborne fats, oils and greases or grease complexes as well as settleable solids prior to the discharge of wastewaters to the sanitary sewer collection and treatment system. All such installations, whether sub-surface or above ground, regardless of size, including sand and oil/water separators as well as two-compartment sumps, are referred to herein as “Grease Interceptors,” “Interceptors,” or “Grease Removal Devices.”

6. Food Service Establishments: Those establishments primarily engaged in activities of food preparation, food service, or the making available for consumption foodstuffs and that use one or more of the following preparation methods: cooking by frying (all methods), baking (all methods), grilling, sautéing, rotisserie cooking, broiling (all methods), boiling, blanching, roasting, toasting, or poaching. Also included are infrared heating, searing, barbecuing, and any other food preparation activity that produces a heated food product, whether served on or in washable and reusable plates or containers or those of a disposable type.

   For the purpose of this document, Food Service Establishments include those establishments or facilities where foodstuffs are served or prepared for consumption or sale. This includes but is not limited to cold dairy and frozen foodstuffs preparation and serving establishments that prepare or serve drinkable or edible products.

Section 2

ADMINISTRATION

2.01 General Requirements

Grease interceptors are required and installed at the User's expense when such User operates a Food Service Establishment. Grease interceptors and or similar units will also be required and installed at the User's expense at commercial car washes, in commercial trash enclosures, or at other commercial and industrial establishments when they are deemed necessary by the District Engineer for the proper handling of liquid wastes.

The type, design, location and size of a grease interceptor installed by any User shall be determined and approved by the District Engineer. The District Engineer shall also determine which drainage fixtures are to be connected to the interceptor.

No User discharging wastewater to the District's sewer system through a grease removal unit or grease interceptor shall allow wastewater oil and grease concentrations to exceed 300 milligrams per liter of animal- and vegetable-based oils and grease or 100 milligrams per liter of mineral/petroleum-based oils and grease.

All grease interceptors shall be readily and easily accessible for maintenance and cleaning purposes in addition to ensuring accessibility for inspection by District personnel. All such grease interceptors shall be serviced and have accumulated waste content removed as required and stipulated in this Ordinance document.

All Users are required to maintain and update interceptor maintenance records, including waste hauling manifests. These shall be retained by the User for a period of not less than three (3) years and made available for review or duplication upon request by the District.

2.02 Use and Maintenance

Users who are required to install and maintain a grease interceptor, grease trap or any other unit designed to separate and capture settleables or fats, oils or grease of any kind, shall understand, adhere to, and accept the following:

1. By way of any grease interceptor, or similar device, provide sufficient retention time of wastewaters so as to facilitate the separation of oils and grease to the extent that oil and grease concentrations in wastewaters discharged to the sewerage system owned, operated and maintained by Union Sanitary District, do not exceed established discharge limits set by Union Sanitary District as defined in Section 2.01 of this Ordinance document. Such limits, as set by Union Sanitary District, may be more stringent than Federal or State limits.

2. At the User's expense, routine maintenance shall be performed on all facility grease interceptors. All accumulated grease and solids materials shall be removed by a certified waste hauler licensed by the State of California. Such removal of accumulated waste shall be performed on an as-needed basis, but not less than once every ninety (90) calendar days, unless otherwise permitted to do so through a granted variance request issued by the District. "As needed" shall mean as necessary to ensure continued compliance with Union Sanitary District's discharge limits for oil and grease. If it is determined by the District that mainline flow restriction, e.g., a grease blockage or an obstruction, has resulted from the inadequate cleaning or maintenance of a User's grease interceptor, or if in the opinion of the District a need for increased interceptor maintenance frequency exists, the District, at its discretion, may require of a User a minimum routine cleaning frequency of less than ninety (90) days.

3. The District Engineer reserves the right to make determinations of grease interceptor size, adequacy, location and need, based on review of relevant information, including, but not limited to grease interceptor performance, waste stream characteristics, facility location, maintenance needs, and or inspection needs. The aforementioned determinations may or may not conform to Union Sanitary District's general design specifications, construction standards or sizing criteria for grease interceptors or similar devices.

4. The District reserves the right to require repairs to, or replacement of, interceptors and other required grease removal units at the User's expense.

2.03 Inspection and Sampling

District personnel may inspect the facilities of any User required to have a grease interceptor or similar device, to determine whether the requirements set fourth in this Ordinance document are being met. Owners, managers, employees, or any other occupants or operators of facilities where wastewater is generated and discharged to the District's sewerage system through an Interceptor, shall allow District personnel ready access to all areas of the premises, at all reasonable times or during normal hours of operation for the purpose of inspection, sampling, maintenance records review, or the performance of any other job-related duty. The District shall have the right to set up on any User's property devices necessary for conducting wastewater sampling inspection, compliance monitoring and/or metering operations.

2.04 Existing Facilities

If in the opinion of the District Engineer an existing User requires the installation of a grease interceptor or a grease removal device (GRD) for the proper handling of grease-laden wastewaters, the District will provide the User written notification of the requirement which will include a compliance timeline. Failure on the part of a User to install a required interceptor or GRD within the specified time will result in the initiation of enforcement action against the User and may result in the issuance of fines or the termination of service to the sewer system owned by Union Sanitary District.

NOTE: Users required to install outside underground Interceptors will need to obtain a permit from Union Sanitary District. Users required to install indoor grease traps or GRDs may need to obtain approval from the City having jurisdiction over the area in which the User operates. Users are responsible for obtaining all necessary permits before installing a required interceptor or GRD.

Section 3

REGULATIONS

3.01 Prohibitions

1. The dumping or pouring of oil or grease by any User, into any sewer drain connected or otherwise not connected to a grease interceptor or grease removal device is strictly prohibited at any time. This includes but is not limited to oil and grease used in or generated by residential cooking activities. Any User found disposing of oil or grease in this manner may

be held liable for costs associated with any related remedial activities deemed necessary by the District.

2. Non-grease-laden sources of wastewater are NOT allowed to be connected to sewer lines intended for grease interceptor service. This includes but is not limited to plumbing for hand wash sinks, toilets, and urinals. The connection of rainwater and condensate conveyance pipes or gutters to interceptors is also prohibited.

3. No dishwashers or garbage/food grinders are to be connected to drainage pipes conveying wastewater to an interceptor or any other grease removal device unless such connections are required by the District. In the event a User is required by the District to make such a connection, the District will issue the User written notification of the requirement which the User shall retain as evidence of District approval.

4. No User shall alter, modify, or change from original design specifications a required interceptor or any other GRD, unless the manufacturer of the interceptor recommends in writing alterations to improve product efficiency. Plans showing any manufacturer proposed alterations and current design specifications shall be submitted to the District for review. All such recommendations for modifications are subject to approval by Union Sanitary District. Any approved alterations/modifications will be performed at the User's expense. The District is not to be held liable for a non-compliant condition resulting from modifications made to an interceptor.

5. No User shall introduce any additives, including but not limited to enzymes or surfactants acting as grease emulsifiers or degradation agents, into any grease interceptor or GRD, unless prior written approval is obtained from Union Sanitary District. Any User, if having been granted approval by the District to use any of the methods described above for the abatement of grease, shall continue to maintain the interceptor in such a manner that conformance to the grease wastewater discharge limit, (defined in Section 2.01) as measured from the interceptor outlet or sample box, is consistently achieved.

Section 4

ENFORCEMENT

4.01 Violations, Enforcement, and Penalties

1. In the event that a User's grease interceptor or other grease removal device fails a visual or effluent sample analysis inspection, the User shall be given written notice of the non-compliant condition and take immediate

steps to bring the facility Interceptor into compliance. The User is responsible for all associated costs.

2. Failure on the part of any User to maintain continued compliance with any of the requirements set forth in this Ordinance may result in the initiation of enforcement action. Such enforcement action may include, but is not limited to, the issuance of a Warning Letter, Notice of Violation (NOV), Administrative Fine or Abatement Order, as outlined in Sections 6 and 7 of District Ordinance 36. User will also be responsible for cost of enforcement action clarified under Ordinance 36. Failure to respond to corrective measures outlined in any enforcement notice may result in the User's termination of service to the sewer system owned, operated and maintained by Union Sanitary District.

3. If it is determined by the District that a User, due to a past or present non-compliant condition, necessitates maintenance or repairs to the Union Sanitary District sewer system outside of normal scheduled maintenance or repair activities, the User may be liable for all associated maintenance and/or repair costs, including but not limited to vehicle, equipment, and labor costs. A User may also be responsible for all clean-up costs associated with any sewer overflows and spills resulting from the inadequate cleaning, maintenance, or performance of the User's interceptor.

Section 5

EXCEPTIONS

5.01 Variance Requests

1. If because of documented space constraints a User requests an alternative to a District required out-of-building underground grease interceptor, the request for an alternate device and location shall be submitted in writing to the District Engineer. Such variance requests must include detailed plans showing the location of the sanitary sewer main and service lateral in relation to available exterior space outside the building as well as existing plumbing plans at or in a site that uses common plumbing for all services at the site.

2. Variance requests to extend the interceptor minimum cleaning frequency from ninety (90) calendar days to a period of greater duration must be submitted to the District in writing. The User shall clearly state in the variance request the reasons for exemption as well as the User's proposed cleaning schedule. All variance requests must be dated and signed by the User or his/her designee.

The District reserves the right to grant or deny variance requests or revoke any granted variances at its discretion or at any time the requirements set forth in this Ordinance document are not being met by a User.

Section 6

SEVERABILITY

6.01 Severability

If any term of this Ordinance is held by a court of competent jurisdiction to be void or unenforceable, the remainder of this Ordinance remains in full force and effect, as if the unenforceable provision had never been included. If any possible construction of this Ordinance shall be contrary to any law or found unenforceable, then ipso facto such provisions shall automatically be reformed to conform with any law or legal decision.

Section 7

EFFECTIVE DATE

7.01 Effective Date

This Ordinance shall take effect and be in force on August 23, 2004, and shall be entered in the Minutes of the District.

On motion duly made and seconded, this Ordinance was adopted by the following vote on May 24, 2004.

AYES:

NOES:

ABSENT:

Pat Kite
Chairperson, Board of Directors
UNION SANITARY DISTRICT

ATTEST:

Anjali Lathi
Secretary, Board of Directors
UNION SANITARY DISTRICT

Warning!!

Grease

was removed from sewer lines
in your area

Cooking oil and grease stick to the insides of your sewer pipes. Over time, grease buildup can clog the entire sewer line.

Prevent sewer overflows!

Keep fats, oils and greases out of your drains

Turn this over to learn how

Warning!!

Grease

was removed from sewer lines
in your area

Cooking oil and grease stick to the insides of your sewer pipes. Over time, grease buildup can clog the entire sewer line.

Prevent sewer overflows!

Keep fats, oils and greases out of your drains

Turn this over to learn how

Pouring grease or used cooking oil into your sink is prohibited!

DON'T

Don't pour cooking oil, grease or greasy food down the drain.

Don't use hot water and soap to wash grease down the drain! It will cool and harden in the sewer line.

DO

Pour cooled grease into disposable containers or directly into the **garbage if it's solidified.**

Wipe away any residual grease or oil on dishes, pots or pans with a paper towel or rag before washing them.

For more information and disposal sites for large quantities of grease, call:

Union Sanitary District
(510) 477-7500
www.unionsanitary.com

Pouring grease or used cooking oil into your sink is prohibited!

DON'T

Don't pour cooking oil, grease or greasy food down the drain.

Don't use hot water and soap to wash grease down the drain! It will cool and harden in the sewer line.

DO

Pour cooled grease into disposable containers or directly into the **garbage if it's solidified.**

Wipe away any residual grease or oil on dishes, pots or pans with a paper towel or rag before washing them.

For more information and disposal sites for large quantities of grease, call:

Union Sanitary District
(510) 477-7500
www.unionsanitary.com

Section 7
Fats, Oils, and Grease

The District's Fats, Oils, and Grease Program has been in operation since mid-July 2005. During the fiscal year 2018-2019, approximately 668 inspections, including re-inspections, were performed. During this period, the program has identified "hot spot" restaurant/commercial areas, which, due to their location and proximity to residential areas, may become potential Sanitary Sewer Overflow (SSO) sites. For the fiscal year 2018-2019, Union Sanitary District had two sanitary sewer overflows. USD Pollution Prevention program personnel work closely with Collections Crews to identify potential "hot spots" and track those areas for more frequent sewer cleaning service and surveillance. Facilities in "hot spots" are also evaluated to determine if possible plumbing connection or hydraulic loading of their grease removal devices might be contributing to the problems of that area. Facilities found to have unapproved connections to grease removal devices are required to make plumbing changes to come into compliance with the FOG Ordinance. Facilities that have inadequate grease removal devices in "hot spots" have been required to install adequately sized grease removal devices to come into compliance with the FOG Ordinance. USD Collections Crews are videoing known problem areas in our main lines, to help determine which restaurants are the biggest contributors/dischargers. The information gathered is then given to FOG program personnel for further follow up for enforcement actions when warranted.

Program personnel continue to provide an aggressive pollution prevention/public outreach campaign during scheduled inspections and illicit discharge responses in order to disseminate the FOG program message. The outreach is comprised of on-site consultation with the FOG inspector, distribution of FOG related material reinforcing the grease pollution prevention message, and if necessary, enforcement of the FOG Ordinance in order to bring facilities into compliance with the appropriate rules and regulations. Outreach has been created in languages other than English to better reach the diverse customers in our service area and make our regulations better understood. Outreach to all three cities in Union Sanitary District and the Alameda County Health Department has been conducted to ensure that they understand our requirements for the need for compliance of all food service establishments with Union Sanitary District FOG Ordinance in our service area.

District staff have supported our two local residential FOG collection facilities which have collected over 18,458 lbs. of residential FOG. We have also provided grease scrapers and door hangers to 830 residents sharing best management advice for managing FOG waste in the home.

Through our involvement with BAPPG we have also supported a FOG outreach campaigns in the Spanish speaking community with 119 radio and online streaming spots during the holiday season.

Restaurants

The District will continue to implement the FOG program activities at restaurants as previously reported. There were 520 restaurant inspections performed during this period. FOG personnel are currently conducting monitoring at restaurants of their grease removal devices and facilities with compliance issues. The District enforces the animal/vegetable oil and grease discharge limit of 300 mg/L and 90-day minimum routine maintenance frequency of grease removal device by a California licensed certified waste hauler. The monitoring is used as a tool to help USD and the facility to gauge the typical oil, grease and solid discharges from the facility and the appropriate measures that may be used to decrease the discharges such as installing appropriate sized grease removal devices, eliminating prohibited connections, connecting all FOG potential sources or greater utilization of restaurant BMP's.

Residential Program

District staff continues to coordinate with Republic Services, with regard to the residential fats, oils, and grease (FOG) drop-off program, which is extended to residents throughout the tri-cities year-round. Residents may bring used cooking oil and grease to Republic Services' administrative offices for free disposal. The drop-off is announced on USD's and Republic Services' website, Republic Services' on-hold message and in USD's newsletter (please refer to Attachment 4). During the Thanksgiving and Christmas holidays, the District takes out ¼ page newspaper advertisements in the local newspaper to point residents to Republic Services to drop off used cooking oil. Additionally, during Thanksgiving and Christmas holidays, a point of purchase display related to FOG is set up near the turkey deep fryers at Dale Hardware and Home Depot stores in the service area. The display informs customers about FOG issues and directs them to a Republic Services disposal site nearby. Last year residents recycled 18,197 lbs. of grease and we continue to have a recycling location at the Republic Services site.

USD delivered 830 grease scrapers and 229 door hangers to residents in Fremont living near sewer lines requiring more frequent cleaning due to grease buildup. This door hanger is also printed in Spanish and Mandarin. The door hanger can be seen in the attachments. Staff provided approximately 546 grease scrapers to residents at outreach events.

A new campaign has been started for use in print media and on our website (See Attachment No. 16). This is the Cool It, Can It, and Trash It graphic.

The newsletter also offered Tri-City residents a free grease scraper. It is also part of the Pollution Prevention pledge used at district and community events.

The District is using GIS technology to track trends regarding repeated SSO's grease blockage hot spots. This tool helps the District allocate the appropriate resources to address known grease blockage hot spots and prevent occurrences of SSO's.

B.A.P.P.G. Work Group

Union Sanitary District is a member of the **B**ay **A**rea **P**ollution **P**revention **G**roup (B.A.P.P.G.). The B.A.P.P.G work group aired FOG public service announcements on local Univision Spanish radio stations. The public service announcements were targeted for the Spanish speaking audience of the San Francisco Bay Area. The public service announcements were designed to make the listeners aware of the proper disposal of their cooking oil/grease and prevent them from being poured down the sink. The public service announcements aired from November 19th, 2018 through December 30th, 2018 and there was a total of 101 radio and streaming spots.

Table 7-1 highlights FOG pollution prevention activities for this reporting period (please refer to Attachment 2 for the SSMP report).

Figure 7-1 Sanitary Sewer Overflows Through FY 2019

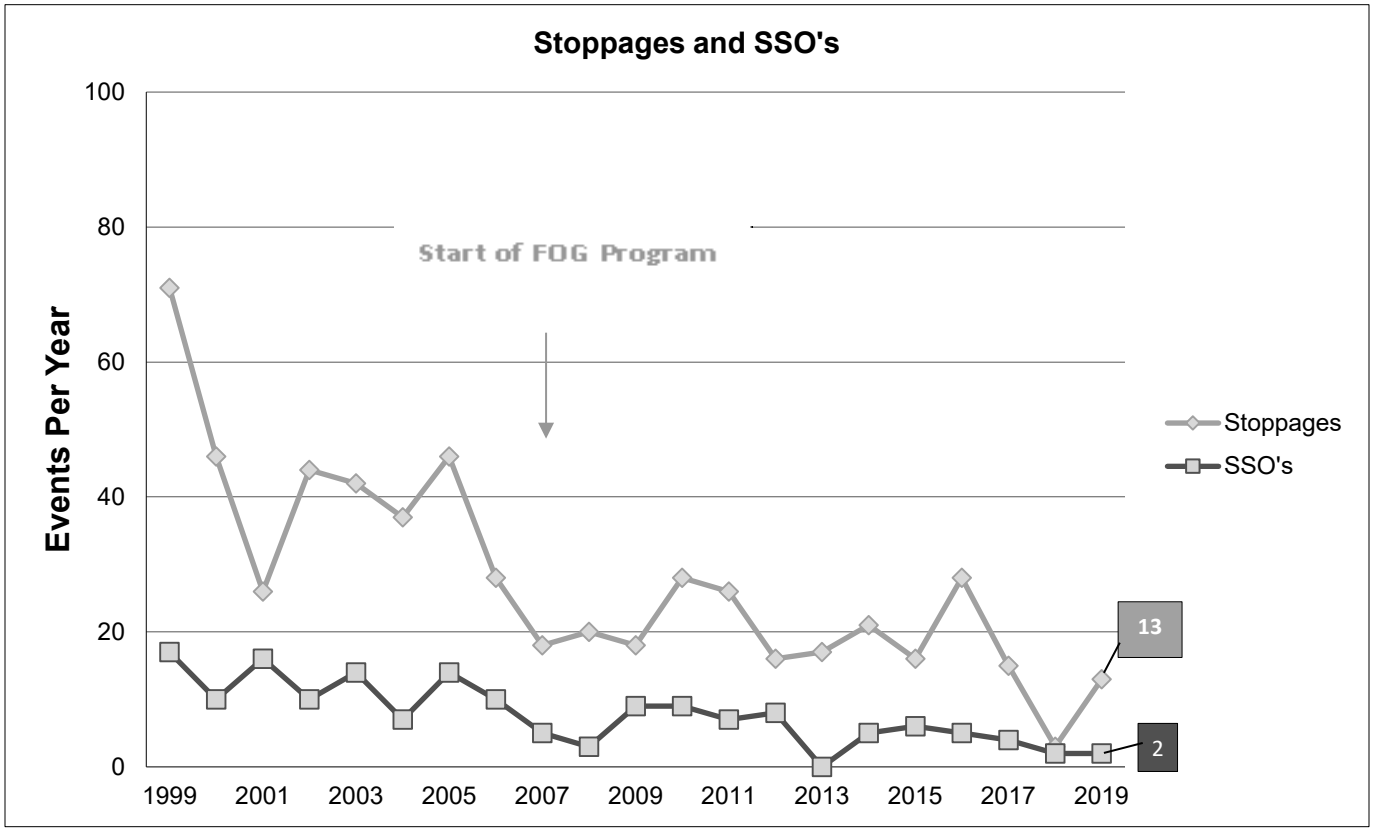

Table 7-1 FOG Pollution Prevention Activities for 2018-2019

Source	Audiences	Message/Program	Implementation Plan & Timeline	Program Results
Restaurants	Restaurant owners/managers	Manage internal activities to minimize FOG introduction to sanitary sewer and service oil separator device regularly.	On-going restaurant inspections.	Increased BMP & ordinance compliance annually and decrease violations and enforcements actions
			BMP posters placed and used at non-compliant restaurants.	Restaurants use BMP poster
			USD information handout available in different languages	Restaurant contacts understand who we are, the reason for inspection, requirement to clean grease removal device and having records available onsite for review
			Find all unapproved connections to grease removal devices	Dishwashers and garbage disposals are disconnected from grease removal devices.
			Find all potential FOG sources and connect them to existing grease removal devices	Potential FOG sources are connected to existing grease removal devices.
			Work closely with the cities of the district and Alameda County Environmental Health to find new restaurants using existing locations and require necessary changes or repairs to the existing grease removal device.	New restaurants have installed, repaired or upgraded missing, damaged or inadequate grease removal devices
			Locating and adding grease interceptors in the District GIS.	Interceptor information and locations are available in GIS
			Perform sludge judging of grease removal devices for animal/vegetable oil, grease and solids percentages.	Restaurants contacts are aware of their haulers cleaning effectiveness and abilities and required services frequency schedule changes

Residents	Homeowners, renters	Determine baseline FOG disposal information.	Distribute grease scrapers and BMPs at events, school outreach presentations.	On-going
		Disseminate information on proper disposal of oils & grease	Support year-round residential drop-off event for FOG.	Track pounds of FOG disposed of at collection event. In 2018-19 5,057 lbs. of cooking oil collected at Republic Services site and 13,140 lbs. collected at Fremont Household Hazardous Waste facility
		Disseminate information on proper disposal of oils & grease in response to SSO	Distribute door hangers and grease scrapers	229 door hangers and 830 grease scrapers shared with residents in Fremont
		Add new messaging to website and for print media– Cool It, Can It, and Trash It	Website updated and new graphic used in print media	Thanksgiving and Christmas ad posted in local paper
		Work with big box stores to display point of sale stickers on turkey fryers	Displayed turkey fryer stickers in Home Depot and Dale Hardware stores throughout District. October - December	100 stickers were displayed on turkey fryers and peanut oil at the 4 stores in the District
BAPPG Work Group	Spanish speaking public radio audience	Dispose cooking oil/grease properly.	November and December	The public service announcements aired from November 19th, 2018 thru December 30th, 2018 and there was a total of 101 radio and streaming spots

Fats, Oils and Grease Pollution Prevention Plan for 2019-2020

USD will continue its FOG pollution prevention program in 2019-2020. The District will track grease blockage hot spots and monitor the effectiveness of line cleaning. District staff will conduct residential outreach to minimize and reduce the development of grease hot spots. The program will also focus on evaluating licensed certified grease haulers cleaning effectiveness and abilities by performing sludge judge monitoring at random restaurants. The Collections System team will continue to work with the FOG pollution prevention program when areas of concerns are discovered. We will continue to focus on restaurant inspections and to support the year-round residential drop-off program. The program will continue to find unapproved connections (dishwashers) to grease removal devices and require plumbing changes to come into compliance with the FOG Ordinance. The program will work more closely with the cities in the district to find out all new restaurants coming into the district and make any necessary changes or repairs to the existing grease removal devices.

The District is continuing its residential FOG campaign with mailers and door hangers. Grease scrapers are given to residents to help keep FOG out of the sanitary sewer. District staff will also work with big box stores to display point of sale stickers for turkey fryers encouraging proper handling of used oil waste.

Figure 7-2 Residential FOG Campaign Mailer with Grease Scraper

Table 7-2 highlights the planned pollution prevention activities for 2019-2020.

The District will continue its pilot Residential outreach campaign targeting hotspot areas to control sanitary sewer overflows.

Table 7-2 FOG Planned Pollution Prevention Activities 2019-2020

Source	Audiences	Message/Program	Implementation Plan & Timeline	Evaluation Method
Restaurants	Restaurant Owners/ Managers	Manage internal activities to minimize FOG introduction to sanitary sewer and service facility oil separation device regularly.	On-going restaurant inspections in Fremont, Union City, Newark	Implementations of BMP's, annual ordinance compliance, violations and enforcements
			BMP posters placed and used at non-compliant restaurants.	Restaurants use BMP poster.
			USD information handout available in different languages	Contacts understand who we are, the reason for inspection, requirement to clean grease removal device and have records onsite
			Restaurant outreach, in coordination with the City of Fremont.	Increased BMP and ordinance compliance annually.
			Find all unapproved connections to grease removal devices	Reduction and elimination of dishwasher and garbage disposal drainage connections to grease removal devices
			Work closely with the cities of the district and Alameda County Environmental Health to find new restaurants and make necessary changes or repairs to the existing grease removal device.	Reduction and elimination of undersized grease removal devices and improved function of existing grease removal devices
			Locating and adding grease interceptors in the District GIS.	Used to track interceptor information and locations throughout the district
			Find all potential FOG sources and connect them to existing grease removal devices.	Reduction and elimination of all potential FOG sources required to be connected to existing grease removal devices
			Perform sludge judging of grease removal devices for animal/vegetable oil, grease and solids percentages.	Evaluate licensed grease haulers cleaning effectiveness and abilities and scheduled service frequency
Residents	Homeowners, renters	Determine proper FOG BMPs.	Distribute grease scrapers and BMPs at events. Support year-round residential drop-off event for FOG.	Track pounds of FOG disposed of at collection event. Door hanger in use in residential areas.

			Distribute grease scrapers and BMPs at events.	Ongoing
		Determine baseline FOG disposal information.	Track the trend of repeated occurrences of blockages at hot spot areas.	Monitor hot spots around high density housing areas
		Work with Collections Department in identifying oil and grease trouble areas (hot spots), track the historical trend of continued blockages, and assess the need for the expenditure of appropriate resources to solve the problem.	Distribute door hangers and residential BMPs at identified areas to educate residents Holiday season October December	Track number of locations canvassed Ongoing
		Create newspaper advertisements to encourage proper FOG disposal	Holiday season October December	Ongoing
		Maintain StopFog webpages on USD website Work with big box stores to display point of sale stickers on turkey fryers and oil	Ongoing	Ongoing
BAPPG Work Group	Spanish speaking public radio audience	Public access PSA's to local radio stations and slides to Public Access Dispose cooking oil/grease properly.	November and December	Ongoing

Sewer System Management Plan (SSMP)

Capacity Management

The District owns and operates the InfoWorks™ Flow Model to assess current and future capacity requirements in the District's collection system. The District completed the Sewer Master Plans for the Irvington Basin in 1995, 2004 and 2015; for the Alvarado Basins in 2007, 2008 and 2017; and for the Newark Basin in 2000, 2012 and 2019.

USD owns a variety of flow monitoring equipment to check peek flows as needed in various pipe sections. When working on the Sewer Master Plans, flow monitoring is conducted at about a dozen locations in each basin of the collections system. The flow data is then used to calibrate the flow model to ensure accuracy of the program. Along with land use information and rain fall data, the Flow Model is then run to assess the capacity requirements in the District's collection system. USD uses the Design Storm criterion of 'a storm with a 10-year recurrence interval'. The capacity deficiencies identified by the flow model are then grouped, prioritized, and, if needed, included in the District's 20-yr CIP budget. This is an ongoing effort.

Sewer System Management Plan (SSMP)

Summary of Master Plans

- 1989 Sewer Master Plan
- 1989 Transport System Master Plan
- 1994 District-Wide Master Plan
- 1995 Irvington Basin Master Plan
- 1997 Alvarado Basin Master Plan
- 1999 Wastewater Equalization Storage Facilities Pre-Design
- 1999 Irvington Raw Wastewater Equalizatiion Storage Facilities Project – Pump Station Feasibility Study
- 2000 Newark Basin Master Plan
- 2001 Irvington Equalization Storage Facilities Project – Bypass Pumping Design
- 2004 Irvington Basin Master Plan Updage
- 2004 Force Main Facility Plan – External Inspection
- 2004 Force Main Facility Plan – Internal Inspection
- 2006 Force Main Facility Emergency Response Plan
- 2008 Sanitary Sewer Hydrogen Sulfide Induced Corrosion Study
- 2008 Force Main Assessment Summary
- 2008 Long-Term Gravity Sewer Renewal/Replacement Projection Summary
- 2008 Alvarado Basin Sewer Master Plan Update
- 2012 Newark Basin Master Plan Update
- 2015 Irvington Sewer Master Plan Update
- 2017 Alvarado Basin Master Plan Update
- 2019 Newark Basin Master Plan Update

Sewer System
Management Plan (SSMP)

Monitoring, Measuring & Program Modifications Reporting

- **2020 USD SSMP 5yr Re-Certification**
- **2018-19 USD SSMP PM Interim Update**
- **May 16, 2016-Sewer System Management Plan 2016 SSMP Audit**
- **April 3, 2014-Sewer System Management Plan 2014 SSMP Audit**
- **March 1, 2012-USD Annual Report of SSO's for Calendar Year 2011 & SSMP Audit**
- **March 1, 2011-USA Annual Report of SSO's for Calendar Year 2010 & SSMP Audit**
- **March 4, 2010-USD Annual Report of SSO's for Calendar Year 2009 & SSMP Audit**
- **March 9, 2009-USD Annual Report of SSO's for Calendar Year 2008 & SSMP Audit**
- **March 6, 2008-USD Annual Report of SSO's for Calendar Year 2007**

CALIFORNIA
Water Boards

EDMUND G. BROWN JR.
GOVERNOR

MATTHEW RODRIQUEZ
SECRETARY FOR
ENVIRONMENTAL PROTECTION

San Francisco Bay Regional Water Quality Control Board

October 3, 2012

To: **Attached Mailing List**

Subject: **Discontinuation of Requirements for Annual Reports of Sanitary Sewer Overflows (SSOs), and Annual Sewer System Management Plan (SSMP) Audits**

This letter notifies you, as an agency or entity that owns or operates a sanitary sewer system in the San Francisco Bay Region enrolled in State Water Board Order No. 2006-0003-DWQ (Sanitary Sewer Order), of the discontinuation of requirements for annual SSO reports, and annual SSMP audit reports.

This discontinuation of requirements is effective immediately. This means there will be no need to submit the annual SSO report and SSMP audit report due in 2013. Furthermore, this discontinuation of requirements effectively rescinds, except for enforcement purposes, the Regional Water Board's Water Code section 13267 orders issued on November 15, 2004, and July 7, 2005.

Please be aware that you are still required to comply with Provision D.13(x) of the Sanitary Sewer Order. Provision D.13(x) requires enrollees, regardless of the population served, to conduct an SSMP internal audit, at a minimum every two years, and prepare an audit report to be kept on file. The Sanitary Sewer Order requires that the audit shall focus on evaluating the effectiveness of the SSMP and the enrollee's compliance with the SSMP requirements identified in Provision D.13, including identification of any deficiencies in the SSMP and steps to correct them. Because of the Regional Water Board's previous more frequent requirement for annual SSMP audit reports and somewhat different submittal schedule compared to the Sanitary Sewer Order, the following reconciles the minimum schedule for the next SSMP audit report to ensure compliance with the Sanitary Sewer Order. Future audits reports would be due two years after the dates listed below.

- If your collection system serves a population greater than 2,500, you must complete your next SSMP internal audit and SSMP Audit Report by **May 2, 2014**. The SSMP internal audit shall cover calendar years 2012 and 2013.
- For collection system serving a population of less than 2,500, the SSMP Audit Report covering calendar years 2012 and 2013 must be completed by **August 2, 2014**.

Please note that if you own and/or operate more than one collection system, you must maintain a separate SSMP audit report on file for each collection system enrolled under the Sanitary Sewer Order.

Please note that the State Water Board is scheduled to consider amendments to the monitoring and reporting program of the Sanitary Sewer Order in early 2013. If adopted as currently drafted, enrollees will be required to include specific information in the SSMP internal audits to satisfy compliance with Provision D.13(x) of the Sanitary Sewer Order. This information would include current and projected SSO reduction performance goals, changes employed to meet target goals, and planned corrective actions to address the top SSO causes. A copy of the proposed amended Monitoring and Reporting Program is available at http://www.waterboards.ca.gov/water_issues/programs/sso/index.shtml.

If you have any questions regarding our SSO Reduction Program requirements or the contents of this letter, please contact Claudia Villacorta, Section Leader, at cvillacorta@waterboards.ca.gov or (510) 622-2485.

Sincerely,

Lila Tang
Chief, Wastewater Division

Attachment: Mailing List

Copy to (by email only):

Ken Greenberg, USEPA Region 9, Greenberg.ken@epa.gov
Russell Norman, State Water Board, Russell.norman@waterboards.ca.gov
Victor Lopez, State Water Board, Lopez.victor@waterboards.ca.gov
Jim Fischer, State Water Board, Fischer.Jim@waterboards.ca.gov

ATTACHMENT: MAILING LIST

LRO* Name	Agency	Street	City	State	Zip
Jesse Barajas	Alameda City	500 Tinker Ave.	Alameda	CA	94501
Richard Cunningham	ALBANY CITY	1000 SAN PABLO AVE	ALBANY	CA	94706
Bonner Beuhler	Almonte SD	P.O. Box 698	Mill Valley	CA	94941
Tom Roberts	Alto Sanitary District	P.O. Box 163	Mill Valley	CA	94941
Michael Throne	AMERICAN CANYON CITY	300 Crawford Way	AMERICAN CANYON	CA	94503
Richard Ables	Ca Dept of Parks & Rec Marin District	PO Box 1016	Novato	CA	94948
Joanne Landi	Bayshore Sanitary District	36 Industrial Way	Brisbane	CA	94005
Karen Borrmann	Belmont	1070 Sixth Avenue	Belmont	CA	94002
Jeff Gregory	Benicia City	250 L Street	BENICIA	CA	94510
Kem Loong	Berkeley City of Public Works	2180 Milvia Street	Berkeley	CA	94704
Randy Breault	Brisbane City	50 Park Place	Brisbane	CA	94005
Donald Toy	Burbank Sanitary District	97 Boston Avenue	San Jose	CA	95128
Jim Brown	Burlingame City	1103 Airport Boulevard	Burlingame	CA	94010
Joshua Cosgrove	Pacifica City	170 Santa Maria Avenue	Pacifica	CA	94044
Donna Placzek	CSU East Bay	25800 Carlos Bee Blvd	Hayward	CA	94542
Dan Takasugi	Calistoga City	414 Washington Street	Calistoga	CA	94515
Roland Williams	Castro Valley Sanitary District	21040 Marshall Street	Castro Valley	CA	94546
Russell Ng	CCSF - San Francisco Airport	P.O. Box 8097	San Francisco	CA	94128
Dante Marchetti	Central Contra Costa Sanitary District	5019 Imhoff Place	Martinez	CA	94553
Darin Fitzpatrick	Concord City	1950 Parkside Dr # 10	Concord	CA	94519
LARRY LIND	Los Altos City	1 N San Antonio Rd	Los Altos	CA	94022
Gregg Hosfeldt	Mountain View City	500 Castro St	Mountain View	CA	95132
Patrick Bowie	Pinole City	2131 Pear Street	Pinole	CA	94564
Hilario Mata	Pittsburg City Attn.: Mr. Walter Pease	65 Civic Avenue	Pittsburg	CA	94565
Jonathan Goldman	Sausalito City	420 Litho Street	Sausilito	CA	94965
James Hardie	South San Francisco City	550 Canal Street P.O. Box 711	South San Francisco	CA	94083
Brad Donohue	Colma Town	1198 El Camino Real	Colma	CA	94014
Susan Cohen	Contra Costa County SD No 6	255 Glacier Drive	Martinez	CA	94533
Steven Machida	County Sanitation Dist #2-3/Cupertino Sanitary District	20833 Stevens Creek Boulevard 104	Cupertino	CA	95014
Joaquin Gonzalez	Delta Diablo Sanitation District	2500 Pittsburg-Antioch Highway	Antioch	CA	94509
Levi Fuller	DUBLIN SAN RAMON SERVICES DISTRICT (WWTP NPDES	7399 Johnson Drive	Pleasanton	CA	94588
HERMAN THOMPSON	East Palo Alto Sanitary Dist.	P.O. Box 51686	Palo Alto	CA	94303
Kurt Haunschild	EAST BAY MUD (CS & SSOs)	PO BOX 24055 (MS# 704)	OAKLAND	CA	94623
Peter Schultze-Allen	EMERYVILLE CITY	1334 Park Avenue	Emeryville	CA	94608

ATTACHMENT: MAILING LIST

LRO* Name	Agency	Street	City	State	Zip
George Hicks	Fairfield City	1000 Webster St	Fairfield	CA	94533
Norman Dorais	Foster City	610 Foster City Blvd	Foster City	CA	94404
Michael Shane Errecart	Fairfield Suisun Sewer District	1010 Chadbourne Road	FAIRFIELD	CA	94534
Chuck Duffy G	Granada Sd	605 3Rd Street	Encinitas	CA	92024
Paul Nagengast	Half Moon Bay City	501 Main St	Half Moon Bay	CA	94019
Greg Shreeve	HAYWARD CITY	777 B Street	HAYWARD	CA	94541
John Joseph Mcguire	Hercules City	111 Civic Drive	Hercules	CA	94547
Tony Geraldi	Town Of Hillsborough	1320 La Honda Street	Hillsborough	CA	94010
Tom Roberts	Homestead Valley Sanitary Dist	P.O. Box 149	Mill Valley	CA	94941
Michael Kirker	Crockett CSD	PO BOX 367	CROCKETT	CA	94525
Mark Williams	Las Gallinas Valley Sanitary District	300 SMITH RANCH Road	SAN RAFAEL	CA	94903
Michael Wells	LIVERMORE CITY	101 Jack London Boulevard	LIVERMORE	CA	94551
Richard Chiu	Town of Los Altos Hills	26379 Fremont Road	Los Altos Hills	CA	94022
Timothy O'DAY	MARIN COUNTY Sanitary District #5	PO BOX 227	TIBURON	CA	94920
Bianca Gomez	Mill Valley City	26 Corte Madera	MILL VALLEY	CA	94941
Ray Mendez	Millbrae City	400 Millbrae Avenue	Millbrae	CA	94030
Eliza Nunez	Milpitas City	455 E Calaveras Blvd	Milpitas	CA	95035
George Irving	Montara	8888 Cabrillo Highway	Montara	CA	94037
Michael Roe	MT. VIEW SANITARY DISTRICT	PO BOX 2757	MARTINEZ	CA	94553
Gerald Merryweather	NAPA SANITATION DISTRICT	PO BOX 2480	NAPA	CA	94558
Brian Ullensvang	National Park Service, Golden Gate Nat'l. Reg. Area	Fort Mason Bldg 201	San Francisco	CA	94123
Tom Piccolotti	North San Mateo County Sanitation District	333 90TH ST	DALY CITY	CA	94015
Stephen R. Krautheim	Novato Sanitary District	500 Davidson Street	Novato	CA	94945
Paul Zolfarelli	Oro Loma Sanitary District	2600 Grant Avenue	San Lorenzo	CA	94580
Javad Ghaffari	Palo Alto City	3201 Bay Shore Road	Palo Alto	CA	94303
MICHAEL BAN	PETALUMA CITY	202 McDowell Boulevard	PETALUMA	CA	94954
Mark Obergfell	Piedmont City	120 VISTA AVE	PIEDMONT	CA	94611
Dan Martin	Pleasanton City of	P. O. Box 520	Pleasanton	CA	94566
Terence Kyaw	Redwood City	1400 Broadway	Redwood City	CA	94065
Johnny Tucker	RICHARDSON BAY SD/TIBURON City	500 TIBURON BLVD	TIBURON	CA	94920
Stephen Friday	Richmond City	450 CIVIC CENTER PLAZA	RICHMOND	CA	94804
Steven Beall	RODEO SANITARY DISTRICT	800 SAN PABLO AVE	RODEO	CA	94572
Stephen Miksis	Sanitary District #1 of Marin	1301 Andersen Drive	San Rafael	CA	94901

ATTACHMENT: MAILING LIST

LRO* Name	Agency	Street	City	State	Zip
John Foley	SEWER AUTHORITY MID-COASTSIDE	1000 CABRILLO Highway	HALF MOON BAY	CA	94019
Larry Smurthwaite	San Bruno City	567 El Camino Road	San Bruno	CA	94066
Ray Chan	San Carlos City	600 Elm Street	San Carols	CA	94070
Legally Responsible Officer	CSU San Francisco	1600 Holloway Avenue	San Francisco	CA	94132
Philip Lee	San Jose City	700 Los Esteros Rd	San Jose	CA	95134
Ray Busch	San Leandro City	3000 DAVIS ST	SAN LEANDRO	CA	94577
Ed Vigil	San Mateo City	330 20TH Avenue	SAN MATEO	CA	94403
Doris Toy	San Rafael Sanitation District	P.O. Box 151560	San Rafael	CA	94915
Barry Hogue	Sanitary District #2 of Marin	300 Tamalpias Drive	Corte Madera	CA	94925
Christopher deGroot	Santa Clara City	1500 WARBURTON AVE	SANTA CLARA	CA	95050
Jeff Carson	SEWERAGE AGENCY OF SOUTHERN MARIN	450 Sycamore Avenue	Mill Valley	CA	94941
Craig Justice	Sausalito-Marin City San Dist	PO Box 39	Sausalito	CA	94965
Jeff Brubaker	SOUTH BAYSIDE SYSTEM AUTHORITY	1400 Radio Road	Redwood City	CA	94065
Lewis Harrison	SAN FRANCISCO, CITY & CO, PUBLIC UTILITIES COMMISSION	525 Golden Gate Avenue	San Francisco	CA	94102
Michael Conachy	Sonoma Cnty Water Agency (SCWA) R1	404 Aviation Boulevard	Santa Rosa	CA	95403
Erik Brown	Sonoma Cnty Water Agency (SCWA) R1	404 Aviation Boulevard	Santa Rosa	CA	95403
John G. Ferons	ST. HELENA CITY	1480 MAIN Street	ST. HELENA	CA	94574
Rex Delizo	Stege Sanitary District	7500 Schmidt Lane	El Cerrito	CA	94530
David Martinez	Suisun City	701 Civic Center Boulevard	Suisun City	CA	94585
Dan Stevenson	SUNNYVALE CITY	PO BOX 3707	SUNNYVALE	CA	94088
Robert Bunce	Tamalpais Community San Dist	305 Bell Lane	Mill Valley	CA	94941
Bill Hargis	Veteran's Home of California	PO Box 1200	Yountville	CA	94599
Michael Mentink	US Navy Treasure Island	750 PHELPS STREET	SAN FRANCISCO	CA	94124
Stuart Morrison	UNION SANITARY DISTRICT	5072 Benson Road	Union City	CA	94587
Greg Haet	UC Berkeley	1936 University Avenue	Berkeley	CA	94704
Ken Taylor	VALLEJO SAN AND FLOOD CONT DIS	450 RYDER Street	VALLEJO	CA	94590
Sergio Ramirez	West Bay Sd	500 Laurel Street	Menlo Park	CA	94025
Kenneth Cook	WEST COUNTY WASTEWATER DISTRICT	2377 GARDEN TRACT RD	RICHMOND	CA	94806
Kelvin Hatchett	West Valley SD	100 Sunny Oaks Avenue	Campbell	CA	95008
Paul Nagengast	Woodside	P.O. Box 94062	Woodside	CA	94062

ATTACHMENT: MAILING LIST

LRO* Name	Agency	Street	City	State	Zip
Donald Moore	Yountville, Town of	6550 Yountville Street	Yountville	CA	94599
Ann Stillman	San Mateo County	555 COUNTY CENTER, 5TH FLOOR	REDWOOD CITY	CA	94063
Darryl Barrow	Westborough Water District	2263 Westborough Boulevard Boulevard	South San Francisco	CA	94080
Carlos Portillo	California Maritime Academy	200 Maritime Academy Drive	Vallejo	CA	94590
Adam Bayer	CSU San Jose	1 Washington Square	San Jose	CA	95192
Randy Green	CA Dept of Corrections	23500 Kasson Road	Tracy	CA	95376
	Oakland City DPW	7101 Edgewater Drive bldg 4	Oakland	CA	94621
Neal Fujita	East Bay Regional Park Dist	2950 PERALTA OAKS Court	OAKLAND	CA	94605
Liem Nguyen	Port of Oakland	530 Water St Fl 1-4	Oakland	CA	94607
Richard Ables	Ca Dept of Parks & Rec South Lake Tahoe	2500 EMERALD BAY Road	SOUTH LAKE TAHOE	CA	96150
Edgar Borglin	Lawrence Berkeley National Lab	1 Cyclotron Road	Berkeley	CA	94720
Richard Berman	Port of San Francisco	PIER 1 FERRY BUILDING	SAN FRANCISCO	CA	94111
Chris Hansen	Ca Dept of Parks & Rec Winterhaven	1 CAPITOL MALL SUITE 500	SACRAMENTO	CA	95814
Jennifer Blackman	BOLINAS COMMUNITY PUBLIC UTILITY DISTRICT (BCPUD)	270 ELM ROAD	BOLINAS	CA	94924
Richard Ables	Ca Dept of Parks & Rec Winterhaven	1 CAPITOL MALL SUITE 500	SACRAMENTO	CA	95814
Norman Bobczynski	US Dept of Energy	1333 Broadway	Oakland	CA	94612
Gary Behrens	San Mateo County	555 COUNTY CENTER, 5TH FLOOR	REDWOOD CITY	CA	94063
Karen Agogino	Sandia National Labratories, California	P.O.Box 5400	Albuquerque	NM	87185
Michael Kirker	Crockett CSD	PO BOX 367	CROCKETT	CA	94525
Russell Ng	City & County of San Francisco, Airport Commision-Design & Construction	P.O. Box 8097	San Francisco	CA	94128
Tom Pickford	Napa River Reclamation District 2109	1501 Milton Road	Napa	CA	94559
Karl Drexel	Tomales Village CSD	PO BOX 156	TOMALES	CA	94971

*LRO is the Legally Responsible Official

Sewer System Management Plan

2016 SSMP Audit

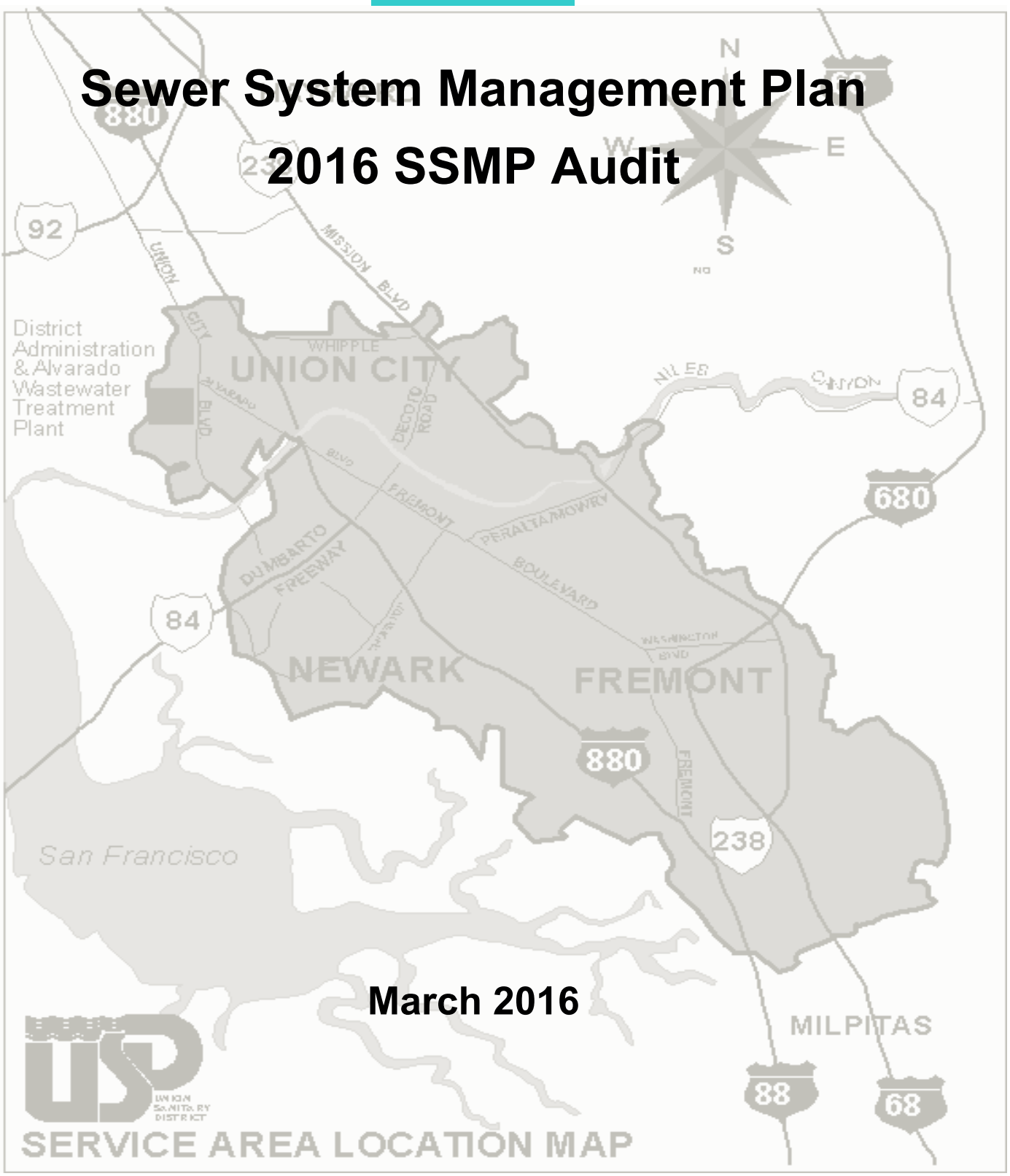

March 2016

This page intentionally left blank

SSMP – 2016 Audit

Table of Contents

- 2016 SSMP Audit - Executive Summary
- 2016 SSMP Audit Table Checklist
- SSMP 2008 to 2016 Update Log Summary
- CY2014 & 2015 SSOs Graphs
- CY2014 & CY2015 Efforts to Prevent SSOs
- Capital Improvement Programs
- Training Activities
- Accomplishments
- Signature Page

2016 SSMP Audit

Executive Summary

March 2016

2016 SSMP Audit

Executive Summary

USD has completed our audit of our Sanitary Sewer Management Plan (SSMP). Attached you will find the details of this audit.

USD has had an SSMP addressing all of the required elements in place for 11 years. We use our SSMP as a tool to successfully manage our collection system. Since our last audit, we updated our SSMP five times. Specifics of the changes are detailed in the Update Log on pages 5 through 8 of this audit. We have had 10 spills over the 2 calendar years of 2014 and 2015. We have recovered 68.5% of the total 11,652 gallons spilled. A total of 60 gals or 0.5% of the total volume spilled was not contained, but did not reach waters of the State during the 24 months of calendar years 2014 and 2015.

Twice a year, we review and update our SSMP, once at the beginning of the Fiscal Year and once at the beginning of the Calendar Year.

2016 SSMP Audit

SSMP Audit Checklist

March 2016

Sewer System Management Plan 2016 SSMP Audit Table

Element	Title	Requirement	Compliant	Current	Comments
I	**Goals**	Reduce, prevent & mitigate SSOs	Y	Y	USD uses a performance management tool called the Balance Scorecard. The Scorecard has objectives and measures with a focus on the prevention of SSOs. Performance is tracked and reported monthly and the version in the SSMP is updated twice a year.
II	**Organization**	Designate Legally Responsible Official (LRO)	Y	Y	LRO – General Manager, Paul Eldredge, (510) 477-7502. Collection Services Manager, James Schofield, (510) 477-7553, Office, or Cell (510) 206-4018. These people are responsible for implementing, managing and updating the SSMP.
		Organization Chart	Y	Y	Updated twice yearly
		Names & phone numbers of key personnel	Y	Y	Updated to reflect current contact information
		Chain of Communication for reporting SSOs	Y	Y	<u>Chain of Communication for responding to SSO's:</u> - Initial call is received and dispatched by: o Customer Service Team during normal business hours – (510) 477-7500 o Total Productive Operations Team after normal business hours – (510) 477-7500 - Dispatched call is received by: o Construction or Maintenance/TV Team 24/7/365 o Or Fabrication, Maintenance & Construction Team 24/7/365 if it is related to Pump Stations, Lift Stations or Force Mains <u>Chain of Communication for reporting SSO's:</u> • Either a Coach or Manager from Collection Services will report SSO's from the gravity system – James Schofield, (510) 477-7553, Office, or Cell (510) 206-4018

Sewer System Management Plan 2016 SSMP Audit Table

Element	Title	Requirement	Compliant	Current	Comments
					• Or the FMC Manager will report SSO's from Pump Stations, Lift Stations or Force Mains – Robert Simonich – (510) 477-7518, Office, or Cell (510) 701-4337 <u>Other Points of Contacts:</u> • New Sewer Installations – Rollie Arbolante, (510) 477-7602, Office, or Cell (510) 828-0000 • Engineering Plan/Designs – Raymond Chau, (510) 477-7606, Office or Cell (510) 896-5072 • Environmental Compliance – Michael Dunning, (510) 477-7369, Office, or Cell (510) 579-3404
III	**Legal Authority**	Prevent illicit discharges to sanitary sewer system	Y	Y	Ordinance 36.03 - Pretreatment Ordinance & Technically Based Local Limits, Updated May 2015
		Require sewers and connection be properly designed & constructed	Y	Y	2006 Standard Specification & Information Bulletin
		Ensure access for inspection, maintenance and repairs	Y	Y	Ordinance 34.07 – June 2015
		Limit discharge of FOG and debris that may cause blockages	Y	Y	Ordinance 38 - Fats, Oils and Grease Control - May 2004
		Ability to inspect FOG producing facilities	Y	Y	Ordinance 38 - Fats, Oils and Grease Control - May 2004
		Enforce violations of the District ordinances	Y	Y	All USD's Ordinances – Including Ordinance #36.03, #34.07, #38 and Standard Specifications & Information Bulletin
IV	**O & M Program**	Maintain up-to-date maps of the sanitary sewer system	Y	Y	Maps are continually updated and inputs from field staff are used to update GIS & CMMS database

Sewer System Management Plan 2016 SSMP Audit Table

Element	Title	Requirement	Compliant	Current	Comments
		Adequate planning, resources and budget to support effective sewer system management and long term goals	Y	Y	Operating and Maintenance & 10 Yr CIP budgets approved annually
		Describe routine preventative maintenance program	Y	Y	72 Month PMP, Selective PM, Root Control Program, Corrosion Control and Easement Maintenance Program
		Document completed preventative maintenance program	Y	Y	Monthly reporting to staff and Board, as well as entered into our Computerized Maintenance Management System (CMMS)
		Adequate I/I monitoring	Y	Y	USD has very few problems with I/I and we follow up on any new sources identified.
		Rehabilitation and replacement plan that identifies and prioritizes sanitary sewer system defects	Y	Y	USD TV's the entire system every 6 years, performs condition assessment, defects are identified and prioritized to be addressed either through repairs, replacement, rehabilitation or maintenance.
		Provide regular technical training for sewer system staff	Y	Y	USD has an ongoing aggressive approach to training as outlined in the annual training schedule
		Require contractors to provide training for their workers who work in the Districts sewer system facilities	Y	Y	Included in contract specifications for all Contractors.
		Maintain equipment inventory	Y	Y	• All pump stations have redundant pumps. The loss of one pump doesn't affect our ability to transport wastewater. • Six of the seven stations have emergency standby generators. Flow to the smallest lift station will divert to another section of the gravity system when flow backs up. (Standby generator is not needed.) • Longer lead time parts (impellers, wear rings & mechanical seals) are stocked.

Element	Title	Requirement	Compliant	Current	Comments
					• Stations are monitored by SCADA and remote operation can be instituted to certain equipment and systems. • Twin Force Mains are in place on large pump stations.
		Maintain critical spare part inventory	Y	Y	• Materials and Equipment are on site at our Corporation Yard to make emergency repairs on sewer mains. • Pumps, hoses, temporary piping and various parts are on site at our Corporation Yard to by-pass failed sewers until repairs are completed.
		Outreach to plumbers and contractors	Y	Y	USD has an informative brochure that we give to contractors and plumbers. Information is also available on our website.
V	**Design & Performance Provisions**	Design and construction standards for new sanitary sewer system facilities	Y	Y	USD Standard Specifications and Information Bulletin dated 2006. (Also available on website.) Individual Specifications and Drawings for Capital Projects are included in Project Plans.
		Design and construction standards for repair and rehabilitation of existing sanitary sewer system facilities	Y	Y	USD Standard Specifications and Information Bulletin dated 2006.
		Procedures for the inspection and acceptance of new sanitary sewer system facilities	Y	Y	USD Standard Specifications and Information Bulletin dated 2006.
		Procedures for the inspection and acceptance of repaired and rehabilitated sanitary sewer system facilities	Y	Y	USD Standard Specifications and Information Bulletin dated 2006.

Sewer System Management Plan 2016 SSMP Audit Table

Element	Title	Requirement	Compliant	Current	Comments
VI	**Overflow Emergency Response Plan (OERP)**	Procedure for the notification of primary responders	Y	Y	Defined Call-Out procedures are on the On-Call Schedules and SOP CS103-SSO Response, updated in Dec. 2013
		Procedures for the notification of regulatory agencies	Y	Y	WDR & MRP & Other SSO Reporting Requirements Flow Chart updated Sept-13 and SOP CS103-SSO Response recently updated
		Proper reporting of all SSOs	Y	Y	Updated Sept-2008, Jun-2011 & Sept-2013 to reflect state changes
		Procedure to ensure District Staff are aware of and follow OERP	Y	Y	WDR & MRP & Other SSO Reporting Requirements Flow Chart updated Sept-13 and SOP CS103-SSO Response updated in Dec. 2013. Last training in Sept. 2013 for Spill Response and SSOETTS.
		Procedure to ensure District staff are trained in the OERP procedures	Y	Y	WDR & MRP & Other SSO Reporting Requirements Flow Chart updated May-11 and SOP CS103-SSO Response updated December 2013
		Procedure to ensure contractor personnel are trained in the OERP procedures	Y	Y	Any Contractor used for this is directly supervised by USD Management
		Procedures to address emergency operations such as traffic and crowd control	Y	Y	Covered in SOP-CS103 SSO Response updated in December 2013
		Program to prevent the discharge of sewage to surface waters	Y	Y	Covered in SOP-CS103 SSO Response updated in December 2013
		Program to minimize or correct the impacts of any SSOs that occur	Y	Y	Covered in SOP-CS103 SSO Response updated in December 2013
		Program of accelerated monitoring to determine the impacts on surface waters of any SSOs that occur	Y	Y	Covered in SOP-CS103 SSO Response updated in December 2013

Sewer System Management Plan 2016 SSMP Audit Table

Element	Title	Requirement	Compliant	Current	Comments
VII	**FOG Control Program**	Identification of "hot spots" with FOG-related problems	Y	Y	Prevention of Recurring FOG-related SSO's & Main Line Stoppages (MLS) All SSO's and MLS's are investigated for cause. If FOG is determined to be the cause, the Environmental Compliance Team is notified and their FOG Inspector follows up with Source Control. Further, the sewer mains' Cleaning Schedule is adjusted in frequency and method of cleaning to prevent recurrence.
		Public outreach program that promotes the proper disposal of FOG	Y	Y	USD uses a variety of approaches including door Hangers, outreach during inspections, newsletter, newspaper ads, BAPPG, and Spanish speaking radio ads
		Plan for the disposal of FOG generated within the Districts service area	Y	Y	Covered in Ordinance 38 Fats, Oils and Grease Control
		Demonstrate that the District has allocated adequate resources for FOG control	Y	Y	Operating and Maintenance & 20 Yr CIP budgets approved annually
		Program of preventative maintenance for sanitary sewer system facilities that have FOG-related problems	Y	Y	USD's Selective Maintenance Program identifies sewer mains with (hot spots) sags, surcharges, grease deposits, debris, siphons, capacity and velocity problems as well as other maintenance problems, then assigns the appropriate method and frequency of preventive maintenance to prevent SSOs.
VIII	**System Evaluation and Capacity Assurance Program (SECAP)**	Identification of elements of the sanitary sewer system that experience or contribute to SSOs caused by hydraulic deficiencies	Y	Y	USD owns and operates the InfoWorks™ Flow Model to assess current and future capacity requirements in the District's collection system. The District completed the Sewer Master Plans for the Irvington, Newark and Alvarado Basins in 1995, 1997, and 2000. Thereafter, the District updated the Irvington Basin Sewer Master Plan in 2004 and 2015 and the Alvarado Basin Sewer Master Plan

Element	Title	Requirement	Compliant	Current	Comments
					in 2008 and the Newark Basin Sewer Master Plan was updated in 2012.
		Establish design criteria that provide adequate capacity	Y	Y	USD owns a variety of flow monitoring equipment that it uses periodically to check peak flows in various pipe sections. When working on the Sewer Master Plans, flow monitoring is conducted at about a dozen locations in each basin of the collections system. The flow data is then used to calibrate the flow model to ensure accuracy of the program along with land use information and rain fall data. The Flow Model is then run to assess the capacity requirements in the District's collection system. USD uses the Design Storm criterion of 'a storm with a 10 year recurrence interval'. The capacity deficiencies identified by the flow model are then grouped, prioritized, and, if needed, included in the District's 10-yr CIP budget.
		Short term CIP that addresses known hydraulic deficiencies	Y	Y	Same as above
		Long term CIP that provides for future capacity needs	Y	Y	Same as above
		Procedures that provide for the analysis, evaluation, and prioritization of hydraulic deficiencies	Y	Y	Same as above
		The short and long term CIPs include schedules for the correction of each identified hydraulic deficiency	Y	Y	Same as above

Sewer System Management Plan 2016 SSMP Audit Table

Element	Title	Requirement	Compliant	Current	Comments
IX	**Monitoring, Measurement and Program Modifications (MMPM)**	Maintain relevant information to establish, evaluate, and prioritize SSMP activities	Y	Y	USD uses the Balance Scorecard to track critical activities as well as the Annual Report of Sanitary Sewer Overflows for Calendar Years 2007 thru 2011 and SSMP Audit, as well as the 2014 SSMP Audit and 2016 SSMP Audit.
		Monitor implementation of the SSMP	Y	Y	Same as above.
		Measure, where appropriate, performance of the elements of the SSMP	Y	Y	Same as above. Measures in Balance Scorecard include: Minimize Overflows SSOs: - # of Category 3 SSOs - # of Category 2 SSOs - # of Category 1 SSOs - Percent spill recovery - SSOs # of repeats - Critical Asset Failures Provide Uninterrupted Service: - Response Time from notification thru initial contact includes dispatch time Preventing SSOs: - Feet Per Crew/Day - Cleaning - Feet Per Crew/Day - Televising Learning & Growth: - # of individual Competency Assessments passed
		Assess success of the preventative maintenance program	Y	Y	Same as above.
		Update SSMP program elements based on monitoring or performance	Y	Y	Same as above.
		Identify and illustrate SSO trends	Y	Y	Same as above.
X	**SSMP Program Audits**	Conduct periodic audits	Y	Y	USD uses the Balance Scorecard to track critical activities as well as the Annual Report of Sanitary Sewer Overflows

Sewer System Management Plan 2016 SSMP Audit Table

Element	Title	Requirement	Compliant	Current	Comments
					for Calendar Years 2007 thru 2011 and SSMP Audit, as well as the 2014 SSMP Audit and 2016 SSMP Audit.
		Record results of the audit in a report	Y	Y	Same as above.
		Record changes made and/or corrective actions taken	Y	Y	SSMP Update Log has been kept since 2008. It identifies specific changes to the SSMP and the dates the changes were made. Refer to the SSMP 2008 to 2016 Update Log Summary.pdf.
XI	**Communication Program**	Communicate with the public regarding the preparation of the SSMP	Y	Y	Placed ad in local newspapers. Presented to the Board of Directors at regular Public Meetings.
		Communicate with the public regarding SSMP performance	Y	Y	Done at Board Meetings.
		Communicate with satellite sewer systems	NA	NA	We do not have satellite sewer systems.

2016 SSMP Audit

SSMP Update Log

March 2016

SSMP 2008 Through 2016 Update Log Summary **(Update Log Binder in CS Mgr. Office)**

Date Updated	Item	Comments
Sept. 2008	BACWA & Other Agencies Revisions: BACWA Collection Systems Committee,	The official email address for reporting SSOs under the 2-hour notification/certification requirement **when there is no access to the internet or if the website is down**, is as follows: RB2SpillReports@waterboards.ca.gov
Sept. 2008	Reporting SSOs Flow Chart changes	Added a new box on page 1 – under 'Did it reach a Storm Drain in Fremont?' – It should read 'Did it occur in an area that is colored Red or Yellow on USD Block Books?' If the answer is NO, arrow should point down If the answer is YES, arrow should point to the right, that box should read 'Go to J, then answer the next question. On second page add arrow at the bottom of the table. If the SSO was a Category 1 in an area shaded RED, Notify ACWD ASAP @ 668-4200 If the SSO was a Category 1 in an area shaded Yellow, Notify ACWD within 2 hours @ 668-4200. If the SSO was a Category 2 in any area, forward the CIWQS email of the certified report to steve.dennis@acwd.com and gregorylee.buncab@acwd.com. On Page 2, in the rows 'B' and 'C' add this to the descriptions "Forward the CIWQS email of the certified report to steve.dennis@acwd.com and gregorylee.buncab@acwd.com "
Sept. 2008	USD Fiscal Year Baseline Updates	General Update of Information for FY09: FY08 Y/E Collection Services Monthly Status FY08 Y/E Collection Services Balance Scorecard July 2008 Ordinance No. 36 July 2008 Ordinance 34.04 2006 Standard Specifications & Information Bulletin Union Sanitary District FY09 Operating & CIP Budgets FY09 Collection Services Project PM Plan Corrosion Control Program Dosing Schedule Update Ten Year CIP FY 09-18 Expenditure Plan FY09 Training Schedule FY 2008-2013 Renewal & Replacement – Vehicles & Equipment Plan

SSMP 2008 Through 2016 Update Log Summary **(Update Log Binder in CS Mgr. Office)**

Date Updated	Item	Comments
_	_	September 2008 WDR Reporting Flow Chart Update
_	_	FOG Program FY09 Collection Services Selective Lines PM Plan
_	_	March 27, 2008 Brown & Caldwell Technical Memorandum on Force Main Assessment
_	_	FY08 Y/E Collection Services Labor Utilization
_	_	FY08 Y/E Collection Services Annual Baseline
Sept. 2009	USD Fiscal Year Baseline Updates	General Update of Information for FY10:
_	_	FY09 Y/E Collection Services Monthly Status
_	_	FY09 Y/E Collection Services Balance Scorecard
_	_	FY09 Y/E Collection Services Labor Utilization
_	_	FY09 Y/E Collection Services Annual Baseline
_	_	Union Sanitary District FY2010 Operating & CIP Budgets
_	_	FY10 Collection Services Projected PM Plan
_	_	Corrosion Control Program Dosing Schedule Update
_	_	FY 2010 & 2011 Budgets
_	_	Ten Year CIP FY 10-18 Expenditure Plan
_	_	FY10 Training Schedule
_	_	FY 2010-20 Renewal & Replacement – Vehicles & Equipment Plan
_	_	SSMP Audit document update
_	_	USD Brochure – Thinking About Repairing or Replacing Your Sewer?
March 2010	USD Annual SSO & SSMP Update	USD Annual Report of Sanitary SSOs for CY2009 and SSMP Audit
_	_	Signed Return Receipt Card & documents
_	_	General Update of Information for FY10:
March 2010	Updates & Changes	USD Organization Chart
_	_	Updated Easement Maintenance Procedures Page
May 2010	SSMP Business Practice Evaluation	May 2010 SSMP Audit – Final Docs
_	_	5-12-10 Letter from James J. Courchaine, Westin (Outside Auditor of SSMP)
_	_	USD Management Operations Maintenance Score Sheet
_	_	*Preliminary* SSMP Business Practice Evaluation for USD
Sept. 2010	USD Fiscal Year Baseline Updates	General Update of Information for FY11:
_	_	FY10 Y/E Collection Services Monthly Status
_	_	FY10 Y/E Collection Services Balance Scorecard
_	_	FY10 Y/E Collection Services Labor Utilization

SSMP 2008 Through 2016 Update Log Summary **(Update Log Binder in CS Mgr. Office)**

Date Updated	Item	Comments
_	_	FY10 Y/E Collection Services Annual Baseline
_	_	Union Sanitary District FY2011 Operating & CIP Budgets
_	_	FY11 Collection Services Projected PM Plan
_	_	Corrosion Control Program Dosing Schedule Update
_	_	FY 2011 Budgets
_	_	Ten Year CIP FY 11-19 Expenditure Plan
_	_	FY11 Training Schedule
_	_	FY 2011-21 Renewal & Replacement – Vehicles & Equipment Plan
_	_	SSMP Audit document update
_	_	USD Brochure – Thinking About Repairing or Replacing Your Sewer?
Sept. 2010	Other Updates:	Other Updates:
_	_	Organization Chart
_	_	GIS – CMMS Integration 8/30/10 update
_	_	District CS PM Map
_	_	FY11 Plan & detail schedules
_	_	Dosing Schedule
_	_	FAC 04 Newark Pump Station FMC PM update
_	_	Vehicle & Equipment Excel Spreadsheet update
_	_	Emergency Bypass Inventory update 8-31-10
_	_	Responding to SSOs Flow Chart
_	_	Prevention of Recurring FOG related SSO – FOG Program update
_	_	Capacity Management sheet update
_	_	FY10 Labor Utilization Graph Update
April 2011	USD Annual SSO & SSMP Update	USD Annual Report of Sanitary Systems Overflows for CY 2010 and SSMP Audit
_	_	Signed Return Receipt Card & documents
June 2011	Update & Change:	Update & Change State Waste Discharge Requirements-WDR Flow Chart (OES changed to CAL-EMA and SSO on-line reporting eliminated)
_	_	
January 2012	Update & Change	SOP CS-103 SSO Response
_	_	FY12 Q2 M/E Status
_	_	FY12 Q2 BSC Update
February 2012	_	Root Control Maintenance Program

SSMP 2008 Through 2016 Update Log Summary **(Update Log Binder in CS Mgr. Office)**

Date Updated	Item	Comments
_	_	o Changed wording to: Cut- Cleaning using Chain Flail method
April 2012	Update & Change	Corrosion Control Updated Schedule
_	_	USD Org Chart updated 1-30-2012
April 2012	USD Annual SSO & SSMP Update	USD Annual Report of Sanitary SSOs for CY2011 and SSMP Audit
_	_	Signed Return Receipt Card & documents
_	_	FY12 Q3 M/E Status
_	_	FY12 Q3 BSC Update
May 2012	Re-Certify SSMP Audit Updates	USD Annual Report of Sanitary SSOs for CY2011 and SSMP Audit
_	_	Signed Return Receipt Card & documents
_	_	General Update of Information for FY12:
_	_	USD Organization Chart & FY12 Qtr3 BSC
_	_	May 21st Re-Certify SSMP Binders for Board Workshop
_	_	Updated various SSMP Element Summary Title Sheets
_	_	Updated Summary of Master Plans sheet
_	_	Created & Updated 2012 SSMP Audit Table
_	_	Consolidated SSMP Log Update Summary Sheet
_	_	Created Re-Certification Public Notice sheet
_	_	Updated SSMP binders with all changes, additions and updates
April 2013	Add & Update Plans	USD Newark Basin Sewer Master Plan Update sheet added
_	_	FY13 Revised Projected Footages Plan
_	_	FY13 Qtr3 CS Balance Scorecard
_	_	WDR – SSO Response Flow Chart Update
Nov/Dec 2013	Add, Change & Update	MRP – 2013 Update • Jul. 26, 2013 Amendment Letter • Fact Sheet • Order No. WQ 2013-0058-EXEC
	_	Jul-2013 USD Org Chart Update Jul-2013 CIWQS USD Collection System Questionnaire Update
	_	FY14 USD Operating & CIP Budgets
	_	FY14 CS Plan • FY14 Selective Listing • FY14 C/F & Other Areas R/C Listing • FY14 Evaluate for R/C – 218/219 Listing

SSMP 2008 Through 2016 Update Log Summary **(Update Log Binder in CS Mgr. Office)**

Date Updated	Item	Comments
		• FY14 Visual Inspect Main List • FY14 Corrosion Control PMP – 12 Mo
		Ten Year CIP FY14-23 Expenditure Plan • CIP FY14-23 Listing
		FY14 Training Schedule
		• FY14 Veh-Eqt Renewal & Replacement Bdgt • FY14 Plant & Pump Stn Renewal & Replacement Bdgt • FY14 Vehicle & Equipment Listing
		Jul-13 SSO Questionnaire
		• Notification & Reporting of SSO Change Update • SSO Response SOP-CS103 • SSO Reporting Flow Chart
		10-3-12 Discontinuation of Rqt for Annual SSOs & Annual SSMP Audits
		• FY13 Labor Utilization Graph • FY13 Annual Baseline • FY14 Plan Goal Graph
		SSMP 2008 Through 2013 Update Log Summary
Dec 20-30 2013		SSMP converted to PDF and put on Districts website
Feb-May 2014	2014 SSMP Audit Summary	• Prepare 2014 SSMP Document to include: ▪ 2014 SSMP Audit Cover Page ▪ Table of Contents ▪ Executive Summary ▪ SSMP Audit Checklist ▪ SSMP Update Log ▪ CY2012 & CY2013 SSOs Graphs ▪ Efforts to Prevent SSOs ▪ Capital Improvement Programs ▪ Training Activities ▪ Accomplishments
		Update USD portal and webpage
August 2014	Add, Change & Update	• FY15 Plan Graph
		• FY15 Plan Summary
		• FY15 BSC Collection Services
		• Organization Update

Date Updated	Item	Comments
		• USD Org Chart Job Titles-Names
		• Aug-15CIWQS USD Collection Systems Questionnaire
		• Legal Authority Summary
		• Ord 34.06 Permit-Inspection Fees
		• FOG Ordinance 38
		• FY15 USD Operating and CIP Budgets
		• FY15 Plan Selective Unit Listing
		• FY15 Root Control Unit Listing
		• FY15 Corrosion Cntrol PMP 12 Mo Sche
		FMC updates:
		▪ Sample Hansen WO
		▪ Pump Station Facilities
		▪ Pump Station Facilities 01
		▪ Pump Station Facilities 03
		▪ Pump Station Facilities 04
		▪ Pump Station Facilities 06
		▪ Pump Station Facilities 07
		▪ Pump Station Facilities 13
		▪ FMC SCADA Checklist
		• FY15-24 CIP Graph
		• FY15-24 CIP Proj List
		• FY15 USD Quarterly Training Plan
		• FY15 Veh-Eq-Plnt PS Replcmt Bdgt
		• USD Newsletter Autumn 2013
		• FY14 Labor Utilization
		• FY14 YE Annual Baseline
		• Aug-14 CIWQS USD Collectiion System Questionnaire
		• FY15 SSMP Audit Log Update
December 2014	Add, Change & Update	• Organization
		LRO change to Paul Eldredge
		Collection Services Manager to James Schofield
		Treatment & Disposal Manager to Armando Lopez

Date Updated	Item	Comments
		Org Chart Updates
		• 2014 SSMP Audit – added signature page
		• SSO Reporting Flow Chart – page numbers taken off
		• SSMP PDF file updated & made ready for upload to USD website by IT
August 2015	Update FY16 Plans & Ordinances	• FY16 Plan Graph
		• FY16 Plan Summary
		• FY16 BSC Collection Services
		• USD Org Chart Mgrs Names-Job Titles
		• Jul-2015 CIWQS USD Collection Systems Questionnaire
		• Ordinance 36.03 Revised 2015
		• Ordinance 34.07 Revised 2015
		• FY16 USD Operating and CIP Budgets
		• FY16 Plan Selective Unit Listing
		• FY16 Plan Selective QA/QC 10% Listing
		• FY16 Root Control Unit Listing
		• FY16 Root Control QA/QC 10 % Listing
		• FY16 Corrosion Control PMP 12 Mo Sched
		• FY16-25 CIP Graph
		• FY16-25 CIP Proj List
		• FY16 USD Quarterly Training Plan
		• FY16 Veh-Eq-Plnt PS Replcmt Bdgt
		• FY16 Plant-PS Replcmt Bdgt
		• VEH AND EQUIP WKST FY16
		• USD Newsletter Spring 2015
		• FY15 Labor Utilization
		• FY15 YE Annual Baseline
		• FY16 SSMP Audit Log Update
		• Update USD website with Updated SSMP
Feb-May 2016	2016 SSMP Audit Summary	Prepare 2016 SSMP Audit Documents to include:
		▪ 2016 SSMP Audit Cover Page ▪ Table of Contents ▪ Executive Summary ▪ SSMP Audit Checklist

SSMP 2008 Through 2016 Update Log Summary **(Update Log Binder in CS Mgr. Office)**

Date Updated	Item	Comments
		▪ SSMP Update Log ▪ CY2014 & CY2015 SSOs Graphs ▪ Efforts to Prevent SSOs ▪ Capital Improvement Programs ▪ Training Activities ▪ Accomplishments ▪ Signature Page
May 2016	Update Changes	Update USD portal and webpage
		FY16 Qtr3 BSC Collection Services Update
		Organization Update (Name and phone number change updates)
		USD Org Chart Job Titles - Names Update
		Legal Authority Update (Ordinance revisions)
		Summary of Master Plans Update (Irvington Sewer Master Plan addition)

2016 SSMP Audit

CY2014 & CY2015 SSOs Graphs

March 2016

Calendar years 2014 and 2015 Graphic Representations:

Table 1. Volume of SSOs CY 2014 & CY2015

Description	Volume	Percent of Total
Total volume contained & returned to sewer system for treatment	7,976	68.5%
Total volume reaching waters of the State	3,616	31.0%
Total Volume not contained but not reaching waters of the State	60	0.5%
Total	11,652	100.0%

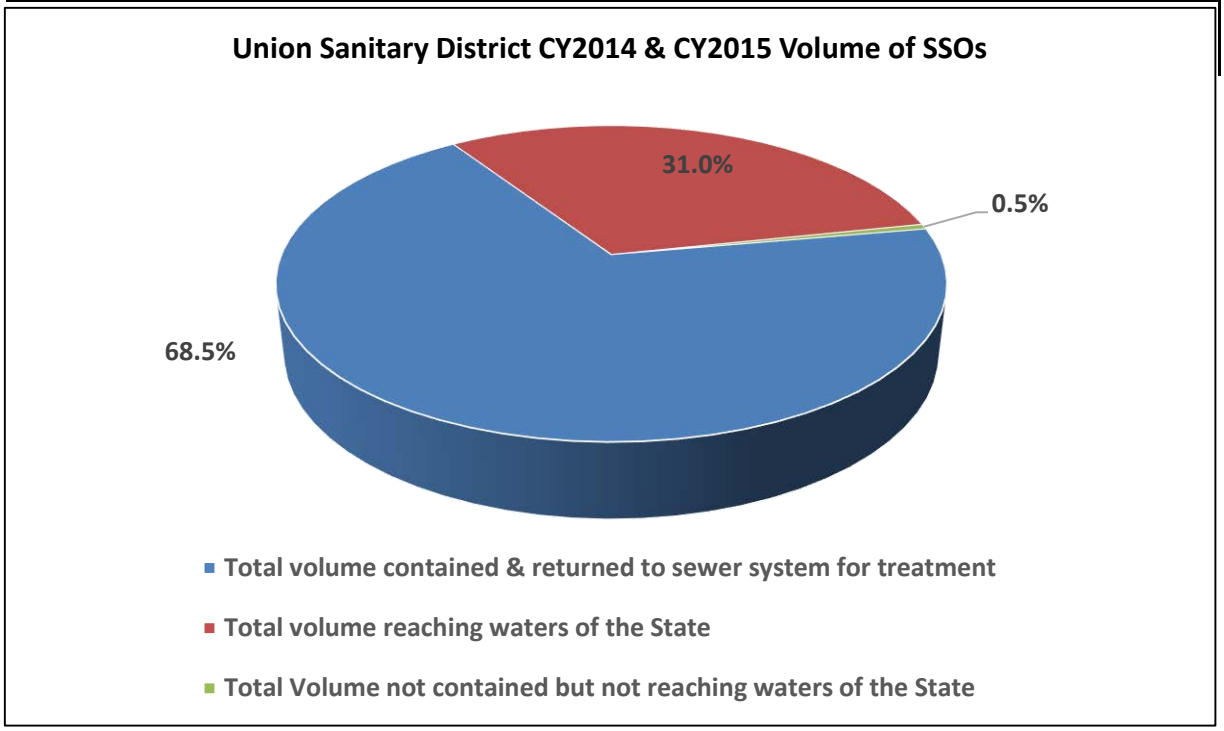

Table 2. Causes of SSOs

Cause of SSO	CY2014	CY2015	Totals	Percent of Total
Blockage:				
Roots	2	1	3	30.0%
Grease				0.0%
Rags				0.0%
Debris from Laterals		1	1	10.0%
Vandalism				0.0%
Animal Carcass				0.0%
Construction Debris				0.0%
Multiple Causes				0.0%
Other				0.0%
Subtotal for Blockage	2	2	4	40.0%
Infrastructure Failure	3		3	30.0%
Inflow & Infiltration				0.0%
Electrical Power Failure				0.0%
Flow Capacity Deficiency				0.0%
Natural Disaster				0.0%
Bypass				0.0%
Cause Unknown				0.0%
Other Party Fault	1	2	3	30.0%
Total	6	4	10	100.0%

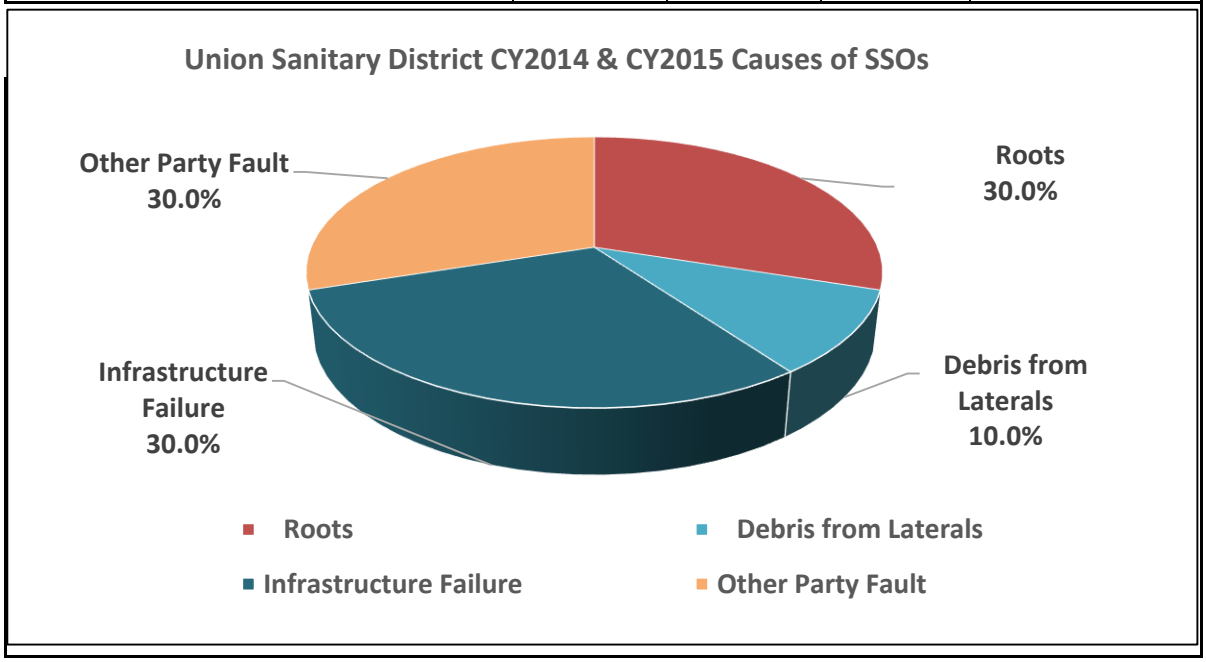

SSO Trends

Calendar Year	CY08	CY09	CY10	CY11	CY12	CY13	CY14	CY15
Calendar Year Spill Count	12	6	12	5	5	3	6	4
# of SSOs Per 100 Miles of Sewer	1.54	0.77	1.54	0.64	0.64	0.38	0.77	0.53

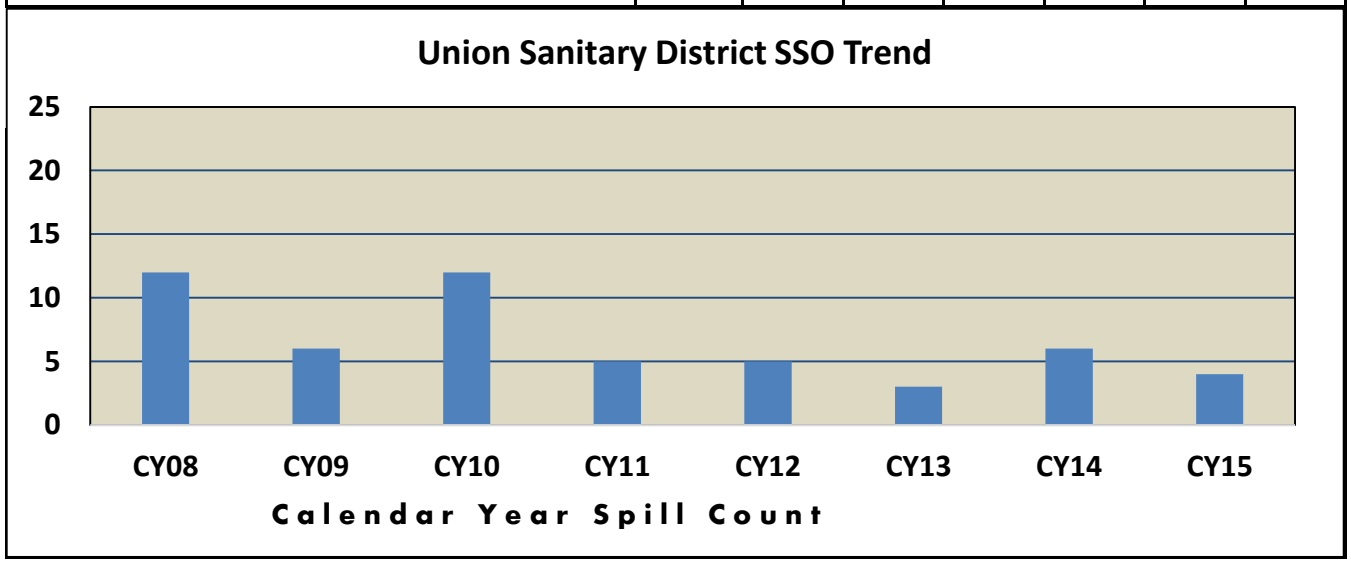

Union Sanitary District Gallons Collected / Spilled for CY14/15

Description	Gallons	Percentage
CY14/15 Gallons Collected	16,560,860,000	99.9999293%
CY14/15 Gallons Spilled	11,652	0.0000704%
CY14/15 Not Recovered, That Did Not Reach State Waters	60	0.0000004%
CY14/15 Reached State Waters	0	0.0000000%

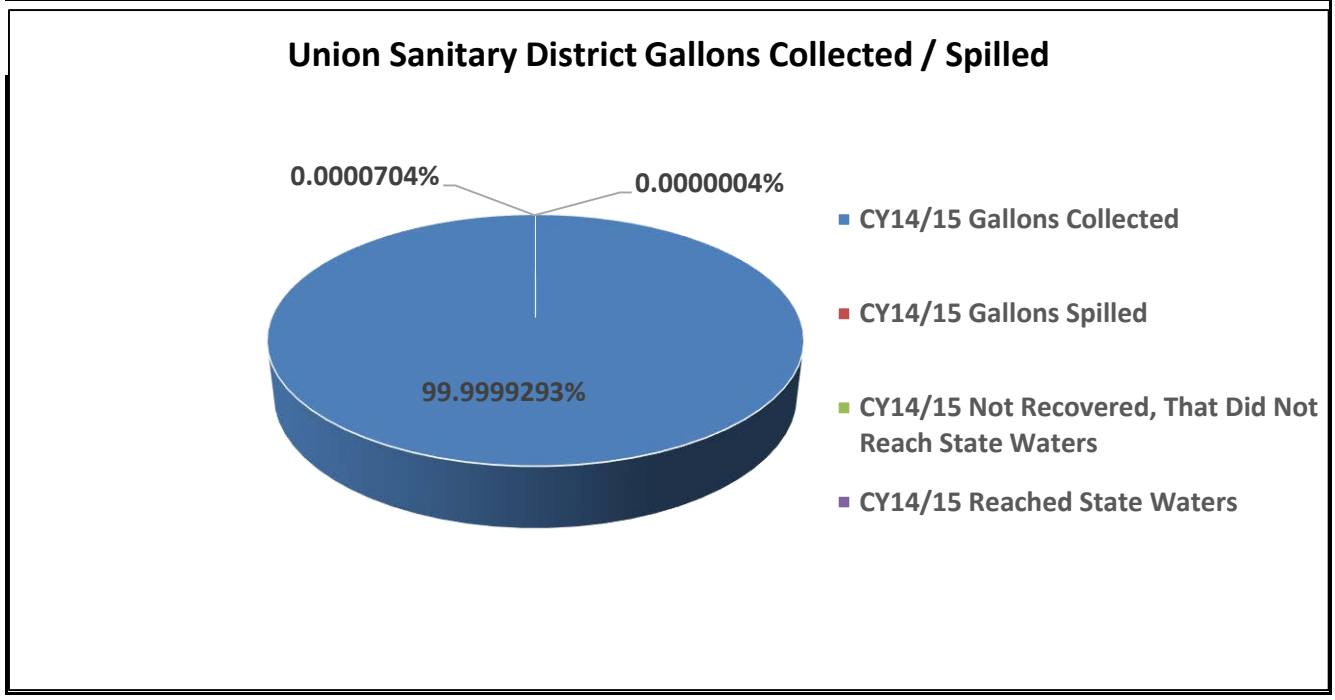

2016 SSMP Audit

Efforts to Prevent SSOs

March 2016

2016 SSMP Audit

CY2014 & CY2015 Efforts to Prevent SSOs and Minimize Their Impact Through O & M

The USD Collection System Maintenance group conducted the following activities in an effort to proactively manage our system.

Description Of Efforts	**CY14 Count**	**CY15 Count**	**Total Count**
Service Requests investigated	**324**	**301**	**625**
Spot Repairs completed	**21**	**31**	**52**
Trenchless Point Repairs completed	**232**	**264**	**496**
Mains Cleaned on the Selective Maintenance Program (these are lines that have had blockages in the past)	**740**	**798**	**1,538**
Mains cleaned on 72 Months Preventative Maintenance Program	**2731**	**2,692**	**5,423**
Mains Treated for Root Control (these are lines that have had root caused blockages in the past or were likely to in the future)	**1,199**	**1,108**	**2,307**
Stoppages that did not result in a spill due to a quick response or our system design with grade breaks and relief points	**18**	**24**	**42**
Mains Televised to assess line condition	**3,478**	**2,715**	**6,193**
Mains received more frequent service on the Selective Maintenance Program	**213**	**114**	**327**
Mains added to Selective Maintenance due to line condition assessment	**203**	**33**	**236**
FOG Inspections	**555**	**568**	**1,123**
FOG Outreach events	**60**	**81**	**141**

2016 SSMP Audit

Capital Improvement Programs

March 2016

2016 SSMP Audit

Capital Improvement Program Activities

In CY2014 & CY2015 USD completed the following:

1. Construction of the Cast Iron Lining, Phase V project,
2. Design and construction of the Newark Backyard SS Relocation – Phase 1 project,
3. Design and construction of the Jarvis Ave. SS Replacement project,
4. Design and construction of the Upper Hetch Hetchy Corridor SS Rehabilitation project,
5. Design and construction of the Newark Backyard SS Relocation – Phase 2 project,
6. Design and construction of the Misc. Spot Repairs – Phase VI project,
7. Design of the Alvarado-Niles Sewer Rehabilitation project,
8. Design of the Pine St. Easement project,

In 2016, USD will work on the following projects:

1. Design and Construction of the Newark Backyard SS Relocation – Phase 3 project,
2. Construction of the Alvarado-Niles Sewer Rehabilitation project,
3. Construction of the Pine St. Easement project.

2016 SSMP Audit

Training Activities

March 2016

2016 SSMP Audit

Training for CY2014 and CY2015

Conducted over 100 training sessions for our Collection System Workers. A sampling of those include:

- A review of 35 Standard Operating Procedures (SOPs) on various equipment and tasks involved in Collection System O & M including:
  - Trouble Calls & Underground Service Alerts (USA)
  - SSO Response & Relieve Stoppage
  - Wash Down Street & Manholes
  - Plugging
  - Magnetic Manhole Cover Lifter
  - Accessing Private Property & Smoke Testing
  - Sewer Snake (Rigid K-7500)
  - Infiltration Gun
  - Spot Repair & Trench Shoring
  - Air Hammers & Tampers
  - Stubs & Channels
  - Rigid Pipe Cutter (clay)
  - Ladder Use
  - Excavation & Backfill
  - SSL – Pre-Trip, Start-Up, & Shut-Down; SSL – Loading & Unloading & SSL – Bobtail Attachment System
  - Arrow & Sign Boards
  - Pot Holing
  - Vacuuming, Dewatering & Dumping
  - Sewer Line Cleaning & Use of Special Tools
  - Make a Bullet Connection
  - Rebuild RST Mainline Tractor
  - Camera Evacuation/Charging (RST)
  - Die Grinder Operation
  - Booster Cable & Truck Pac Use
  - Easement Maintenance: Grass Trimmer/Brush Cutter & Power Pruner PPF-211
  - Dual Cable Winch Truck #17 & Single Cable Winch Truck #76

- Training and Assessments on:
  - Skid Steer Loader assessments completed
  - Tractor Loader/Back Hoe assessments completed
  - Vactor Operations assessments completed
  - Confined Space Entry Certification completed
  - Forklift Re-certification completed

- Attended Training classes, workshops and seminars on:
  - Competent Person Traffic Control
  - Competent Person USA Laws and Regulations
  - Risk Management (Gordon Graham)
  - Hazmat Handler
  - First Aid & CPR
  - By-Pass Training
  - Confined Space Entry
  - Back Safe and IIPP
  - PPE Voluntary Use of Dust Masks
  - Flagger/Traffic Control
  - CDL Training
  - NASSCO
  - Kronos Time Keeping
  - CWEA Hydro and Rodding Operations
  - CWEA Supervisor Safety Seminar
  - CWEA Safety Day In Woodland

2016 SSMP Audit

Accomplishments

March 2016

2016 SSMP Audit

Accomplishments

In calendar year 2014 and 2015, we had the following accomplishments:

Progress/Accomplishments

Supervisory Transition

- Successful recruitment of CS Coach as CS Manager
- Successful recruitment of CS Planner/Scheduler as replacement CS Coach
- Completed training of CS Manager's responsibilities and handoff of managing Vehicle and Equipment R&R to new CS Manager,
- CS Coach Shawn Nesgis received Jerry D. Scott Superintendent of the Year Award

Maintenance Accomplishments

- Completed 2,490,717 total feet or 472 miles of cleaning and 1,615,845 total feet or 306 miles of televising of sewer lines in calendar years 2014 and 2015
- Responded to a total of 625 service request calls in calendar years 2014 and 2015
- Completed a total of 548 main repairs in calendar years 2014 and 2015
- Marked and located all sewer lines identified through Underground Service Alerts

Regulatory Accomplishments

- USD has had a total of 10 SSOs with 6 SSOs in calendar year 2014 and 4 SSOs in calendar year over a total USD closed sewage system of 770 miles

Safety Accomplishments

- Organized a Safety Recognition Breakfast for the CS Work Group for going 180 days without a reportable injury
- The CS Construction Team celebrated going over 1200 days without a reportable injury

Employee Development

- Successful recruitment and hiring of four new Collection System Workers;
- Training of 4 Collection System Workers including;
  - Commercial driver's training
  - Qualified Applicators Certification for the District Root Control Program,
- 4 employees increased their CWEA Technical Certification beyond the minimum requirement.
- Performed By-Pass training exercise and debrief for the entire staff.
- Nine Collection System Workers attended the CWEA Woodland Safety Fair.

Industry Stewardship Accomplishments

- Hosted and participated in the Cues Camera Users Group Meeting.
- Assisted City of San Jose with Spill Estimation
- Rodeo Sanitary District with review of their SSMP
- Technical Certificate Training for CWEA
- Attended and presented at the 2014 CWEA Annual Conference
- Hosted a CWEA Tour for the CWEA Annual Conference in 2014
- Hosted the 2015Vendor Fair for MSA;
- Hosted Disaster Preparation Training for MSA
- Hosted a California Alliance for Sanitary Sewer Excellence meeting
- Other miscellaneous committees participated in, BACWA Collection Services Meeting; CIWQS SSO Data Review Committee; CSOTF Benchmarking meeting; CASSE Benchmarking & General meetings; Collection System of the Future Group; and with State Committee to start the process to rewrite the SSMP Development Guide
- Provided training on CS cleaning and inspection processes to members of the Environmental Protection Agency and State Water Board.

2016 SSMP Audit

Signature Page

I have reviewed the contents of this 2016 SSMP Audit compiled under my direction and have determined this document to be accurate and correct.

Dated: 5/16/2016

Signed: James Schofield

James Schofield, Collection Services Manager
Union Sanitary District

Sewer System
Management Plan (SSMP)

Certification

- **USD Board adopts on July 23, 2007**
- **Online Certification by Staff before August 2, 2007**

Re-Certifification

- **USD Board approval and re-certification workshop June 6, 2012**
- **USD Board approval and re-certification July 9, 2012**
- **Online Certification by Staff in 2012 after July 9, 2012**

Re-Certification

- **USD Board approval and re-certification on enter January 13, 2020**
- **Online Certification by Staff in 2019 after January 13, 2020**

Directors
Manny Fernandez
Tom Handley
Pat Kite
Anjali Lathi
Jennifer Toy

Officers
Paul R. Eldredge
General Manager/
District Engineer

Karen W. Murphy
Attorney

JANUARY 13, 2020
BOARD OF DIRECTORS MEETING
AGENDA ITEM # 17

TITLE: **Consider and Adopt a Resolution to Certify Union Sanitary District's Sewer System Management Plan (SSMP)** ***(This is a Motion Item)***

SUBMITTED: Paul R. Eldredge, General Manager/District Engineer
James Schofield, Collections Services Work Group Manager
Jose Rodrigues, MTV Team Coach

Recommendation

Staff recommends the Board Adopt a Resolution to Certify Union Sanitary District's Sewer System Management Plan as required by the California State Water Resources Control Board (SWRCB) every five years.

Previous Board Action

07/09/2012 Board Meeting – Approval of SSMP
07/09/2012 Board Meeting – Adopted Resolution No.2682 to Certify Current SSMP

Background

The California State Water Resources Control Board ("SWRCB") implemented a waste discharge requirement ("WDR") permit on May 2, 2006 to regulate sanitary sewer systems. This permit is known as SWRCB Order No. 2006-0003, Statewide General Waste Discharge Requirements for Sanitary Sewer Systems. On July 30, 2013, SWRCB adopted a new Monitoring and Reporting Program for Sanitary Sewer Systems. This was known as SWRCB Attachment A, Order No. WQO 2013-0058-EXEC effective on September 9, 2013.

This permit, among other things, requires local public sewer collection system agencies, referred to as "Enrollees," to develop a Sewer System Management Plan ("SSMP"). SSMPs must be self-audited at least every two (2) years and updated every five (5) years from the previous adoption date.

The five-year SSMP update must also be approved by the governing body of the enrollee. The State or Regional Water Boards do not review or approve SSMP's, but require enrollees to make it publicly available, and upload an electronic copy to the SSO database or provide a link to the Enrollees' website where the SSMP is posted.

Since the last SSMP was Re-certified by the Board in 2012 there has been some major updates.

- In 2017 Our Standard Specification and Information Bulletin – Establishes design and construction standards
- In July of 2019 Ordinance 34.08 – Provides for Plan Review, Issuance of Construction Permits, Inspection of Sewerage Installation, and the Collection of Fees for these services – Address access, laterals, and enforcement
- In August of 2019 Ordinance 36.04 – Pretreatment Ordinance and Technically Based Local Limits – Addresses illicit discharges, prohibited discharges, and enforcement
- Fiscal Operating Budget for FY 2020
- Collections Services Division Preventative Maintenance Program schedule
    - Annual cleaning and inspection of all pipe except plastic pipe moved from a 72 to 84-month cycle. PVC pipe is on a 14-year cycle.
    - Creating an additional 7th area
    - Updating the root control program to include an additional area.
- Establish an annually Easement Maintenance Program
- The District completed 3 Sewer Master Plans, 1 for each Basin.

In short, an SSMP is an Operating Manual for the Districts Collection System.

Attachment: Resolution Approving the Union Sanitary District Sewer System Management Plan in Accordance with the California Water Resources Control Board Statewide General Waste Discharge Requirement

RESOLUTION NO. 2878

APPROVING THE UNION SANITARY DISTRICT SEWER SYSTEM MANAGEMENT PLAN IN ACCORDANCE WITH THE CALIFORNIA WATER RESOURCES CONTROL BOARD STATEWIDE GENERAL WASTE DISCHARGE REQUIREMENT

WHEREAS, the District owns, operates and maintains a system of over 834 miles of sanitary sewer pipelines; and

WHEREAS, as environmental stewards of the system for the Cities of Fremont, Newark and Union City it is USD's responsibility to effectively monitor, maintain and manage the capacity of the sewer system; and

WHEREAS, the State of California Water Resources Control Board has adopted Order No. 2006-0003, Statewide General Waste Discharge Requirement (WDR) for Wastewater Collection Agencies; and

WHEREAS, the WDR requires the preparation of a Sewer System Management Plan (SSMP) by every Wastewater Collection Agency; and

WHEREAS, the SSMP has been certified by staff to be in compliance with the requirements set forth by the Statewide General WDR; and

WHEREAS, the WDR requires that the Governing Board of each Wastewater Collection Agency must approve the SSMP at a public meeting;

* * * * *

NOW THEREFORE BE IT HEREBY CERTIFIED by the Board of Directors of Union Sanitary District, that the Board approves and adopts this Sewer System Management Plan dated January 9, 2020.

On motion duly made and seconded, this resolution was adopted by the following vote on January 13, 2020.

AYES: Fernandez, Handley, Kite, Lathi, Toy

NOES: None

ABSENT: None

ABSTAIN: None

Jennifer Toy, President
Board of Directors
UNION SANITARY DISTRICT

Attest:

Pat Kite, Secretary
Board of Directors
UNION SANITARY DISTRICT